BIDDING INSTRUCTIONS
&
FORMS

Highland West Junior High Classroom Additional
901 N. Santa Fe
Moore, Oklahoma 73160

OMNI CONSTRUCTION
1909 S Eastern Ave Moore, OK 73160

TABLE OF CONTENTS

Highland West Junior High Classroom Addition

Division 0	Bidding Instructions and Forms	Page 3
Document 100	Solicitation for Bids (State of Oklahoma Form)	Page 4
Document 200	Instructions to Bidders	Page 6
	1) Solicitation	Page 7
	2) Bid Documents and Contracts Documents	Page 8
	3) Site Assessment	Page 9
	4) Qualifications	Page 10
	5) Bid Submissions	Page 10
	6) Bid Enclosure/Requirements	Page 11
	7) Offer Acceptance/Rejection	Page 12
Document 300	Bid Forms	Page 13
	1) General Bid Form	Page 13
	2) Non-Collusion Affidavit	Page 16
	3) Non-Kickback Affidavit	Page 16
	4) Non-Asbestos Affidavit	Page 17
	5) Non-Sex Offender Affidavit	Page 18
	6) Business Relationship Affidavit	Page 19
Document 400	General Bid Package Items	Page 20
	1) General	Page 20
	2) Project Schedule	Page 21
	3) Safety	Page 22
Document 500	Bid Package 1 thru 16	Page 23
	1) Sitework	Page 23
	2) Concrete	Page 24
	3) Masonry	Page 26
	4) Metals (Materials Only)	Page 27
	5) Wood & Plastic	Page 28
	6) Thermal & Moisture Protection	Page 29
	7) Doors & Hardware	Page 30
	7B) Entrances & Storefronts	Page 31
	8) Finishes (Ceiling Systems)	Page 32
	9) Specialties (Accessories)	Page 33
	10) Flooring	Page 34
	11) Painting	Page 35
	12) Fire Suppression	Page 36
	13) Mechanical	Page 37
	14) Plumbing	Page 38

15) Electrical/Cabling/IT Page 40

16) Metals/Steel (Erect Only) Page 42

Highland West Junior High Classroom Additional
901 N. Santa Fe
Moore, Oklahoma 73160

Division 0
Bidding Instructions
&
Forms

ARCHITECT OF RECORD:

AGP – the Abla Griffin Partnership, LLC
201 N. Broadway, Suite 210
Moore, OK 73160 405-735-3477

CONSTRUCTION MANAGER:

OMNI Construction, LLC
1909 S. Eastern Ave.
Moore, OK 73160 405- 735-3992

DOCUMENT 100

SOLICITAITON FOR BIDS
(BID NOTICE)

Sealed proposals will be received by the Board of Education, Independent School District No. I-002, Moore, Cleveland County, Oklahoma, at the Moore Public Schools Administration Service Center, 1500 SE 4th Street, Moore, Oklahoma, until 2:00 P.M., Central Standard Time, on 24th, day of October 2023, at which time said bids will be opened for furnishing all labor and materials for the construction of the Highland West Junior High Classroom Addition including the following Bid Packages:

Bid Package 1 – Demo/Sitework
Bid Package 2 – Concrete
Bid Package 3 – Masonry
Bid Package 4 – Metal (Material Only)
Bid Package 5 – Wood & Plastic
Bid Package 6 – Thermal & Moisture Protection
Bid Package 7 – Doors & Hardware
Bid Package 7B – Entrances & Storefronts
Bid Package 8 – Finishes (Ceiling Systems)
Bid Package 9 – Specialties (Accessories)
Bid Package 10 – Flooring
Bid Package 11 – Painting
Bid Package 12 – Fire Suppression
Bid Package 13 – Mechanical
Bid Package 14 – Plumbing
Bid Package 15 – Electrical/Cabling/IT
Bid Package 16- Metal/Steel (Erect Only)

Bids received more than ninety-six (96) hours, excluding Saturdays, Sundays, and holidays, before the time set for opening bids, as well as bids received after the time set for opening bids, will not be considered, and will be returned unopened.

Bids will be publicly opened and read aloud at the above-mentioned office immediately following the closing time stated above.

Complete sets of General Conditions, Plans, and Specifications, and other bidding documents may be obtained through OMNI Construction, LLC, and the RPG Plan Room.

OMNI Construction
1909 S. Eastern Ave.
Moore, OK 73160
405-799-3992
www.omnioklahoma.com

RPG Plan Room
www.rpgplanroom.com

A cashier's check, a certified check, or a surety bond in the amount of five percent (5%) of the bid shall accompany the sealed proposal of each bidder if the proposal is $50,000.00 or larger. Bid Guarantees will be returned to the unsuccessful bidders.

The Board of Education reserves the right to accept or reject any and all bids.

The time period within which a contract will be executed following award to the successful bidder will not exceed thirty (30) days.

DOCUMENT 200

INSTRUCTIONS TO BIDDERS

To be considered, bids must be made in accordance with these instructions to bidders.

Section 1 Solicitation

1) Bid Submission
2) Intent
3) Work Identified in the Contract Documents
4) Contract Time

Section 2 Bid Documents and Contract Documents

1) Definitions
2) Contract Documents Identification
3) Availability
4) Examination
5) Queries/Addenda
6) Product Substitution

Section 3 Site Assessment

1) Site Examination

Section 4 Qualifications

1) Evidence of Qualifications
2) Subcontractors/Suppliers/Others

Section 5 Bid Submission

1) Submission Procedure
2) Bid Ineligibility

Section 6 Bid Enclosure/Requirements

1) Security Deposit
2) Performance Assurance
3) Bid Form Requirements
4) Bid Form Signature

Section 7 Offer Acceptance/Rejection

1) Duration of Offer
2) Acceptance of Offer

Section 1-
SOLICITATION

1.1) BID SUBMISSION

A. Sealed proposals will be received by the Board of Education, Independent School District No. I-002, Moore, Cleveland County, Oklahoma, at the Moore Public Schools Administration Service Center, 1500 SE 4th Street, Moore, Oklahoma, until 2:00 P.M., Central Standard Time, on Tuesday, October 24th, 2023, at which time said bids will be opened for furnishing all labor and materials for the complete construction of the Highland West Junior High Classroom Addition.

Bid Packages:
Bid Package 1 – Demo/Sitework
Bid Package 2 – Concrete
Bid Package 3 – Masonry
Bid Package 4 – Metal (Material Only)
Bid Package 5 – Wood & Plastic
Bid Package 6 – Thermal & Moisture Protection
Bid Package 7 – Doors & Hardware
Bid Package 7B – Entrances & Storefronts
Bid Package 8 – Finishes (Ceiling Systems)
Bid Package 9 – Specialties (Accessories)
Bid Package 10 – Flooring
Bid Package 11 – Painting
Bid Package 12 – Fire Suppression
Bid Package 13 – Mechanical
Bid Package 14– Plumbing
Bid Package 15 – Electrical/Cabling/IT
Bid Package 16 – Metal/Steel (Erect Only)

B. Bids received more than ninety-six (96) hours, excluding Saturdays, Sundays, and holidays, before the time set for opening bids, as well as bids received after the above time set for opening bids, will not be considered, and will be returned unopened.
C. All forms identified in Section 300 shall be properly filled out and notarized.
D. Bids will be publicly opened and read aloud at the above-mentioned office immediately following the closing time stated above.
E. Amendments to submitted Bids will be permitted when received in writing prior to bid deadline and when endorsed by the same party or parties who signed and sealed the Bid.
F. Bidders may withdraw their Bid by written request at any time before bid deadline.

1.2) INTENT

A. The intent of this bid request is to obtain an offer to perform work to complete the construction of the Highland West Junior High Classroom Addition, 901 N. Santa Fe, Moore, OK 73160, for a Stipulated Price contract, in accordance with the Contract Documents.
B. The Owner has contracted with OMNI Construction to act as Construction Manager for the total Project. Selected parts of the work of the Project may be completed by the Construction Manager and other parts may be contracted by acceptance of public bids.

1.3) WORK IDENTIFIED IN THE CONTRACT DOCUMENTS

A. Work of this proposed Contract comprises of bid package 1 thru 16 as noted in the Bid Manual
B. The Scope of the work consists of furnishing all labor and materials for the complete construction, in accordance with the Contract Documents,
C. The Base Proposal shall include all work as described in the Drawings, Project Manual and bid day instructions and forms. Each trade shall be responsible to review all sheets identified in the plan set and work that may pertain to their respected bid package.

1.4) CONTRACT TIME

A. Construction Start Date = November 15, 2023
B. Construction Completion Date = August 11, 2024

Section 2
BID DOCUMENTS AND CONTRACT DOCUMENTS

2.1) DEFINITIONS

A. Bid Documents: Project Plans, Project Manual, Bidding Instructions and Forms.
B. Bid: Executed Bid Form and required attachments submitted in accordance with these Instructions to Bidders.
C. Bid Price: Monetary lump sum identified by the Bidder in the Bid Form.

2.2) CONTRACT DOCUMENTS IDENTIFICATION

A. The Contract Documents (Drawings and Project Manual) are identified as prepared by the Architect, AGP – the Abla Griffin Partnership, LLC, and identified in their respective Table of Contents.

2.3) AVAILABILITY

A. Refer to section 2.4- for availability of drawings.

2.4) EXAMINATION

A. Bid Documents are on display at the offices of the following construction association plan room facilities:
[1] OMNI Construction, LLC
1909 S. Eastern Ave.
Moore, OK 73160 405-
735-3992
www.omnioklahoma.com

[2] RPG Plan Room
www.rpgplanroom.com

B. Upon receipt of Bid Documents verify that documents are complete. Notify the Architect or Construction Manager, OMNI Construction, LLC, should the documents be incomplete.

C. Immediately notify the Architect or Construction Manager upon finding discrepancies or omissions in the Bid Documents.

2.5) QUERIES/ADDENDA

A. Direct questions to AGP – the Abla Griffin Partnership L.L.C., 201 N Broadway, Suite 210, Moore, Oklahoma 73160, 405-735-3477 or AGP@theAGP.net. OMNI Construction, LLC, PO Box 892245 Oklahoma City, OK 73189, 405-735-3992 or omniconstructionllc@coxinet.net.
B. Verbal answers are not binding on any party.
C. Submit questions not less than 3 days before date set for receipt of Bids. Replies will be made by Addenda.
D. Addenda may be issued during the Bidding period. Addenda becomes part of the Contract Documents. Include resultant costs in the Bid Price.
E. List any addenda received on the Bid Form. Failure to receive any addenda shall not release the bidder from any obligations under his bid.

2.6) PRODUCT SUBSTITUTION

A. Where the Bid Documents stipulate a particular Product, substitutions will be considered by the Architect up to seven (7) days before receipt of Bids.
B. With each substitution request, provide sufficient information for Architect to determine acceptability of proposed products.
C. When a request to substitute a Product is made, Architect may approve the substitution. Approved substitutions will be identified by Addenda.
D. In submission of substitutions to products specified, Bidders shall include in their Bid, any changes required in the Work to accommodate such substitutions. Later claims by the Bidder for an addition to the Contract Time or Contract Sum/Price because of changes in Work necessitated by use of substitutions shall not be considered.

Section 3
SITE ASSESSMENT

3.1) SITE EXAMINATION

A. Examine the project site before submitting a Bid.
B. Each bidder shall carefully examine the project site, compared it to the Drawings and Project Manual, including all Addenda, and satisfied themself as to the existing conditions under which their trade will be required to work, or that will affect the work under this contract.
C. No allowances will be made on behalf of the Contractor for any error or negligence in determining these existing conditions. By submission of a bid on this project, the bidders agree to accept the existing project site in its present condition.
D. Any and all site visits shall be scheduled though the Project Manager of record, OMNI Construction, LLC 405-735-3992.

Section 4
QUALIFICATIONS

4.1) EVIDENCE OF QUALIFICATIONS

A. To demonstrate qualifications for performing the Work of this Contract, Bidders may be required to submit in writing evidence of financial position, previous experience, and current commitments. The financial statement shall reflect the true financial condition of the bidder within three months prior to the date of the bid opening. To be eligible for the Contract a bidder, must be able to show his financial ability to carry on work until such time as he receives the first payment on the Contract agreement, and to finance the work between payments until the project is complete and accepted by the Owner.

4.2) SUBCONTRACTORS/SUPPLIERS/OTHERS

A. The Owner reserves the right to reject a proposed Subcontractor for reasonable cause.
B. Refer to OMNI Construction's Master Service Agreement when OMNI is Construction Manager.

Section 5
BID SUBMISSION

5.1) SUBMISSION PROCEDURE

A. Bidders shall be solely responsible for the delivery of their Bids in the manner and time prescribed.
B. **Submit one copy of the executed offer on the Bid Forms provided, signed, and sealed with the required security in a closed opaque envelope, clearly identified with Bidder's name, project name, Owner's name, Bid Manual 1, Bid Package Number and Description, and Bid Date on the outside of the envelope.**
C. Contents of the Proposal Packet:
   1. Complete Bid Forms (Document 300).
   2. Non-collusion Affidavit signed and notarized.
   3. Non-Kickback Affidavit signed and notarized.
   4. Affidavit of Asbestos Free Materials and Construction signed and notarized.
   5. Non-Sex Offender Affidavit signed and notarized.
   6. Business Relationship Affidavit signed and notarized.
   7. A cashier's check, a certified check, or surety bond.
D. An abstract summary of submitted Bids will be made available to all Bidders following Bid opening.

5.2) BID INELIGIBILITY

A. Bids that are unsigned, improperly signed or sealed, conditional, illegible, obscure, contain arithmetical errors, erasures, alterations, or irregularities of any kind, may be declared unacceptable at Owner's discretion.
B. Bid Forms, Appendices, and enclosures which are improperly prepared, may at the discretion of the Owner, be declared unacceptable.
C. Failure to provide security deposit, bonding or insurance requirements will, at the discretion of the Owner, invalidate the Bid.

Section 6
BID ENCLOSURES/REQUIREMENTS

6.1) SECURITY DEPOSIT

A. Bids shall be accompanied by a security deposit if more than $50,000.00 for a sum not less than five percent (5%) of the Bid Price/Sum submitted, as a guarantee that the successful bidder will properly execute a Contract and file performance assurance bonds within seven (7) days of the date of notification of award, as follows:
   1. Bid Bond or
   2. Certified or cashier's check.

B. Should the successful bidder fail to enter into a Contract Agreement or to comply with the specified requirements, the bidder's check or bond will become the property of the Owner as liquidated damages, but not as penalty.

C. Endorse the Bid Bond in the name of the Owner as obliged, signed, and sealed by the Contractor as principal and the Surety. Surety Bonds shall be issued by a surety licensed to conduct business in the State of Oklahoma and shall be accompanied by the bond agent's power-of-attorney.

D. Endorse the certified or cashier's check in the name of the Owner.

E. The security deposit will be returned after delivery to the Owner of the required Performance and Statutory Payment Bonds by the accepted Bidder.

F. The security deposit will be returned after delivery to the Owner of the required Performance and Labor and Material Payment Bond(s) by the accepted Bidder.

G. Include the cost of Bid Security in the Bid Price.

H. After a bid has been accepted, all securities will be returned to the respective Bidders and other requested enclosures.

I. If no contract is awarded, all security deposits will be returned.

6.2) PERFORMANCE ASSURANCE

A. Accepted Bidder: Provide Performance and Statutory Bonds in one hundred percent (100%) of the contract amount covering faithful performance of the contract, and payment of all obligations arising there-under, will be required by the Owner.

B. Provide a Defect Bond in the amount of one hundred percent (100%) of the contract amount covering defective workmanship and materials for a period of one year after the acceptance of the project.

C. Include the cost of performance assurance bonds in the Bid Price.

D. Oklahoma law allows substitution of an Irrevocable Letter of Credit is included herewith. One such letter shall be required for each of the bonds noted above.

E. Construction Manager reserves the right to enforce or waive the surety bond requirements.

6.3) BID FORM REQUIREMENTS

A. Complete all requested information in Section 300 of the Bidding Instructions and Forms.

6.4) BID FORM SIGNATURE

A. The Bid Form shall be signed by the Bidder, as follows:
   1. Sole Proprietorship: Signature of sole proprietor in the presence of a witness who will also sign. Insert the words "Sole Proprietor" under the signature.
   2. Partnership: Signature of all partners in the presence of a witness who will also sign. Insert the word "Partner" under each signature.

3. Corporation: Signature of a duly authorized signing officer(s) in their normal signatures. Insert the officer's capacity in which the signing officer acts, under each signature. Affix the corporate seal. If the Bid is signed by officials other than the President and Secretary of the company, or the President/Secretary/Treasurer of the company, a copy of the by-law resolution of the Board of Directors authorizing them to do so, must also be submitted with the Bid Form in the Bid Envelope.
4. Joint Venture: Each party of the joint venture shall execute the Bid Form under their respective seals in a manner appropriate to such party as described above, similar to the requirements of a Partnership.

Section 7
OFFER ACCEPTANCE/REJECTION

7.1) DURATION OF OFFER

A. Bids shall remain open to acceptance and shall be irrevocable for a period of thirty (30) days after the Bid closing date.

7.2) ACCEPTANCE OF OFFER

A. The Owner reserves the right to accept or reject any or all bids, or to accept any bid he considers advantageous and to waive formalities and irregularities.
B. The Owner reserves the right to disqualify bids, before and after opening, upon evidence of collusion with intent to defraud or other illegal practices upon the part of the bidder.
C. The Contract will be awarded based on the lowest responsible bid.
D. In case of a difference in written words and figures on the Bid Form, the amount stated in written words shall govern.
E. After acceptance by the Owner, the Architect, on behalf of the Owner, will issue to the successful Bidder, a written Notice to Proceed.
F. The time Period within which a contract will be executed following award to the successful bidder will not exceed thirty (30) days.
G. In the event of a tie bid the coin toss method will be administered by the Construction Manager to determine the successful bidder.

DOCUMENT 300

BID FORMS

PROJECT NAME: Highland West Junior High Classroom Addition

DATE OF BID OPENING: _____

COMPANY NAME: _____
COMPANY ADDRESS: _____
CONTACT NAME: _____
TELEPHONE NUMBER: _____
FAX NUMBER: _____
EMAIL ADDRESS: _____

PACKAGE NO. / DESCRIPTION	COMPLETE DESCRIPTION AS TO SCOPE OF WORK	AMOUNT

****Any proposal containing clarifications or exclusions shall not be considered.**

Base Bid: _____(Written Words)

$_____(Numeric Form)

IT IS UNDERSTOOD THE BASE BID DOES NOT INCLUDE THE COST OF THE PERFORMANCE BOND COVERING 100% OF THE COTRACT AMOUNT. PRIOR TO AWARD, THE OWNER AND CONTRACTOR RESERVE THE RIGHT TO ADD A PERFORMANCE BOND FROM THE TRADE CONTRCT AGREEMENT. PLEASE INDICATE THE FOLLOWING INFORMATION WITH REGARDS TO YOUR PERFORMANCE BOND:

PERFORMANCE BOND RATE (%): _____

COST OF PERFORMANCE BOND ($):_____(Dollars)

Alternates:

Description of Alternate: _____

Add or Deduct: _____

**Please note that any and all items of the given package which are not specifically excluded in the bid document will be considered to be a part of the bid package.

SIGNATURE OF BIDDING PARTY DATE

By initialing the line next to each item below you are acknowledging that you have included the following items:

_____ A cashier's check, a certified check, or a surety bond if bid is $50,000 or greater.

_____ Non-Collusion Affidavit (Signed and Notarized)

_____ Non-Kickback Affidavit (Signed and Notarized)

_____ Affidavit of Asbestos Free Materials and Construction (Signed and Notarized)

_____ Non-Sex Offender Affidavit (Signed and Notarized)

_____ Business Relations Affidavit (Signed and Notarized)

_____ Acknowledge receipt of Addenda Numbers _ through __ issued for bidding.

SUBMITTED BY:

COMPANY NAME: _____

FULL PRINTED NAME: _____

SIGNATURE: _____

DATE: _____

NON-COLLUSION AFFIDAVIT

STATE OF_____)

)ss.

COUNTY OF _____)

_____, of lawful age, being first duly sworn on oath says that (s)he is the agent authorized by the bidder to submit the attached bid. Affiant further states that the bidder has not been a party to any collusion among bidders in restraint of freedom of competition by agreement to bid at a fixed price or to refrain from bidding; or with any state official or employee as to quantity, quality or price in the prospective contract, or any other terms of said prospective contract; or in any discussions between bidders and any state official concerning exchange of money or other things of value for special consideration in the letting of contract.

Subscribed and sworn to me before this _____ day of _____, 20____

_____
Notary Public

My Commission Expires:

_____

300-2

NON-KICKBACK AFFIDAVIT

COMPANY NAME: _____

As required by Oklahoma State Statutes, Title 62, § 310.9, any contract for $25,000.00 or more for the purchase of materials, goods, or services, must be accompanied by the signed statement described below. Please sign this statement as indicated below and return to Moore Public Schools at the address shown below.

MOORE PUBLIC SCHOOLS
Attn: Purchasing Department
1500 S.E. 4th Street
Moore, OK 73160-8232

The undersigned (architect, contractor, supplier, or engineer), of lawful age, being first duly sworn on oath says that this contract is true and correct. Affiant further states that the (work, services, or materials) will be (completed or supplied) in accordance with the plans, specifications, orders, or requests furnished the affiant. Affiant further states that (s)he has made no payment directly or indirectly to any elected official, officer, or employee of the State of Oklahoma, any county or local subdivision of the state, of money or any other thing of value to obtain or procure the contract or purchase order.

_____
(Signature of contractor, supplier, engineer, or architect)

Subscribed and sworn to me before this _____ day of _____, 20___

_____
Notary Public

My Commission Expires: _____

300-3

NON-ASBESTOS AFFIDAVIT

STATE OF OKLAHOMA _____)

SS)

COUNTY OF _____)

_____, of lawful age, being first duly sworn, on oath says that (s)he is the agent authorized by bidder to submit the attached bid. Affiant further states that the bidder has not included as a part of the bid and will not include in the finished construction, nor will said bidder allow any subcontractor or workman to include in the finished construction, any material which contains asbestos in any form in the amount equal to or in excess of the one percent (1%) by weight or volume.

Subscribed and sworn to me before this _____ day of _____, 20_____

_____

Notary Public

My commission Expires:

_____

NON-SEX OFFENDER AFFIDAVIT

The undersigned, _____ represents that he/she is the owner or an officer of _____, who has the authority to make this declaration to Moore Public Schools, as required by Section 6-101.48 of Title 70 of the Oklahoma Statutes.
I declare that no employee on school premises during normal working hours under the authority of the above-named company or business has been convicted in the State, the United States, or another state of any se offense subject to the sex Offenders Registration Act or is subject to other states or the federal sex offender registration provisions.

I further declare that no employee working on school premises during normal working hours under the authority f the above-named company or business has been convicted of a felony offense within the past ten (10) years in this State the United States, or another state.

I further understand that Title 57, Oklahoma Statutes, Section 589 provides as follows, to wit:
It is unlawful for any person registered pursuant to the Sex Offenders Registration Act to work with or provide services to children or to work on school premises, or for any person or business who offers or provides services to children or contracts for work to be performed on school premises to knowingly and willfully allow any employee to work with children or to work on school premises who is registered pursuant to the Sex Offenders Registration Act. Upon conviction for any violation of the provisions of the subsection, the violator shall be guilty of a misdemeanor punishable by a fine not to exceed One Thousand Dollars ($1,000.00). In addition, the violator may be liable for civil damages.

Dated this_____ day of_____, 20__

Vendor / Contractor's Name and Address

_____
_____
_____

_____
Authorized Signer

Subscribed and sworn to me before this _____ day of _____, 20____

_____
Notary Public

My Commission Expires:

_____

300-5

Business Relations Affidavit

State of _____

)ss.

County of _____

_____, of lawful age, being first duly sworn on oath that (s)he is the agent authorized by the bidder to submit the attached bid. Affiant further states that the nature of any partnership, joint venture, or other business relationship presently in effect of which existed within one (1) year prior to the date of this statement which the architect, engineer, or other part of the project is as follows:

_____

_____

Affiant further states that any such business relationship presently in effect or which existed within one (1) year prior to the date of this statement between any official or director of the architectural or engineering firm or any other party to the project is as follows:

_____

_____

Affiant further states that the names of all persons who have any such business relationship and the positions they hold with their respective companies or firms are as follows:

_____

_____

(If none of the business relationships hereinabove mentioned exists, affiant should so state)

Name:_____

Title:_____

Subscribed and sworn before me this_____day of_____, 20___

_____

Notary Public

My Commission Expires:_____

300-6

DOCUMENT 400

GENERAL BID PACKAGE ITEMS

Each Bid Package shall include, but is not necessarily limited to the following General Bid Package Items:

Section1-
General

A. Subcontractor acknowledges that they have performed an onsite investigation, if desired, of the site conditions and acknowledges that all activities must be performed in close coordination with other Subcontractors. The Subcontractor shall be responsible for all means and methods for performing the work according to the contract documents, site conditions, and all applicable codes.

B. Subcontractor shall comply with all provisions of the OMNI Construction contract, insurance, safety, and EEOC requirements.

C. In addition to the Conditions of Specification, drawings, submittals, and Closeout Submittals the Subcontractor shall provide the following:

- Each Submittal shall be submitted under separate coversheet indicating the specific Specification Section to which it pertains.
- Subcontractor shall submit three (3) hard copies and one (1) digital copy of each submittal.
- Subcontractor shall submit two (2) hard copies and one (1) digital copy of Close-out Documents.

a. Subcontractor shall be responsible for timely submission of all submittals, including but not limited to: shop drawings, samples, product data sheets MSDS information, and all other submittals required by the contract documents.

b. Miscellaneous – This contract will be provided by OMNI Construction. All warranties and guarantees are to be transferred to Owner at the completion of this project.

c. Subcontractor shall sequence work as directed by OMNI without exception.

d. All correspondence for this project shall be directed to the designated Project Manager – OMNI Construction.

e. Coordination – Subcontractor shall have a designated Project Superintendent who will regularly attend construction meetings as required involving this project. The Superintendent/representative attending the meeting shall have the authority and ability to make binding commitments regarding the timing of the performance of Subcontractor's work. Subcontractor, Field Project Manager or Superintendent may not be changed without mutual agreement with OMNI Construction. Subcontractor shall attend all schedule related meetings to coordinate access to work areas with the other Subcontractors, OMNI Construction and Owner work forces that are on site.

f. Subcontractor shall engage a qualified surveyor to establish exact points to act as working points as needed. Subcontractor shall include the cost to resurvey as needed to establish final dimensions and protect and maintain working points and survey control points from disturbance caused during construction. Construction Manager will provide two (2) Benchmarks to establish the layout.

g. Subcontractor shall include all layout and field dimensions associated with this work.

h. Subcontractor shall coordinate delivery of materials. Subcontractor shall provide equipment and personnel necessary to unload, stack, and store onsite. Subcontractor shall inventory all delivered items and inspect for damage or missing items. Any damaged or missing items shall be noted on the Bill of Lading. Subcontractor shall notify suppliers and arrange for replacement items to be shipped. Subcontractor shall file all damage claims with insurance carriers. Placement of staged items shall be coordinated with OMNI Construction.

i. Subcontractor shall be responsible for any damage caused by the Subcontractor to any adjoining areas that remain.

j. Subcontractor shall pay for all repairs to other Subcontractor's work damaged by contractor's personnel, suppliers, or subcontractors during construction.

k. Subcontractor shall be responsible for daily clean-up to include but not limited to: Removal and/or proper storage of tools, equipment, and materials as required by the Construction Manager, disposal of scrap and waste material, and the sweeping of any dust and dirt generated by construction activities, including general foot traffic of the subcontractor. All debris will be removed from the working area and deposited in the dumpster or proper location by the subcontractor, as directed by the Construction Manager.

l. Subcontractor is responsible for the proper back fill and testing of work put in place by the subcontractor in accordance with specification section 02200 Earthwork.

m. Subcontractor is responsible for fire caulking and sealing of all penetrations, with an equal fire rating to that of the wall being penetrated by the subcontractor's work.

Section 2-
Project Schedule

Project Sequence: Bidders will be required to adhere to the project schedule, which will be provided by OMNI Construction. Work will be performed as required to meet the overall completion date.

A. The Subcontractor agrees that it will provide adequate manpower to complete the Subcontractor's Work in accordance with the time established by the Schedule during regular working hours. The Schedule is based on a 40-hour work week. The Work Week is Monday – Friday, from 7:00 a.m. – 4:00 p.m. It shall be the Subcontractor's responsibility to meet the Schedule. Any cost associated with additional manpower and or overtime hours required to meet the schedule are the responsibility of the Subcontractor. In addition, the Subcontractor will be liable to the Construction Manager in connection with any overtime required to meet the schedule due to Subcontractor's inability to meet the schedule during regular hours, including but not limited to, additional supervision and a reasonable markup for overhead and profit.

B. Off hour and or Overtime may be required to complete select activities as may be directed by the Construction Manager and or Owner to meet the need of the school. These activities will be scheduled in advance.

C. It shall be the responsibility of Subcontractor to provide in writing the following information on a weekly basis, in order to update the Master Project Schedule:

- Detailed Schedule including activities, anticipate durations and man loading
- Subcontractor's daily report shall be submitted to OMNI Project Superintendent
- Planned crew size and man-hours by week
- Actual crew size and man-hours expended by week
- Planned units by week
- Actual units installed by week

D. Subcontractor shall provide an estimated man-loading curve for the duration of the project. This curve will be used as a guide for man loading throughout project. Subcontractor shall coordinate with OMNI Construction to refine the schedule for manpower loading and timely completion of the project. This responsibility will be ongoing as updates are required.

Section3- Safety

3.1 Subcontractor shall implement a safety program meeting or exceed the requirements set forth by OSHA.

3.2 High visibility clothing and proper PPE will be required 100% of the time for the duration of this project.

DOCUMENT 500
BID PACKAGE 1-16

BID PACKAGE 1: DEMO/SITEWORK

Project: **Highland West Junior High Classroom Addition**
Location: **901 N. Santa Fe, Moore, OK 73160**

Specification Section	Description	
Division 0	Bidding & Contract Documents	Complete
Division 1	General Requirements	Complete
Section 024116	Demolition	As applicable to Site Prep and Concrete
Section 311000	Site Clearing	As applicable to Site Prep
Section 312000	Earth Moving	As applicable to Site Prep and Concrete
Section 329200	Turfs & Grasses	As applicable to Landscape Grading

This bid package shall include all labor, materials, equipment, services, insurances, and incidentals for the DEMO/SITEWORK BID PACKAGE, including work from referenced specifications and other work normally associated with this trade.

The scope of work shall include all General Bid Package Items as listed in section 400 of Division 0 of the bid manual and shall also include, but not be limited to the following items:

1. Furnish labor, materials, and equipment necessary to complete demo/site preparation, temporary erosion control, landscape grading, and earthwork as it is applicable to Concrete.

2. Testing to be paid for by others, but to be coordinated by contractor.

3. Include all dewatering required to perform this scope of work.

4. Provide construction entrance and material lay down area.

5. Earthwork as it is applicable to Concrete & Landscape Grading.

6. All miscellaneous equipment and material required for the proper completion of this scope of work.

7. Subcontractor is to ensure that all elevated work areas are made ready to protect all areas below and have OSHA approved fall protection for work to proceed.

BID PACKAGE 2: CONCRETE

Project: **Highland West Junior High Classroom Addition**

Location: **901 N. Santa Fe, Moore, OK 73160**

Specification Section	Description	
Division 0	Bidding & Contract Documents	Complete
Division 1	General Requirements	Complete
Section 03300	Cast-In-Place Concrete	Complete
Section 06100	Rough Carpentry	As applicable to concrete
Section 07200	Insulation	As applicable to concrete
Section 07260	Vapor Barrier	As applicable to concrete
Section 313116	Termite Control	As applicable to concrete
Section 321313	Concrete Paving Curb & Sidewalks	As applicable to concrete
Section 321373	Concrete Paving Joint Sealants	As applicable to concrete

This bid package shall include all labor, materials, equipment, services, insurances, and incidentals for the CONCRETE BID PACKAGE, including work from referenced specifications and other work normally associated with this trade.

The scope of work shall include all General Bid Package Items as listed in section 400 of Division 0 of the bid manual and shall also include, but not be limited to the following items:

1. Furnish and install all concrete complete.
2. Furnish and install all rebar, dowels, and accessories associated with concrete. Furnish and maintain all rebar caps on dowels until next trade begins tie in. **(Rebar associated with Masonry will be provided and installed in Masonry Bid package.)**
3. Furnish and install all required formwork.
4. Excavate and fill as required for all concrete work.
5. Furnish all sand & gravel base required for concrete work.
6. Include all necessary layout and surveying from a provided benchmark for concrete work.
7. Include all soil - termite treatments as applicable to Concrete work.
8. Testing to be paid for by others but coordinated by contractor.
9. Include all concrete related weather and temperature protection.
10. Include all dewatering required to perform this scope of work.
11. Include concrete repairs including but not limited to patching, rubbing, grinding, fill, sandblast, and caulk

as indicated on the drawings and specifications.

12. Furnish and install board insulation under slab and at foundation perimeter per plans and specifications.

13. All miscellaneous equipment and material required for the proper completion of this scope of work.

14. Subcontractor is to ensure that all elevated pours are made ready to protect all areas below and have OSHA approved fall protection for work to proceed.

15. Furnish and install sidewalks/paving as detailed.

BID PACKAGE 3: MASONRY

Project: **Highland West Junior High Classroom Addition**

Location: **901 N. Santa Fe, Moore, OK 73160**

Specification Section	Description	
Division 0	Bidding & Contract Documents	Complete
Division 1	General Requirements	Complete
Section 04810	Unit Masonry Assemblies	Complete
Section 04812	Thin Brick Veneer	Complete
Section 05500	Metal Fabrications	As Applicable to Masonry

This bid package shall include all labor, materials, equipment, services, insurances, and incidentals for the MASONRY BID PACKAGE, including work from referenced specifications and other work normally associated with this trade.

The scope of work shall include all General Bid Package Items as listed in section 400 of Division 0 of the bid manual and shall also include, but not be limited to the follow items:

1. Furnish and install all necessary materials to complete masonry work, inclusive of rebar related to masonry scope of work.

2. Provide all necessary equipment and materials required for completion of this scope of work.

3. Subcontractor to ensure that all elevated work areas are made ready to protect all areas below and have OSHA approved fall protection for work to proceed.

4. Install all loose steel lintels over openings.

BID PACKAGE 4: METALS (MATERIAL ONLY)

Project: **Highland West Junior High Classroom Addition**
Location: **901 N. Santa Fe, Moore, OK 73160**

Specification Section	Description	
Division 0	Bidding & Contract Documents	Complete
Division 1	General Requirements	Complete
Section 05120	Structural Steel	Material Complete
Section 05210	Steel Joists	Material Complete
Section 05310	Metal Deck	Material Complete
Section 05500	Metal Fabrications	As per plans and applicable

This bid package shall include all material, equipment, services, insurances, and incidentals for the METAL (MATERIAL ONLY) BID PACKAGE, including work from referenced specifications and other work normally associated with this trade.

The scope of work shall include all General Bid Package Items as listed in section 400 of Division 0 of the bid manual and shall also include, but not be limited to the following items:

1. Supply all structural steel framing, joist, and steel decking.
2. Supply all anchors for embedding into concrete.
3. Supply all anchors for embedding into masonry.
4. Supply all bridging and seats.
5. Supply all bearings and angles.
6. Supply all lintels.
7. Supply all required fasteners to include but not limited to bolts, nuts, lag bolts, machine screws, plain washers, drilled-in expansion bolts, toggle bolts, epoxy, anchors, screens, and concrete inserts as indicated in the documents.
8. Include delivery of all material associated with this bid package. Delivery must be coordinated with the Construction Manager and steel erector.
9. Supply all seismic bracing steel.

BID PACKAGE 5: WOOD & PLASTIC

Project: **Highland West Junior High Classroom Addition**

Location: **901 N. Santa Fe, Moore, OK 73160**

Specification Section	Description	
Division 0	Bidding & Contract Documents	Complete
Division 1	General Requirements	Complete
Section 06100	Rough Carpentry	As applicable to custom casework/millwork
Section 06200	Finish Carpentry	As applicable to custom casework/millwork
Section 06410	Custom Casework	Complete
Section 06420	Custom Laminate Casework (Contractor Option)	As applicable to custom casework/millwork

This bid package shall include all labor, materials, equipment, services, insurances, and incidentals for the WOODS & PLASTICS BID PACKAGE, including work from referenced specifications and other work normally associated with this trade.

The scope of work shall include all General Bid Package Items as listed in section 400 of Division 0 of the bid manual and shall also include, but not be limited to the following items:

1. Furnish and install all necessary materials to complete carpentry work.

2. Provide all necessary equipment and materials required for the proper completion of this scope of work.

3. Subcontractor to ensure that all elevated work areas are made ready to protect all areas below and have OSHA approved fall protection for work to proceed.

BID PACKAGE 6: THERMAL & MOISTURE PROTECTION

Project: **Highland West Junior High Classroom Addition**

Location: **901 N. Santa Fe, Moore, OK 73160**

Specification Section	Description	
Division 0	Bidding & Contract Documents	Complete
Division 1	General Requirements	Complete
Section 07100	Waterproofing	Complete
Section 07150	Damp proofing	Complete
Section 07200	Insulation	Complete except as to concrete, roofing and interior finish
Section 07840	Firestopping	Complete
Section 07900	Sealants	Complete

This bid package shall include all labor, materials, equipment, services, insurances, and incidentals for the THERMAL & MOISTURE PROTECTION BID PACKAGE, including work from referenced specifications and other work normally associated with this trade.

The scope of work shall include all General Bid Package Items as listed in section 400 of Division 0 of the bid manual and shall also include, but not be limited to the following items:

1. Furnish and install all necessary materials to complete the waterproofing/insulation/firestopping work.

2. Provide all necessary equipment and materials required for completion of this scope of work.

3. Subcontractor to ensure that all elevated work areas are made ready to protect all areas below and have OSHA approved fall protection for work to proceed.

BID PACKAGE 7: DOORS/HARDWARE (MATERIAL ONLY)

Project: **Highland West Junior High Classroom Addition**

Location: **901 N. Santa Fe, Moore, OK 73160**

Specification Section	Description	
Division 0	Bidding & Contract Documents	Complete
Division 1	General Requirements	Complete
Section 06100	Rough Carpentry	As applicable to this bid package
Section 06200	Finish Carpentry	As applicable to this bid package
Section 06300	Wood Treatment	As applicable to this bid package
Section 08100	Metal Doors and Frames	As applicable to this bid package
Section 08200	Wood Doors	As applicable to this bid package
Section 08700	Finish Hardware	As applicable to this bid package

This bid package shall include all labor, materials, equipment, services, insurances, and incidentals for the DOORS/HARDWARE BID PACKAGE, including work from referenced specifications and other work normally associated with this trade.

The scope of work shall include all General Bid Package Items as listed in section 400 of Division 0 of the bid manual and shall also include, but not be limited to the following items:

1. Furnish all wood and metal doors, frames and hardware per plans and specifications installation by others.

BID PACKAGE 7B: ENTRANCES & STOREFRONTS

Project: **Highland West Junior High Classroom Addition**

Location: **901 N. Santa Fe, Moore, OK 73160**

Specification Section	Description	
Division 0	Bidding & Contract Documents	Complete
Division 1	General Requirements	Complete
Section 08400	Entrances & Storefronts	Complete
Section 08800	Glazing	As applicable to this bid package

This bid package shall include all labor, materials, equipment, services, insurances, and incidentals for the DOORS/HARDWARE BID PACKAGE, including work from referenced specifications and other work normally associated with this trade.

The scope of work shall include all General Bid Package Items as listed in section 400 of Division 0 of the bid manual and shall also include, but not be limited to the following items:

1. Furnish all labor, materials, and hardware per plans and specifications to complete this scope of work.

BID PACKAGE 8: FINISHES (CEILING SYSTEM)

Project: **Highland West Junior High Classroom Addition**

Location: **901 N. Santa Fe, Moore, OK 73160**

Specification Section	Description	
Division 0	Bidding & Contract Documents	Complete
Division 1	General Requirements	Complete
Section 05400	Cold Formed Metal Framing	Complete
Section 06100	Rough Carpentry	As applicable to this bid package
Section 06200	Finish Carpentry	As applicable to this bid package
Section 06300	Wood Treatment	As applicable to this bid package
Section 07200	Insulation	As applicable to this bid package
Section 09120	Ceiling Suspension Systems	Complete
Section 09250	Gypsum Wallboard	Complete
Section 09500	Acoustical Treatment	Complete

This bid package shall include all labor, materials, equipment, services, insurances, and incidentals for the FINISHES (CEILING SYSTEM) BID PACKAGE, including work from referenced specifications and other work normally associated with this trade.

The scope of work shall include all General Bid Package Items as listed in section 400 of Division 0 of the bid manual and shall also include, but not be limited to the following items:

1. Furnish labor, materials, and equipment necessary to complete the ceiling system/finish framing/sheetrock.

2. All miscellaneous equipment and material required for the proper completion of this scope of work.

3. Demo as per sheet C200 on existing building.

4. Subcontractor is to ensure that all elevated work is made ready to protect all areas below and have OSHA approved fall protection for work to proceed.

BID PACKAGE 9: SPECIALTIES (ACCESSORIES)

Project: **Highland West Junior High Classroom Addition**

Location: **901 N. Santa Fe, Moore, OK 73160**

Specification Section	Description	
Division 0	Bidding & Contract Documents	Complete
Division 1	General Requirements	Complete
Section 10100	Chalkboards and Tackboards	Complete
Section 10520	Fire Protection Specialties	Complete
Section 10800	Toilet and Bath Accessories	Complete

This bid package shall include all labor, materials, equipment, services, insurances, and incidentals for the SPECIALTIES (ACCESSORIES) BID PACKAGE, including work from referenced specifications and other work normally associated with this trade.

The scope of work shall include all General Bid Package Items as listed in section 400 of Division 0 of the bid manual and shall also include, but not be limited to the following items:

1. Furnish all materials necessary for installation of accessories per the plans and specifications, installation to be provided by others.

BID PACKAGE 10: FLOORING

Project: **Highland West Junior High Classroom Addition**

Location: **901 N. Santa Fe, Moore, OK 73160**

Specification Section	Description	
Division 0	Bidding & Contract Documents	Complete
Division 1	General Requirements	Complete
Section 09300	Tile	Complete
Section 09650	Resilient Tile Flooring	Complete
Section 09681	Carpet Tile	Complete

This bid package shall include all labor, materials, equipment, services, insurances, and incidentals for the FLOORING BID PACKAGE, including work from referenced specifications and other work normally associated with this trade.

The scope of work shall include all General Bid Package Items as listed in section 400 of Division 0 of the bid manual and shall also include, but not be limited to the following items:

1. Furnish labor, materials, and equipment necessary to complete flooring.

2. All miscellaneous equipment and material required for the proper completion of this scope of work.

BID PACKAGE 11: PAINTING

Project: **Highland West Junior High Classroom Addition**

Location: **901 N. Santa Fe, Moore, OK 73160**

Specification Section	Description	
Division 0	Bidding & Contract Documents	Complete
Division 1	General Requirements	Complete
Section 09900	Painting	Complete

This bid package shall include all labor, materials, equipment, services, insurances, and incidentals for the PAINTING BID PACKAGE, including work from referenced specifications and other work normally associated with this trade.

The scope of work shall include all General Bid Package Items as listed in section 400 of Division 0 of the bid manual and shall also include, but not be limited to the following items:

1. Furnish labor, materials, and equipment necessary to complete painting.

2. Provide all miscellaneous equipment and material required for the proper completion of this scope of work.

3. Subcontractor is to ensure that all elevated work is made ready to protect all areas below and have OSHA approved fall protection for work to proceed.

BID PACKAGE 12: FIRE SUPRESSION

Project: **Highland West Junior High Classroom Addition**

Location: **901 N. Santa Fe, Moore, OK 73160**

Specification Section	Description	
Division 0	Bidding & Contract Documents	Complete
Division 1	General Requirements	Complete
Section 210500	Common Work Results for Fire Suppression	Complete
Section 210553	Identification for Fire Suppression Piping and Equipment	Complete
Section 211300	Fire Suppression Sprinklers	Complete

This bid package shall include all labor, materials, equipment, services, insurances, and incidentals for the FIRE SUPPRESION BID PACKAGE, including work from referenced specifications and other work normally associated with this trade.

The scope of work shall include all General Bid Package Items as listed in section 400 of Division 0 of the bid manual and shall also include, but not be limited to the following items:

1. Furnish labor, materials and equipment necessary to complete fire suppression.

2. All miscellaneous equipment and material required for the proper completion of this scope of work.

3. Subcontractor is to ensure that all elevated work is made ready to protect all areas below and have OSHA approved fall protection for work to proceed.

BID PACKAGE 13: MECHANICAL

Project: **Highland West Junior High Classroom Addition**

Location: **901 N. Santa Fe, Moore, OK 73160**

Specification Section	Description	
Division 0	Bidding & Contract Documents	Complete
Division 1	General Requirements	Complete
Section 230500	Common Work Results for HVAC	Complete
Section 230513	Common Motor Requirements for HVAC Equipment	Complete
Section 230548	Vibration and Seismic Controls for HVAC Piping and Equipment	Complete
Section 230593	Testing, Adjusting, & Balancing for HVAC	Complete
Section 230700	HVAC Insulation	Complete
Section 233100	HVAC Ducts and Casings	Complete
Section 233300	Air Duct Accessories	Complete
Section 233400	HVAC Fans	Complete
Section 233713	Diffusers, Registers, and Grilles	Complete
Section 235400	Gas Fired Furnaces	Complete
Section 236213	Packaged Air-Cooled Refrigerant Compressor and Condensing Units	Complete

This bid package shall include all labor, materials, equipment, services, insurances, and incidentals for the MECHANICAL BID PACKAGE, including work from referenced specifications and other work normally associated with this trade.

The scope of work shall include all General Bid Package Items as listed in section 400 of Division 0 of the bid manual and shall also include, but not be limited to the following items:

1. Furnish labor, materials and equipment necessary to complete mechanical.
2. Testing to be coordinated by mechanical contractor.
3. All miscellaneous equipment and material required for the proper completion of this scope of work.
4. Coring, patching and caulking of penetrations required for this scope of work.
5. Subcontractor is to ensure that all elevated work is made ready to protect all areas below and have OSHA approved fall protection for work to proceed.

BID PACKAGE 14: PLUMBING

Project: **Highland West Junior High Classroom Addition**

Location: **901 N. Santa Fe, Moore, OK 73160**

Specification Section	Description	
Division 0	Bidding & Contract Documents	Complete
Division 1	General Requirements	Complete
Section 220500	Common Work Results for Plumbing	Complete
Section 220516	Exp. Fittings & Loops for Plumbing Piping	Complete
Section 220519	Meters and Gages for Plumbing Piping	Complete
Section 220548	Vib. Controls for Plumbing Piping and Equipment	Complete
Section 220553	Identification for Plumbing Piping & Equipment	Complete
Section 220719	Plumbing Piping Insulation	Complete
Section 221005	Plumbing Piping	Complete
Section 221006	Plumbing Piping Specialties	Complete
Section 223000	Plumbing Equipment	Complete
Section 224000	Plumbing Fixtures	Complete

This bid package shall include all labor, materials, equipment, services, insurances, and incidentals for the PLUMBING BID PACKAGE, including work from referenced specifications and other work normally associated with this trade.

The scope of work shall include all General Bid Package Items as listed in section 400 of Division 0 of the bid manual and shall also include, but not be limited to the follow items:

1. Provide all material labor, and equipment required for proper installation of complete plumbing system.

2. All piping, fittings, valves, cleanouts, fixtures, and accessories as required for complete and proper installation of plumbing.

3. Any sleeves and penetrations required in walls, floors, roof, etc. for this work including fire/smoke sealing inside and outside of sleeves and patching/fire caulking of the penetrations.

4. All supports, hangers and in-wall blocking required for this work.

5. All identification as called for and/or required per code.

6. Coring, patching and caulking of penetrations required for this scope of work.

7. Caulking of all fixtures.

8. Furnishing and installing all plumbing equipment.

9. Provide all necessary sleeving and or block-outs at CMU required for the proper installation of all plumbing systems included in this contract agreement. Contractor will provide adequate layout and coordination with the Masonry Contractor to ensure proper installation of the work.

10. All permits, fees and inspections as required.

11. All cutting and patching as required for the work of this proposal.

12. Subcontractor is responsible for backfilling and compactions per section 00202.

13. All testing to be paid for by others and coordinated by subcontractor associated with backfilling and compaction.

14. Subcontractor is responsible for removal of excess spoils from site.

15. Subcontractor to coordinate with utilities subcontractor to tie into utilities.

16. Subcontractor shall furnish and install steel, lockable, and primed access panels in any location required to allow for proper access to the plumbing system. Access panels shall be large enough to accommodate easy access for repairs, maintenance, and inspection.

17. All penetrations through CMU walls must have block-outs. Core drilling will not be allowed.

18. Subcontractor to review sheet C200 as applicable to plumbing.

BID PACKAGE 15: ELECTRICAL/CABLING/IT

Project: **Highland West Junior High Classroom Addition**

Location: **901 N. Santa Fe, Moore, OK 73160**

Specification Section	Description	
Division 0	Bidding & Contract Documents	Complete
Division 1	General Requirements	Complete
Section 260500	Common Work Results for Electrical	Complete
Section 260504	Cleaning, Inspection, and Testing of Electrical Equipment	Complete
Section 260519	Low-Voltage Electrical Power Conductors & Cables	Complete
Section 260523	Control-Voltage Electrical Power Cables	Complete
Section 260526	Grounding and Bonding for Electrical Systems	Complete
Section 260529	Hangers and Supports for Electrical Systems	Complete
Section 260533	Raceway and Boxes for Electrical Systems	Complete
Section 260553	Identification for Electrical Systems	Complete
Section 260573	Short Circuit Coordination & Arc Flash Hazard Study	Complete
Section 262200	Low-Voltage Transformers	Complete
Section 262416	Panelboards	Complete
Section 262702	Equipment Wiring Systems	Complete
Section 262726	Wiring Devices	Complete
Section 262728	Disconnect Switches	Complete
Section 265113	Interior Lighting Fixtures, Lamps, and Ballasts	Complete
Plan Sheet T000-T504	Structured Cabling	Complete
Plan Sheet T000-T504	Intercom System	Complete
Plan Sheet T000-T504	Clock System	Complete
Plan Sheet T000-T504	Security System	Complete
Plan Sheet T000-T504	Access Control Equipment	Complete
Plan Sheet T000-T504	IP Camera	Complete
Plan Sheet T000-T504	Fire System	Complete

This bid package shall include all labor, material, equipment, services, insurances, and incidentals for the ELECRICAL/CABLING/IT BID PACKAGE, including work from referenced specifications and other work normally associated with this trade.

The scope of work shall include all General Bid Package Items as listed in section 400 of Division 0 of the Bid Manual and shall also include, but not be limited to the following items:

1. Furnish and install the complete building and site electrical systems as specified.

2. Furnish, install, and coordinate all permanent fire alarm and communication systems.

3. Provide, coordinate, and maintain all temporary building/jobsite trailer and site electrical power and lighting services, including temporary construction facilities.

4. Subcontractor is responsible for coordinating all systems with the Fire Sprinkler, Mechanical, and Plumbing Contractors.

5. All associated inspections, permits, and required fees.

6. Subcontractor is responsible for all layout associated with this bid package.

7. Subcontractor is responsible for bid package 14 associated earthwork, including hauling off excess spoils.

8. Furnish and install all sleeves for associated electrical work.

9. Subcontractor is responsible for any and all wiring to others equipment.

10. Subcontractor is responsible for all fire-stopping where this scope of work creates penetrations.

11. Furnish and install all conduit and boxes for specification divisions 26000 through 28000.

12. Furnish and install all conduit and boxes for all mechanical controls systems.

13. Subcontractor shall furnish and install steel, lockable, and primed access panels in any location required to allow for proper access to the electrical system. Access panels shall be large enough to accommodate easy access for repairs, maintenance, and inspection.

14. Demo as per sheet C200.

15. All penetrations through CMU walls must have block-outs. Core drilling will not be allowed.

BID PACKAGE 16: METALS (ERECTION ONLY)

Project: **Moore West Junior High School Classroom Addition**
Location: **9400 S Pennsylvania Ave, Oklahoma City, OK 73159**

Specification Section	**Description**	
Division 0	Bidding & Contract Documents	Complete
Division 1	General Requirements	Complete
Section 05120	Structural Steel	as Applicable to Erection
Section 05210	Steel Joists	as Applicable to Erection
Section 05310	Metal Deck	as Applicable to Erection
Section 05500	Metal Fabrications	as Applicable to Erection

This bid package shall include all, equipment, services, insurances, and incidentals for the METAL (ERECTION ONLY) BID PACKAGE, including work from referenced specifications and other work normally associated with this trade.

The scope of work shall include all General Bid Package Items as listed in section 400 of Division 0 of the bid manual and shall also include, but not be limited to the following items:

1. Supply all labor, tools, and equipment needed to erect the structural steel framing, joist, and steel decking.

2. Work with job superintendent and (metal) material provider regarding the delivery of materials.

END

MOORE PUBLIC SCHOOLS
HIGHLAND WEST JUNIOR HIGH SCHOOL
CLASSROOM ADDITION

INDEPENDENT DISTRICT NO. 2
CLEVELAND COUNTY, MOORE, OKLAHOMA

901 NORTH SANTA FE
MOORE, OKLAHOMA 73160

PROJECT MANUAL

JULY 2023

AGP | the Abla Griffin Partnership

PROJECT MANUAL

JULY 2023

MOORE PUBLIC SCHOOLS
HIGHLAND WEST JUNIOR HIGH SCHOOL
CLASSROOM ADDITION

INDEPENDENT DISTRICT NO. 2
CLEVELAND COUNTY, MOORE, OKLAHOMA

901 NORTH SANTA FE
MOORE, OKLAHOMA 73160

ARCHITECT:

AGP | the Abla Griffin Partnership

the Abla Griffin Partnership LLC
201 North Broadway, Suite 210
Moore, Oklahoma 73160
t: 405.735.3477
AGP@theAGP.net

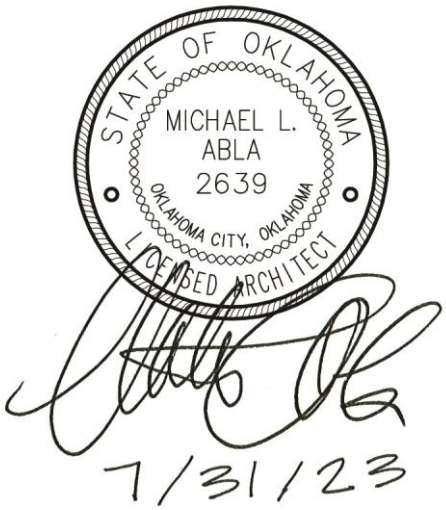

TABLE OF CONTENT

Title Page	1 page
Table of Contents	3 pages
Structural Engineering Table of Contents	1 page
Mechanical, Electrical, Plumbing, & Technology Table of Contents	2 pages
Civil Specification Table of Contents	1 page

BIDDING REQUIREMENTS

Special Conditions	7 pages
Geotechnical Engineering Report prepared by Intertek – Professional Service Industries, Inc.	41 pages

DIVISION 1 - GENERAL REQUIREMENTS

01010 Summary of the Work	01010-1 – 4
Job Sign Drawing	1 page

DIVISION 2 - SITE WORK

MWJH Stormwater Pollution Prevention Plan	59 pages
02110 Temporary Construction Fencing	02110-1 - 2

DIVISION 3 - CONCRETE

03300 Cast-In-Place Concrete	03300-1 - 13

DIVISION 4 - MASONRY

04810 Unit Masonry Assemblies	04810-1 – 11
04812 Thin Brick Veneer	04812-1 - 8

DIVISION 5 - METALS

05120 Structural Steel	05120-1 - 6
05210 Steel Joists	05210-1 - 4
05310 Metal Deck	05310-1 - 3
05400 Cold Formed Metal Framing	05400-1 - 10
05500 Metal Fabrications	05500-1 - 4

DIVISION 6 - WOOD & PLASTIC

06100 Rough Carpentry	06100-1 - 4
06200 Finish Carpentry	06200-1 - 2
06300 Wood Treatment	06300-1
06410 Custom Casework	06410-1 – 7
06420 Custom Laminate Casework (Contractor Option)	06420-1 - 11

TABLE OF CONTENT

DIVISION 7 - THERMAL & MOISTURE PROTECTION

07100	Waterproofing	07100-1 - 2
07150	Dampproofing	07150-1 - 2
07200	Insulation	07200-1 - 2
07260	Vapor Barrier	07260-1 - 3
07415	Prefinished Metal Soffit Panels	07415-1 – 2
07424	Composite Wall Panels	07424-1 - 9
07550	Modified Bitumen Membrane Roofing System	07550-1 - 14
07600	Flashing and Sheet Metal	07600-1 - 3
07840	Firestopping	07840-1 - 9
07900	Sealants	07900-1 - 6

DIVISION 8 - DOORS & WINDOWS

08100	Metal Doors and Frames	08100-1 - 9
08200	Wood Doors	08200-1 – 5
08400	Entrances and Storefronts	08400-1 - 6
08700	Finish Hardware	08700-1 - 8
08800	Glazing	08800-1 - 3

DIVISION 9 - FINISHES

09120	Ceiling Suspension Systems	09120-1 - 3
09250	Gypsum Wallboard	09250-1 – 2
09300	Tile	09300-1 - 11
09500	Acoustical Treatment	09500-1 - 2
09650	Resilient Flooring	09650-1 - 3
09681	Carpet Tile	09681-1 - 7
09900	Painting	09900-1 - 4

DIVISION 10 - SPECIALTIES

10100	Chalkboards and Tackboards	10100-1 – 2
10400	Interior Signage	10400-1 – 4
10420	Letters and Plaques	10420-1 - 3
10520	Fire Protection Specialties	10520-1 - 2
10800	Toilet and Bath Accessories	10800-1 - 2

DIVISION 11 - EQUIPMENT

Not Used

DIVISION 12 - FURNISHINGS

Not Used

DIVISION 13 - SPECIAL CONSTRUCTION

Not Used

DIVISION 14 - CONVEYING SYSTEMS

Not Used

DIVISION 21 THRU 28 - MECHANICAL AND ELECTRICAL

REFER TO MECHANICAL AND ELECTRICAL TABLE OF CONTENTS

DIVISIONS 01, 02, AND 31 THRU 33 – CIVIL

REFER TO CIVIL TABLE OF CONTENTS

STRUCTURAL SPECIFICATION TABLE OF CONTENTS

Section Section Title .....pages

DIVISION 3 – CONCRETE
03300 Cast-In-Place Concrete (KFC) 1-13

DIVISION 5 – METALS
05120 Structural Steel Framing (KFC) 1-6
05210 Steel Joist Framing (KFC) 1-4
05310 Steel Decking (KFC) 1-3
05500 Metal Fabrications (KFC) 1-4

DIVISION 7 – THERMAL AND MOISTURE PROTECTION
07260 Vapor Barrier (KFC) 1-3

END

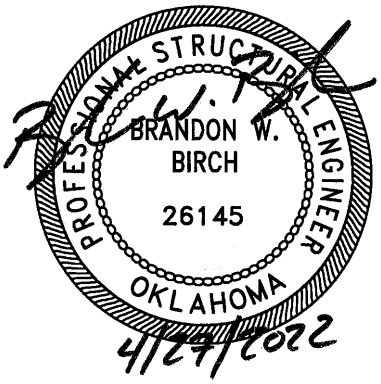

KFC engineering
Kirkpatrick Forest Curtis PC
Structural Engineering
OK CA #3888, EXP. 06/30/23
525 Central Park Drive, Suite 202
Oklahoma City, OK 73105
Telephone: 405.528.4596
Fax: 405.528.4580

SECTION 000110

TABLE OF CONTENTS

Engineer of Record
Divisions 21, 22, 23
Dwayne McDonald Gordon
Mechanical Engineer
Salas O'Brien, LLC
OK 30822 / EXP 02.28.2024
CA 7058/ EXP 06.30.2023

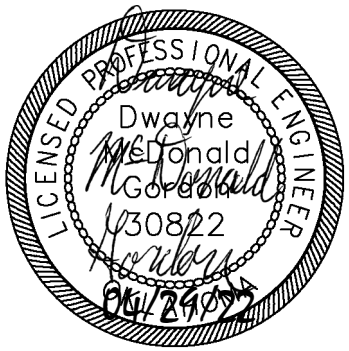

DIVISION 21 - FIRE SUPPRESSION

210500	Common Work Results for Fire Suppression
210553	Identification for Fire Suppression Piping and Equipment
211300	Fire Suppression Sprinklers

DIVISION 22 - PLUMBING

220500	Common Work Results for Plumbing
220516	Expansion Fittings and Loops for Plumbing Piping
220519	Meters and Gages for Plumbing Piping
220548	Vibration Controls for Plumbing Piping and Equipment
220553	Identification for Plumbing Piping and Equipment
220719	Plumbing Piping Insulation
221005	Plumbing Piping
221006	Plumbing Piping Specialties
223000	Plumbing Equipment
224000	Plumbing Fixtures

DIVISION 23 - HEATING, VENTILATING, AND AIR CONDITIONING (HVAC)

230500	Common Work Results for HVAC
230513	Common Motor Requirements for HVAC Equipment
230548	Vibration and Seismic Controls for HVAC Piping and Equipment
230593	Testing, Adjusting, and Balancing for HVAC
230700	HVAC Insulation
233100	HVAC Ducts and Casings
233300	Air Duct Accessories
233400	HVAC Fans
233713	Diffusers, Registers and Grilles
235400	Gas Fired Furnaces
236213	Packaged Air-Cooled Refrigerant Compressor and Condensing Units

Engineer of Record
Divisions 26, 28
Timothy Van Ostran
Electrical Engineer
Salas O'Brien, LLC
OK 32650 / EXP 03.31.2023
CA 7058 / EXP 06.30.2023

DIVISION 26 - ELECTRICAL

260500	Common Work Results for Electrical
260504	Cleaning, Inspection and Testing Electrical Equipment
260519	Low-Voltage Electrical Power Conductors and Cables
260523	Control-Voltage Electrical Power Cables
260526	Grounding and Bonding for Electrical Systems
260529	Hangers and Supports for Electrical Systems
260533	Raceway and Boxes for Electrical Systems
260553	Identification for Electrical Systems
260573	Short Circuit Coordination Study and Arc Flash Hazard Study
262200	Low-Voltage Transformers
262416	Panelboards
262702	Equipment Wiring Systems
262726	Wiring Devices
262728	Disconnect Switches
265113	Interior Lighting Fixtures, Lamps, and Ballasts

END OF SECTION

TABLE OF CONTENTS

CIVIL

Civil Construction Specifications

015713	Erosion and Sedimentation Control (Including SWPPP)
017123	Field Engineering
024116	Demolition
311000	Site Clearing
312000	Earth Moving
313116	Termite Control
321216	Asphalt Paving
321236.13	Asphalt Seal and Fog Coat
321313	Concrete Paving Curb and Sidewalk
321373	Concrete Paving Joint Sealants
329200	Turf and Grasses
331000	Water Utilities
333000	Sanitary Sewage Utilities
334100	Storm Utility Drainage Piping

ATTACHMENTS

Construction Drawings – Highland West Jr. High
CCC Project No. 23069, dated July 31st, 2032
SWPPP, prepared by Cedar Creek Inc
Project No. 23069, dated 08.09.23
Geotech Report by PSI, dated 07.22.20

Local and/or State jurisdictional requirements and specifications shall govern if requirements are stricter and different than as stated in these specifications.

PROJECT: 23069 – Highland West Jr. High

PROJECT ENGINEER: Andrew Wilson, P.E.

(Engineer's Seal & Signature)

SPECIAL CONDITIONS

TIME FOR COMPLETION AND LIQUIDATED DAMAGES:

A. Upon execution of the contract agreement between the Owner and the Contractor, it shall become an obligation of the contractor to complete all work to be performed under this agreement for the Construction of the new Highland West Junior High School STEM Classroom Addition to be located at 901 North Santa Fe, Moore, OK - **within 270 Calendar Days.**

B. Penalty for noncompliance by the above date shall be cessation of all further periodical payments until the work is completed and can be fully used for the purpose intended.

PAYMENTS:

A. The Owner's payment schedule indicating the payment dates established by Moore Public Schools shall be provided to the contractor to establish a monthly payment schedule.

B. **Certificates of payment shall be submitted to the Architect on or before 7 days prior to Owner's cut-off date.**

C. Until the Work is 50 percent complete, the Owner will pay 95 percent of the amount due the Contractor on account of progress payments. At the time the Work is 50 percent complete, any **remaining** partial payments shall be paid at 97.5 percent of amount due. The retainage shall be retained until the project is completed.

INSURANCE AND BONDS:

A. Insurance provided shall be with a company or companies licensed to do business in the state of Oklahoma.

B. Policies shall be provided in the following types and amounts:

1. a. Workmen's Compensation-Statutory
   b. Employer's Liability-$500,000 each accident.

2. Comprehensive General Liability:
   a. Bodily Injury - $1,000,000 each occurrence.
   b. Personal Injury - $1,000,000
   c. Property Damage - $1,000,000 each occurrence

3. Automobile Liability:
   a. Bodily Injury - $500,000 each person/$1,000.000 each occurrence

b. Such Comprehensive Automobile Liability Insurance shall include all owned and non-owned hired motor vehicles.

4. Owner's Protective Liability - Same limits as above.

5. Products and Completed Operations - Same limits as above.

6. Contractual Liability - Same limits as above.

C. Furnish one copy of Certificates herein required for each copy of the Agreement; specifically set forth evidence of all coverage required by Subparagraphs 11.1 and 11.2. Furnish to the Owner copies of any endorsements that are subsequently issued amending coverage or limits.

D. T**he Contractor shall provide property insurance in the amount of the initial contract sum as well as subsequent modifications thereto for the entire Work at the site on a replacement cost basis without voluntary deductibles. This insurance coverage shall be the "all-risk" form for completed value.**

TEMPORARY SERVICES:

A. Sanitary Facilities: The Contractor shall provide and maintain necessary sanitary conveniences for the use of those employed on/or about the work. The sanitary facilities shall be properly secluded from public observation and shall be such locations as shall be approved by the Owner, and their use shall be strictly enforced.

SHOP DRAWINGS and SUBMITTALS:

A. Unless otherwise specified, the shop drawings and product data shall be submitted **electronically**. Physical samples of materials shall be submitted to the Architect as required.

B. Construction Manager is responsible for obtaining and distributing required prints of shop drawings to his subcontractors and material suppliers after as well as before final approval.

C. Shop drawings and samples shall be dated and marked to show the names of the Project, Architect, CM, originating Sub-Contractor, manufacturer or supplier, and separate detailer if pertinent.

Shop drawings shall completely identify Specifications section and locations at which materials or equipment are to be installed. Reproduction of Contract Drawings are acceptable as Shop Drawings only when specifically authorized in writing by the Architect.

D. If materials or specified items other than those specified in these Contract Documents are supplied - and approved by the Architect - it shall be the Construction Manager's responsibility to provide ALL additional materials, accessories, substrates, utility connection, etc. for a complete and operational installation at NO additional cost to the Owner.

CHANGES IN THE WORK:

A. Cost shall be limited to the following: cost of materials, including sales tax and cost of delivery; cost of labor, including social security, old age and unemployment insurance, and fringe benefits under collective bargaining agreements; workmen's compensation insurance; bond premiums; and rental value of power tools and equipment. Overhead shall include the following; supervision, superintendence, wages of time keepers, watchmen and clerks, hand tools, incidentals, general office expense, and all other expenses not included in "cost".

B. Change Order markups shall be limited to 10% overhead and 10% profit. No other markups shall be allowed.

AS BUILT DRAWINGS:

A. Provide and maintain in proper order and in good, clean condition in the field office at the project site, one complete full-size set of all working drawings. On this set of drawing prints, in red ink, neatly and accurately inscribe any and all changes in the work.

B. Upon completion of work, the Contractor shall furnish one set of **"as built"** drawings. These drawings shall be contract drawings corrected in **red ink** to show any differences between contract drawings and actual construction. All changes made during construction shall be noted. Each drawing showing changes in dimensions, details, or containing supplemental information shall be plainly marked **"As Built"** and shall contain the signature of both the Architect and the Contractor.

CLOSEOUT SUBMITTALS:

Prepare project data in the form of an instructional manual supplied electronically on media as requested by Owner (CD or flash drive). The following information shall be included and arranged under a Table of Contents:

1. Directory listing names, addresses, and telephone numbers of the Architect/Engineer(s), General Contractor, Subcontractors, and major material/equipment suppliers.
2. Operation and Maintenance Instructions arranged by system and subdivided by specification section. For each category, identify names, addresses, and telephone numbers of Subcontractors and Suppliers. Include equipment, parts list for each, operating instructions, maintenance instructions for equipment, special finishes, etc.
3. Project documents and certificates, including shop drawings and product data, air and water balance reports, photocopies of warranties.
4. Record As-Built Drawings as described above.
5. Completed Non-Asbestos Affidavit.

DEBRIS DISPOSAL:

Waste disposal shall be the responsibility of the Contractor. The Contractor shall make arrangements with the local authorities having jurisdiction for accommodation of all waste disposal. If local facilities are not available, the contractor shall be responsible for all other arrangements for waste disposal.

SUPPLEMENTARY CONDITIONS AND SPECIAL CONDITIONS:

In the following sections where the term "General Conditions" is used, it shall include the "Supplementary Conditions" and/or "Special Conditions" bound in this project manual.

MISCELLANEOUS PROVISIONS:

A. TESTS AND INSPECTIONS

Add the following clarification: **Regardless of how it is described elsewhere in the drawings and specifications, the CM shall engage all testing laboratories / subcontractors as approved by the Architect; and, pay for ALL testing as required by the drawings and specifications.** The CM shall pay for any additional testing due to defective work. The Owner shall pay for any additional testing requested and found to be non-

defective.

B. EQUAL OPPORTUNITY

The Contractor shall maintain policies of employment as follows:

The Construction Manager and all Subcontractors shall not discriminate against any employee or applicant for employment because of race, religion, color, sex, or national origin. The Contractor shall take affirmative action to insure that applicants are employed, and that employees are treated fairly during employment without regard to their race, religion, color, sex, or national origin. Such action shall include, but not be limited to the following: employment, upgrading, demotion, or transfer; recruitment advertising; layoff or termination; rates of pay or any other forms of compensation; and selection for training, including apprenticeship. The CM agrees to post in conspicuous places, available to employees and applicants for employment, notices setting forth the policies of non-discrimination.

C. COOPERATION WITH BUILDING OFFICIALS

Cooperate with applicable Federal, State, City or other governmental officials and inspectors at all times. If such officials or inspectors deem special inspections are necessary, provide assistance and facilities that will expedite their inspection.

Construction Manager shall be responsible for obtaining and paying for ALL building permits required for this project. This cost shall be included in the Construction Manager's General Conditions.

D. MEASUREMENTS

Before doing any work or ordering any materials, the Contractor shall verify all measurements of existing and new work and shall be responsible for their correctness.

Any differences which may be found shall be submitted to the Architect for consideration before proceeding with the work. No extra compensation will be allowed because of differences between actual dimensions and measurements indicated on the working drawings.

E. MANUFACTURER'S SPECIFICATIONS AND INSTRUCTIONS

Install all manufactured items of materials or equipment in strict accordance with manufacturer's recommended specifications, except that the specifications herein, where more stringent, shall be complied with.

At the completion of the project and prior to final acceptance by the Owner, provide the Owner with three complete sets of operating and maintenance instructions, and demonstrate to him the procedures for proper operation and maintenance of all equipment.

F. JOB MAINTENANCE

During the course of their work, all crafts and trades shall protect all work which preceded theirs from damage, and they shall make repairs or replacements to any damage caused either directly or indirectly by them.

G. COMPLIANCE WITH STATE AND FEDERAL LAWS

Construction Manager assumes full responsibility for the payment of all contributions and payroll taxes (state and federal) as to all subcontractors and employees engaged in the performance of work pursuant hereto and further agrees to check and meet all requirements that might be specified under regulations of the administrative officials or board charged with the enforcement of any state or federal act on the subject referred. CM agrees to furnish Owner, upon request, a certificate or other evidence of compliance therewith.

H. OCCUPATIONAL SAFETY AND HEALTH ACT OF 1970 (OSHA)

The Construction Manager shall comply with the latest edition and revision of The Federal Occupational Safety and Health Act of 1970 for construction.

I. GUARANTY BONDS

1. Prior to the Owner signing the contract agreement, he will require the Construction Manager to furnish performance and payment bonds covering the faithful performance of the entire construction contract agreement. The performance bond and the payment bond shall each be made out in one hundred percent (100%)

of the contract sum and shall be in a company or companies against which the Owner has no reasonable objection.

2. Bonds shall be signed by an official of the bonding company and shall be accompanied by the bonding agent's written power-of-attorney in order that one copy may be attached to each copy of the contract agreement.

3. The Construction Manager shall include in his proposal amount the total premiums for all required bonds.

4. The Contractor does hereby warrant and/or guarantee against defects in all workmanship and materials performed or furnished by him directly or by his subcontractors for a period of one (1) year from the date of completion, as evidenced by the date of the Final Certificate or final acceptance of the project. Said warranty and/or guarantee shall be in the form of a good and sufficient bond in a sum equal to one hundred percent (100%) of the contract price.

End of Special Conditions

Project Number: 05462142-4
July 22, 2020

Professional Service Industries, Inc.
11825 S. Portland Avenue
Oklahoma City, OK 73170
Phone: (405) 735-6052
Fax: (405)735-6086

Mr. Michael L. Abla, AIA
AGP – The Abla Griffin Partnership, LLC
201 North Broadway, Suite 210
Moore, OK 73160

Re: **Report of Geotechnical Engineering Services**
Proposed Moore Public Schools Pre-Planning Services
Highland West Junior High School
New Classroom Addition
NWQ NW 7th Place and N Santa Fe Avenue
Moore, Oklahoma

Dear Mr. Abla:

Thank you for choosing Professional Service Industries, Inc. (PSI), an Intertek company. The information you requested is attached.

PSI performed the geotechnical exploration that you requested on February 25, 2020. PSI transmits the geotechnical report with this letter.

We thank you for your business and we look forward to finding ways to grow our partnership, expand our services, and continue Building Better Together.

For Professional Service Industries, Inc.
CA NO. 1111 Expires 06/30/21

Yicheng Zhang, EI
Project Manager
Geotechnical Services

REGISTERED PROFESSIONAL ENGINEER
ADEDAMOLA IBIKUNLE OLUWAKEMI OYESANYA
18006
OKLAHOMA

Adedamola I.O. Oyesanya, P.E.
Senior Geotechnical Engineer
Geotechnical Services

7/22/2020

Report of Geotechnical Engineering Services

Proposed Moore Public Schools Pre-Planning Services
Highland West Junior High School
New Classroom Addition
NWQ NW 7th Place and N Santa Fe Avenue
Moore, Oklahoma

Prepared for

AGP – The Abla Griffin Partnership, LLC
201 North Broadway, Suite 210
Moore, OK 73160

Prepared by

Professional Service Industries, Inc.
11825 S. Portland Avenue
Oklahoma City, OK 73170

July 22, 2020

PSI Project 05462142-4

Yicheng Zhang, EI
Project Manager
Geotechnical Services

Adedamola I.O. Oyesanya, P.E.
Senior Geotechnical Engineer
Geotechnical Services

7/22/2020

TABLE OF CONTENTS

1 PROJECT INFORMATION 1
1.1 PROJECT AUTHORIZATION 1
1.2 PROJECT DESCRIPTION 1
1.3 PURPOSE AND SCOPE OF SERVICES 1
2 SITE AND SUBSURFACE CONDITIONS 3
2.1 SITE LOCATION AND DESCRIPTION 3
2.2 SUBSURFACE CONDITIONS 3
2.3 GROUNDWATER INFORMATION 4
3 EVALUATION AND RECOMMENDATIONS 5
3.1 GEOTECHNICAL DISCUSSION 5
3.1.1 SWELL POTENTIAL CLAYS 5
3.1.2 BUILDING ADDITION CONSIDERATIONS 6
3.2 GEOLOGIC UNIT 6
3.3 SEISMIC INFORMATION 6
3.4 SITE PREPARATION 7
3.5 SHALLOW FOUNDATION RECOMMENDATIONS 9
3.5.1 CONVENTIONAL SPREAD FOOTING RECOMMENDATIONS 9
3.5.2 MONOLITHIC SLAB-ON-GRADE FOUNDATION RECOMMENDATIONS 10
3.6 DRILLED PIER FOUNDATION RECOMMENDATIONS 11
3.6.1 LATERAL RESISTANCE DESIGN PARAMETERS 12
3.7 FLOOR SLAB RECOMMENDATIONS 13
3.7.1 STRUCTURAL SLAB 14
3.8 LATERAL EARTH PRESSURE RECOMMENDATIONS 14
3.9 CORROSIVITY OF SOIL 16
4 PAVEMENT RECOMMENDATIONS 18
4.1 SUBGRADE SOIL PREPARATION 18
4.2 PAVEMENT DESIGN 18
4.2.1 CEMENT, LIME, OR FLY ASH STABILIZATION FOR PAVEMENT 19
5 CONSTRUCTION CONSIDERATIONS 20
5.1 EXCAVATIONS 20
6 REPORT LIMITATIONS 21

FIGURES

FIGURE 1 – SITE VICINITY
FIGURE 2 – BORING LAYOUT PLAN

LIST OF APPENDICES

APPENDIX A – BORING LOGS
APPENDIX B – LABORATORY TEST REPORTS
APPENDIX C – GENERAL NOTES

1 PROJECT INFORMATION

1.1 PROJECT AUTHORIZATION

Professional Service Industries, Inc. (PSI), an Intertek company, has completed a geotechnical exploration for the proposed Moore Public Schools Pre-Planning Project's New Classroom Addition at the Highland West Junior High School in Moore, Oklahoma. PSI's services were authorized by Mr. Michael Abla, Principal, Abla Griffin Partnership, by signing PSI's proposal on February 25, 2020. This exploration was accomplished in general accordance with PSI Proposal No. P0546-303281 dated February 18, 2020.

1.2 PROJECT DESCRIPTION

Project information was provided by Mr. Clay Griffin, Principal, AGP. The proposed construction will consist of classroom additions to the south areas of the existing Highland West Junior High buildings in Moore, Oklahoma. The proposed construction will also include a new roadway from Santa Fe Avenue to the west side of the building. The existing school buildings in the areas of the proposed addition are essentially single-story. Detail information about the construction type is not available to PSI; however, PSI anticipates the construction will be typical and not unusual for the type of project and use proposed. Available information includes the following:

Loading:

- Maximum column loads on the order of 10 to 200 kips.
- Maximum wall loads on the order of 4 kips per linear feet (estimated by PSI)
- Floor slab load not exceeding 250 pounds per square feet.

The report is also based on the following:

Grading:

- Cut and fill on the order of 0 to 2 feet to achieve design grade.

1.3 PURPOSE AND SCOPE OF SERVICES

The purpose of this study was to explore the subsurface conditions at the site and prepare recommendations for geotechnical design considerations for the proposed building addition. PSI's scope of services included drilling a total of 4 soil test borings, laboratory testing of select soil samples, and preparation of this geotechnical report. This report briefly outlines the testing procedures, presents available project information, describes the site and subsurface conditions, and includes the approximate boring locations, boring logs, and recommendations regarding the following:

- General site development and subgrade preparation.
- Foundation types and depths, allowable bearing capacities, and estimates of potential settlement.
- Seismic site class and site coefficients according to the 2015 IBC criteria.
- Lateral soil load parameters for retaining wall design.
- Comments regarding factors that may impact construction and performance of the proposed project.

The scope of services did not include an environmental assessment for determining the presence or absence of wetlands or hazardous or toxic materials in the soil, bedrock, surface water, groundwater, or air, on or below, or

around this site. Statements in this report or on the boring logs regarding odors, colors, and unusual or suspicious items or conditions are strictly for informational purposes.

PSI did not provide any service to investigate or detect the presence of moisture, mold, or other biological contaminants in or around any structures, or any service that was designed or intended to prevent or lower the risk of the occurrence or the amplification of the same. The client should be aware that mold is ubiquitous to the environment with mold amplification occurring when building materials are impacted by moisture. Client should also be aware that site conditions are outside of PSI's control, and that mold amplification will likely occur, or continue to occur, in the presence of moisture. As such, PSI cannot and shall not be held responsible for the occurrence of, or recurrence of, mold amplification.

Laboratory consolidation testing for detailed analysis of settlement characteristics is not included in the present scope. However, consolidation settlements are not anticipated to be an issue for this project site.

2 SITE AND SUBSURFACE CONDITIONS

2.1 SITE LOCATION AND DESCRIPTION

The site for the proposed New Classroom Addition is at the Highland West Junior High School located at the northwest quadrant of NW 7th Place and N Santa Fe Avenue in Moore, Oklahoma. The latitude and longitude of the proposed construction site are approximately 35.3445°N and 97.5127°W, respectively. The site is the existing Highland West Junior High School and surface of the proposed project area is generally covered with grass and visually appears generally flat. Underground utilities exist in the areas of the proposed development. The ATV-mounted drill rig experienced no mobility difficulty in accessing the boring locations.

2.2 SUBSURFACE CONDITIONS

The site subsurface conditions were explored with 4 soil test borings. The borings were located in the field by the drilling crew with a handheld GPS device and by estimating distances from known site reference points.

The exploration was performed with a truck-mounted CME-55 drill rig equipped with an automatic hammer using a 140-pound hammer dropping 30 inches. Soil samples were routinely obtained during the drilling process. Drilling and sampling techniques were accomplished generally in accordance with ASTM procedures. The approximate location of the borings performed are presented on the boring logs.

Select soil samples were tested in the laboratory for evaluation and determination of material properties including moisture content, Atterberg limits, and fines content. Laboratory testing was accomplished generally in accordance with ASTM procedures.

The subgrade materials encountered in the borings consisted of lean and fat clays with various sand contents and shaley clay to depths of approximately 8 to 12½ feet below the surface. These materials are underlain by shale bedrock that extended to the boring depths of approximately 25 feet below the surface. Please refer to the attached boring logs for more specific information. The following table briefly summarizes the range of results from the field and laboratory testing programs:

General Range of Material Property Values						
Soil Description	Approx. Depth Range, ft.	Standard Penetration, N, blows/foot	TCP inches/100 Blows	Moisture Content, %	Percent Fines (Passing # 200 Sieve)	Liquid Limit, % Plastic Limit, % Plasticity Index
Fat CLAY (various sand contents)	0 – 3	5 – 15	-	18 – 27	86.7	LL=54 PL=19 PI=35
Lean CLAY (various sand contents)	0 – 12½	6 – 26	-	14 – 24	86.0 – 91.4	LL=30 – 44 PL=16 – 19 PI=11 – 27
Shaley CLAY	8 – 10½	36	-	-	-	-
SHALE (Bedrock)	8 – 25	PR	0.9 – 8.3	9 – 12	-	-

PR – Practical Refusal

2.2.1 SOIL CORROSIVITY LABORATORY TESTING

PSI performed laboratory testing on a select soil sample of Boring DB-3 to assess the pH and water-soluble sulfate content. The water-soluble sulfate testing was performed in general accordance to the ODOT's OHD L-49. The pH testing was performed in general accordance to the ASTM G51. The results of the tests are summarized and provided in the table below:

Water Soluble Sulfate Test Results				
Boring	Depth (ft)	Soil pH	Sulfate Content	
			ppm (mg/kg)	Percent by Weight
DB-3	3	7.8	360	0.036

The above subsurface description is of a generalized nature to highlight the major subsurface stratification features and material characteristics. The boring log included in the Appendix should be reviewed for specific information at the boring location. The boring log includes soil/rock descriptions, stratifications, penetration resistances, and locations of the samples. The stratifications shown on the boring log represent the conditions only at the actual boring location. Variations may occur and should be expected at other building section locations. The stratifications represent the approximate boundary between subsurface materials and the actual transition may be gradual. Water level information obtained during field operations is also shown on the boring log. The samples that were transported to the laboratory will be retained for 60 days from the date of this report and then discarded.

2.3 GROUNDWATER INFORMATION

Groundwater was observed to collect in Borings DB-3 and DB-4 at depths of approximately 15 feet during drilling and at depths of approximately 22 and 20 feet, respectively, after completion of drilling. Groundwater was not observed to collect in Borings DB-1 and DB-2 during drilling nor upon completion of drilling, indicating measurable groundwater may be below the maximum depths of the borings or the groundwater may require additional time to stabilize in the open holes. Groundwater can exist at varying depths during other times of the year depending upon climatic and rainfall conditions. Discontinuous zones of perched water can exist within the overburden materials and/or at the contact with bedrock.

3 EVALUATION AND RECOMMENDATIONS

3.1 GEOTECHNICAL DISCUSSION

The geotechnical related recommendations presented in this report have been developed on the basis of the subsurface conditions encountered and PSI's understanding of the proposed project. Should changes in the project criteria occur, a review must be made by PSI to determine if modifications to the recommendations will be required. The performance of the construction will be dependent upon site preparations and the shear strength of the overburden soils and the underlying bedrock.

There is a primary geotechnical related concern at this project site that should be expected to affect lightly loaded grade supported elements such as floor slab type constructions. The concern involves the shrink/swell potential of the upper soils encountered in some of the borings. The concern is discussed in the report subsection below.

3.1.1 SWELL POTENTIAL CLAYS

Medium to high plasticity clay soils with moderate to high shrink/swell potentials were encountered in the upper soil strata of the borings. Some of these moderate to high shrink/swell potential materials are expected to exhibit significant volume changes with variations in subgrade moisture. The calculated Potential Vertical Rise (PVR) for slab-on-grade type construction at this project site could be up to 2 inches for these soils, assuming that the medium to high plasticity subgrade materials are allowed to increase in moisture content from a relatively dry condition to a relatively wet condition over a depth of approximately 8 feet. The relatively dry condition can occur with severe dry weather situations, thereby resulting in a significant degree of shrinkage and eventual potential swell in the foundation material. Differential movements are expected to be about ½ of the PVR. However, it should be noted that for extreme conditions (i.e., soils dry and shrink in one area with soils in another area being exposed to water and swelling) differential movement can be equal to or even double the PVR.

A reduction in potential vertical movement can be achieved by supporting the floor slab on a minimum of 2 feet of properly compacted low plasticity structural fill or modified existing soils to reduce the calculated PVR to 1 inch or less. However, due to the potential for "bathtub effect" usually created by granular structural fill replacing and overlying relatively low permeability clay material in undercut areas, PSI recommends the amount of material in the structural fill passing the #200 sieve not be less than 60 percent, at least in replacing the undercut. The greater the structural fill or modified existing soil (used as structural fill) thickness beneath the slab, the less the probability of structural distress due to shrinkage and swelling of the clay soils. The structural fill should extend a minimum of 5 feet beyond the edges of the structure. The desired thickness of fill can be provided by raising the site grade with the properly compacted recommended materials or undercutting and replacing with the recommended materials. Proof-rolling and visual observation, as discussed later in this report, should be accomplished to aid in identifying soils which should be removed from the floor slab area prior to fill placement and/or floor slab construction.

3.1.1.1 LIME, CEMENT, OR FLY ASH STABILIZATION

The existing medium to high plasticity clay subgrade soils with moderate to high shrink/swell potential can also be modified with hydrated lime, Portland cement, or class 'C' fly ash from a source approved by ODOT and used as structural fill. This will also reduce potential for "bathtub" effect when used as backfill in undercuts. Stabilizing the subgrade soil with an estimated 5 to 7 percent cement or lime or an estimated 12 to 14 percent fly ash, by dry weight, will reduce the potential volumetric changes due to the high shrink/swell potential soils. The actual

cement, lime, or fly ash percentage should be determined based on laboratory tests after the source of the stabilizing agent has been determined.

3.1.2 BUILDING ADDITION CONSIDERATIONS

Information about the existing building foundations is not available to PSI. For new footings in proximity of existing foundation, additional stress may and should be expected to be exerted on the subsurface material supporting the existing footings. The additional stress may result in additional settlement of the footings supporting the existing structures. Generally, the deeper the new foundation and the closer the new foundation will be to the existing foundation, the higher the potential for the additional settlements. If shallow foundations are considered and if practical for the new foundation, PSI recommends as much separation as possible between the old and new foundations. Evaluation of the influence may be based on a straight-line projecting outward and downward at an angle of 45° from the bottom of the new footing. The line not intersecting the lower existing footing and vice versa may be considered adequate and non-influential; else, additional stress analysis will be required. However, it is recommended the existing footing also be monitored during construction.

3.2 GEOLOGIC UNIT

Division Three publication of the "Engineering Classification of Geologic Materials" manual published by ODOT indicates the project site is underlain by the Hennessey Unit (Phy) in Cleveland County.

This unit consists of red platy to blocky clay shales and mudstone. The mudstones are hard and appear blocky. The red clay shale of the Hennessey Unit is characterized by numerous bands of streaks of white or light green color ranging from a few inches to four feet in thickness. Small spheres of light green color up to 10 inches in diameter are an odd characteristic of the unit.

The total thickness of the unit varies from 400 to 600 feet.

The Hennessey Unit outcrops in a 5 to 20 miles wide north-south band across Cleveland, McClain, and Garvin Counties in Division 3.

Topographically, the unit is near level to gently rolling prairies, but most of the more level outcrops of the unit are cultivated.

3.3 SEISMIC INFORMATION

The 2015 International Building Code requires a site class for the calculation of earthquake design forces. This class is a function of soil type (i.e. depth of soil and strata types). Based on the type of materials encountered to the boring termination depths and the estimated shear strength of the soil at the boring locations, Site Class C is recommended. The IBC-2015 probabilistic ground motion values near the project site are as follows:

Seismic Design Parameters			
Period (seconds)	2% Probability of Event in 50 years (g)	Site Coefficient F_a	Site Coefficient F_v
0.2 (S_s)	0.273	1.2	N/A
1.0 (S_1)	0.079	N/A	1.7

S_{DS}: 0.218g
S_{D1}: 0.089g
PGA: 0.162g
PGA_M: 0.195g (Site modified peak ground acceleration)
Seismic Design Category (SDC): B

3.4 SITE PREPARATION

Vegetation, topsoil, deleterious materials, and soft and loose soil in the construction area should be stripped from the site and either wasted or stockpiled for later use in non-load bearing areas such as landscaping. The depth of removal should be determined by a representative of the Geotechnical Engineer at the time of construction.

After stripping and excavating to the proposed subgrade level, the construction area should be proof rolled with a tandem axle dump truck or similar rubber-tired vehicle. Soils which are observed to rut or deflect excessively (typically greater than 1 inch) under the moving load (typically 9 tons/axle) should be undercut and recompacted in place or replaced with properly compacted recommended fill. The recompacted soil or imported structural fill or engineered fill should be moisture conditioned during placement. The proof-rolling and undercutting activities should be witnessed by a representative of the Geotechnical Engineer and should be performed during a period of dry weather. Access to compaction equipment may be limited in some of the proposed construction areas due to existing building. Other modes of compaction and site preparation, such as walk-behind portable compaction machines may be applicable.

After proof-rolling and correcting soft areas or areas exhibiting rutting or pumping, the subgrade soils should be scarified and compacted for a depth of at least 8 inches below the surface.

After subgrade preparation and testing have been completed, fill placement that will be required to establish site design grades should begin. The first layer of fill material should be placed in a relatively uniform horizontal lift and adequately keyed into the stripped and scarified subgrade soils. PSI recommends fill materials be free of organic or other deleterious material, have a maximum particle size less than 3 inches, have a liquid limit not more than 35 and plasticity index in the range of 5 to 18 and percent of fines passing the #200 sieve not less than 60 percent, at least in replacing undercuts. The on-site soils generally do not appear suitable for use as structural fill without modification/stabilization as previously discussed but may be stockpiled for later use in non-load bearing areas such as landscaping. Accurate moisture control will be required to achieve the recommended degree of compaction. Structural fill should be compacted to at least 95 percent of standard Proctor maximum dry density as determined by ASTM D698.

Fill should be placed in maximum lifts of 8 inches of loose material and should be compacted at a moisture content ranging from -2 to +3 percentage points of optimum moisture content. Stabilized materials should be placed at a minimum water content of 2 percentage points above the optimum moisture content. If water must be

added, it should be uniformly applied and thoroughly mixed into the soil by disking or scarifying. Each lift of compacted engineered fill should be tested by a representative of the Geotechnical Engineer prior to placement of subsequent lifts. The edges of compacted fill should extend a minimum of 5 feet beyond the edges of the proposed structure prior to sloping on as flat a gradient as practical. Care should be taken to apply compaction effort throughout the entire fill area.

For structural fill, PSI recommends that such fill be tested by a Geotechnical Technician and directed by a Geotechnical Engineer to monitor and document the placement of fill material. It should be noted that the Geotechnical Engineer of record can only certify the testing that is performed, and the work observed by that engineer or staff in direct report to that engineer. PSI recommends that the fill be monitored in general accordance with the following table:

Fill Placement Criteria				
Material Tested	Proctor Type	Min % Dry Density	Placement Moisture Content Range from OMC	Frequency of Testing (Based on 8-inch lifts)
Structural Fill	Standard	95%	-2 to +3%	1 per 2,500 ft^2 of fill placed
Stabilized Existing Soil			≥+2%	
Random Fill (non-load bearing)	Standard	90%	-2 to +3%	1 per 10,000 ft^2 of fill placed
Utility Trench Backfill	Standard	95%	-1 to +3%	1 per 200 cy of fill placed

A minimum of 3 field density tests per lift is recommended. If the borrow or source of fill changes, a new reference moisture/density test should be performed.

The overall performance of the construction will also depend on how well the site drains during the construction and the life of the structure. Grading of the site around the structure's pads should be accomplished to enable positive drainage away from the pads by providing an adequate gradient. The surface gradient provided will be dependent on the landscaping type and vegetation. Water infiltration and seepage into the foundation should be avoided as much as possible. If it is possible for water to collect beneath the foundation and foundation areas, it will be necessary to use interceptor drains to remove the collected water.

Excavation for utility trenches should be performed in accordance with OSHA regulations as stated in 29 CFR Part 1926. It should be noted that utility trench excavations have the potential to degrade the properties of the adjacent fill materials. Utility trench walls that are allowed to move laterally can lead to reduced bearing capacity and increased settlement of adjacent structures and structural elements.

Backfill for utility trenches is as important as the original subgrade preparation or structural fill placed to support foundations. Unless otherwise specified, the backfill for the utility trenches should be placed in 4- to 6-inch loose lifts and compacted to a minimum of 95% of the maximum dry density achieved by the standard Proctor test. The backfill soil should be moisture conditioned in the range of 1 percentage point below to 2 percentage points above the optimum moisture content value as determined by the standard Proctor test. Up to 4 inches of bedding material placed directly under the pipes or conduits placed in the utility trench can be compacted to the 90% compaction criteria with respect to standard Proctor maximum dry density. Compaction testing should be

performed for every 200 cubic yards of backfill placed or for each lift within 200 linear feet of trench, whichever is less. Backfill of utility trenches should not be performed with water standing in the trench. Structural fill should be used as the trench backfill material.

3.5 SHALLOW FOUNDATION RECOMMENDATIONS

The types and depths of foundations suitable for a given structure depend on several factors including the subsurface conditions, the functions of the structure, the loads they will carry, the external (lateral and uplift) forces they will resist, and the cost of the foundations. A conventional type spread footing foundation system or a monolithic slab-on-grade foundation system (conventionally reinforced or post-tensioned) may be considered for support of the building units. PSI has provided in this report section parameters that may be considered for the recommended shallow foundation systems.

A shallow foundation system may be considered for the support of the building, based on the subsurface conditions encountered by the borings. PSI has provided recommendations for both a conventional type spread/continuous footing foundation system and a monolithic slab-on-grade foundation system (reinforced or post-tensioned) for consideration and support of the proposed structure.

3.5.1 CONVENTIONAL SPREAD FOOTING RECOMMENDATIONS

The planned structure may be supported on conventional spread footing foundations. Spread footings for columns and continuous wall footings bearing on the existing soil or properly compacted structural fill or modified existing fill, as discussed, can be designed for allowable unit bearing pressures of 3,500 psf and 2,500 psf, respectively, based on dead load plus design live load. Foundation elements should bear a minimum depth of 2 feet below the final grade for frost protection. The allowable bearing capacities are based on a factor of safety of 3.

It is important that PSI observes and documents the footing excavations prior to concrete placement. Minimum dimensions of 24 inches for square footings and 18 inches for continuous wall footings should be used in design of the footings to reduce the possibility of a local bearing capacity failure.

The foundation excavations should be observed by a representative of PSI prior to steel or concrete placement to document that the foundation materials are consistent with the materials discussed in this report. Soft or loose soil zones encountered at the bottom of the footing excavations should be removed to the level of acceptable residual soils or adequately compacted structural fill as directed by the Geotechnical Engineer. The bottom of the footings should be probed to identify and locate soft areas. Cavities formed as a result of excavation of soft or loose soil zones should be backfilled with lean concrete or properly compacted structural fill.

The uplift resistance of the foundations will be limited by the weight of the foundation concrete and soil above them and the dead weight of the structure. For design purposes, the ultimate uplift resistance should be based on effective unit weights derived from presumptive total unit weights of 120 pcf and 150 pcf for soil and concrete, respectively. A factor of safety of 2 should be applied to the uplift resistance.

Footing excavations should be observed, and concrete placed as quickly as possible to avoid exposure of the footing bearing surfaces to wetting and drying. Surface run-off water should be drained away from the excavations and not be allowed to pond. If possible, the foundation concrete should be placed during the same

day the excavation is made. If footing excavations are left open for more than 1 day, they should be protected to reduce evaporation or entry of moisture.

Based on the known subsurface conditions, site geology, laboratory testing, anticipated loading, and allowable bearing pressures, properly designed and constructed footings for the building supported on the properly compacted recommended materials should experience maximum total and differential settlements between adjacent columns of less than 1 inch and ¾ inch, respectively.

3.5.2 MONOLITHIC SLAB-ON-GRADE FOUNDATION RECOMMENDATIONS

As an alternative to remediation of the existing subgrade for the new construction due to the medium high to high plasticity clay and the existing undocumented fill, the use of alternative type of foundation such as a monolithic slab type foundation may be considered. PSI has not performed a cost/benefit analysis of suitable foundation type for the project.

If additional movements can be tolerated, a steel-reinforced (conventional or post-tension reinforcing) slab on-grade foundation system (with or without waffle-type grade beam configuration) may be considered for support of the proposed structure. The slab-on-grade foundation system may be supported on the existing subgrade material, provided the associated expected movements can be tolerated, or structural fill as recommended. The thickened edge portion may also be supported on the existing soils or the structural fill.

Structural fill should consist of materials as described in the Site Preparation and Fill Materials section of this report. Proof rolling, as discussed earlier in this report, should be accomplished to identify any soft or unstable soils that should be removed from the slab area prior to fill placement and floor slab construction. Select fill required to achieve grade should extend a minimum 5 foot beyond the perimeter of the slab. Fill soil below the slab should be moisture conditioned.

Thickened edges supported on properly compacted existing soils or structural fill materials may be designed using a maximum allowable unit bearing capacity of 2,000 pounds per square foot based on dead load plus design live load considerations. The grade beams should have a minimum width of 10 inches even if actual bearing pressure is less than the design value. If frost heave is a design consideration, the perimeter grade beams should bear at least 24 inches below adjacent surface grades. If soft or very loose soils are encountered at the design bearing level, they should be undercut to stiff residual soils and the excavation backfilled with concrete or controlled low strength material (CLSM) or properly compacted fill.

Several design methods use the modulus of subgrade reaction, k, to account for soil properties in design of flat grade-supported floor slabs. Based on our laboratory test results and the slab recommendations provided in this document, k-value of 120 pounds per cubic inch (pci) may be used in the grade slab design based on values typically obtained from 1 ft x 1 ft plate load tests. However, depending on how the slab load is applied, the value will have to be geometrically modified. The value should be adjusted for larger areas using the expression/formula presented in the “Floor Slab Recommendations” section of this report.

Uniform compaction of fill materials is important to reduce total and differential settlements. If the site is prepared as recommended, and based on the anticipated loading conditions, total and differential settlements of the foundation should be about 1 inch and ½ inch, respectively, or less. To reduce moisture problems below the floor slab, a vapor retarder such as polyethylene sheeting should be provided beneath the slab. PSI recommends that a minimum four-inch-thick, free draining granular mat be placed beneath the slab. Adequate

construction joints, as necessary, and reinforcement should be provided to reduce the potential for cracking of the floor slab due to differential movement. The design should take into account the added effect of trees and non-seasonal moisture sources, such as irrigation, plumbing or drainage leaks and poor surface drainage.

The foundation excavations should be observed by a representative of PSI prior to concrete placement to assess that the foundation materials are capable of supporting the design loads and are consistent with the materials discussed in this report. Soft or loose soil zones encountered at the bottom of the excavations should be removed to the level of firm soils or adequately compacted fill or stabilized soil as directed by the Geotechnical Engineer. Cavities formed as a result of excavation of soft or loose soil zones should be backfilled with lean concrete or recommended fill, as determined by the Geotechnical Engineer.

Surface run-off water should be drained away from the excavations and not be allowed to pond. The structures' foundation concrete should be placed during the same day the excavation is made. If it is required that excavations be left open for more than one day, they should be protected to reduce evaporation or entry of moisture. Consideration should be given to the use of interceptor drains to collect and remove water accumulating around the perimeter and underneath the slab. The interceptor drains could be incorporated with the storm drains of other utilities located on-site.

3.6 DRILLED PIER FOUNDATION RECOMMENDATIONS

It is anticipated drilled pier foundations are also under consideration for support of the proposed classroom additions. Properly sized straight shaft cast-in-place concrete drilled piers bearing in the shale bedrock material can be used for the project.

The piers should be founded in the shale bedrock a minimum of 2 feet or one pier diameter, whichever is greater, and should be a minimum length of 10 feet or a length to diameter ratio (L/D) not less than 3, whichever is deeper, below the grade beam. The piers founded as recommended can be designed for allowable unit end-bearing capacity of 22,500 psf and allowable unit skin friction capacity of 1,200 psf, based on dead load plus design live load. The skin friction capacities are applicable to the portion of drilled shaft extended beyond the recommended minimum length into the bearing material. The allowable values are based on factors of safety of 2 and 3 for end bearing and skin friction, respectively.

The piers should be reinforced for the full depth to resist uplift forces due to the expansive clays. Reinforcement quantity should be adequate to resist tensile uplift forces generated by the clay soils equal to 600 psf over the upper 8 feet of the pier shaft. The piers should be designed after considering the dead load, the friction force in the rock, and the uplift force within the active depth.

Piers should be designed with a shaft diameter of at least 18 inches. Properly constructed piers bearing in the recommended bearing materials should experience total maximum settlement on the order of ½ inch or less.

It may be difficult for the drilling contractor to determine or identify proper recommended bearing material. Therefore, it is recommended PSI perform the pier construction observations and documentation.

The pier construction should also be observed by a representative of the Geotechnical Engineer to assess that the foundation materials have adequate strength to support the design loads and are consistent with the

materials recommended in this report. Particular attention should be given to observation at locations where soil sloughing or groundwater inflow problems may occur.

Soft or loose soil zones encountered at the bearing level should be removed from the drilled shafts. If the exposed bearing material becomes significantly wet or dry, it should be removed, and the pier deepened until more uniform moisture conditions are achieved. Concrete should be placed in the piers the same day they are excavated to prevent weakening of the shaft wall and bottom.

Although not anticipated, slurry and/or casing may be required to advance the drilled piers, especially if sloughing soil or groundwater is encountered. Concrete placed in the piers should have a slump in the range of 5 to 7 inches. This range of slump will help to reduce the potential for formation of voids, especially as casing is extracted. The concrete mix should be designed to attain the required strength when placed at such a slump. The drilled shafts should be filled with concrete as soon as practical to reduce the potential of groundwater related problems and weathering of the excavation wall. During simultaneous concrete placement and casing removal operations, sufficient concrete head should be maintained inside the casing to offset hydrostatic head outside the casing, and to prevent the intrusion of soil and possible groundwater into the pier concrete, if present.

3.6.1 LATERAL RESISTANCE DESIGN PARAMETERS

For drilled shafts, the soils and bedrock as well as the rigidity of the shaft will resist the lateral loads applied to the shaft. Lateral load analysis can be performed based on methods ranging from chart solutions to the ‘p-y’ approach utilizing computer programs such as LPILE or the public domain COM624.

The lateral design information regarding the 'p-y' data is provided in this section. The relationship between the soil resistance (p) and pile deflection (y) is commonly referred to as 'p-y'. Along the depth of the shaft, soil resistance (p) is expressed as a non-linear function of lateral shaft deflection (y). Various researchers developed 'p-y' criteria for different kinds of soils. The 'p-y' curves can be automatically generated utilizing the computer program LPILE or the public domain COM 624. The program LPILE was developed by Lymon Reese and Shin-Tower Wang, Ensoft, Inc. and based on the COM 624 developed for the FHWA by the authors and made available by the FHWA. The parameters for generation of ‘p-y’ criteria from LPILE as well as COM 624 are provided for the analyses of the shafts.

Parameters to Be Used in the Lateral Load Analyses					
Stratum	‘p-y’ Criteria	**Total Unit Weight, γ (pcf)	Ø (deg.) or S_u or Q_u (psf)	***K_s or $K_{unsat.}$(pci) or K_c or $K_{sat.}$ (pci) or E (psi)	***ε_{50} or K_{rm} or RQD
I*	Clay Criteria	120	S_u = 1,500	K_s = 500 or K_c = 200	ε_{50} = 0.0070
II	Clay Criteria (Shaley)	130	S_u = 5,400	K_s = 1,800 or K_c = 720	ε_{50} = 0.0042
III	Rock Criteria	135	Q_u = 15,000	E = 50,000	k_{rm} = 0.0003 RQD = 50% (idealized)

Note: S_u: Undrained Shear Strength (psf); Q_u: Unconfined Compressive Strength (psf); ϕ, Angle of Internal friction; K_{unsat}: modulus of subgrade reaction (pci) for unsaturated soil condition; K_{sat}: modulus of subgrade reaction (pci) for saturated soil condition; K_s: modulus of subgrade reaction (pci) for static loading condition; K_c: modulus of subgrade reaction (pci) for cyclic loading condition; E: Initial modulus (psi); ε_{50}: strain corresponding to one-half the principle stress. K_{rm}: a constant for overall stiffness; RQD: Rock Quality Designation.

* Neglect the top 3' of Stratum I soils for the lateral load analysis appropriately based on the location of the pile head
** For submerged portion of pier, use effective unit weight γ'
***It may be possible to default to the computer program generated values

PSI can assist in performing the lateral response analysis under a separate work proposal.

3.7 FLOOR SLAB RECOMMENDATIONS

The building's grade supported floor slab used in conjunction with the conventional spread footing or drilled pier and grade beam foundation system should be supported on a minimum 2 feet of properly compacted structural fill or modified existing soil used as fill. When supported on a minimum 2 feet of the recommended materials, the potential vertical rise (PVR) is expected to be 1 inch or less. Proof-rolling, as discussed earlier in this report, should be accomplished to identify soft or unsuitable soils that should be removed from the floor slab areas prior to fill placement and floor slab construction. Fill soils under the slabs should be moisture conditioned at or above the optimum moisture content throughout the construction process.

For the properly compacted structural fill and existing soil, modulus of subgrade reaction, *k,* value of 120 pounds per cubic inch (pci) may be used in the grade slab design based on a 1 ft. x 1 ft. plate load test. However, depending on how the slab load is applied, the value will have to be geometrically modified. The value should be adjusted for larger areas using the following expression for cohesive and cohesionless soils:

Modulus of Subgrade Reaction,

$k_s = \frac{k}{B}$ for cohesive soil, and

$k_s = k\left(\frac{B+1}{2B}\right)^2$ for cohesionless soil (not recommended for replacing undercut in relatively impermeable soils)

where:

k_s	=	coefficient of vertical subgrade reaction for loaded area,
k	=	coefficient of vertical subgrade reaction for 1x1 square foot area,
B	=	width of area loaded, in feet (or effective width, B', for grade beam, continuous footing, or mat/raft foundation)

PSI recommends that a minimum four-inch thick free draining granular mat be placed beneath the building floor slabs to enhance drainage. Prior to placing drainage layer, the subgrade should be graded to drain and not provide pockets to trap water. In moisture sensitive areas for equipment and flooring, vapor retarder should be installed with the grade supported slab construction according to ACI criteria. The floor slabs should have an adequate number of joints to reduce cracking resulting from differential movement and shrinkage.

3.7.1 STRUCTURAL SLAB

As an alternative to providing a minimum of 2 feet of suitable material below grade supported floor slab, a structural slab with a minimum of 4 inches of void space along with the drilled pier and grade beam foundation system may be considered. The 4-inch void space should be provided below the slab and the grade beam elements. If a structural slab as recommended above is used, removing and replacing 2 feet of the existing soil will not be required.

3.8 LATERAL EARTH PRESSURE RECOMMENDATIONS

It is anticipated a below grade earth retention system may be required as part of the proposed construction. To control hydrostatic loading on earth retention systems, it is recommended that a perforated drainpipe be installed at the footing level. The drainpipe should be sloped to provide positive drainage to a sump where water can be collected and removed or to a site storm sewer/drainage. The drain line should be wrapped with filter fabric to prevent intrusion of fines and backfilled with free draining granular material extending vertically above the drain line to within 1 foot of final grade. The granular section behind the earth retention system should have a minimum width of 1 foot and should be encapsulated in a suitable filter fabric to minimize intrusion of fines. The remaining portion of the excavation should be backfilled with structural fill or completed with granular material. The use of a prefabricated drainage blanket on the earth retention system may also be considered to prevent hydrostatic loading. Drainage blankets should be installed in accordance with manufacturer's recommendations.

The actual earth pressure on the walls will vary according to the type of material to be retained and backfill materials used and how the backfill is compacted. The equivalent fluid pressures (γ_{eq}) presented below, provide lateral earth pressures for design of walls using compacted granular backfill where the cut slope, if applicable, is 60° or less from the horizontal and for existing soil and structural backfill soil, and are applicable for a horizontal surface behind the earth retention system.

Lateral Soil Resistance Design Parameters								
Soil Supported	Angle of Internal Friction, ϕ	Lateral Coefficient, K			Presumptive Total Unit Weight, pcf	Equivalent Fluid Unit Weights, γ_{eq}, psf/ft		
		Active, K_a	Passive, K_p	At-Rest, K_o		Active	Passive	At-Rest
Granular Soil Placed	32°	0.31	3.25	0.47	115	35	374	54
In-Situ Shaley Clay Soil	25°	0.41	2.46	0.58	130	53	320	75
In-Situ Clay Soil	20°	0.49	2.04	0.66	120	59	245	79

The at-rest values should be used if walls cannot yield at top during backfilling and service conditions and passive pressure values should be used where the structure will push into the soil. The active condition is applicable where the ratio of the horizontal movement of the top of the wall to the wall height is equal to or greater than *1/240.*

If granular soil is utilized at the base of the structure, ultimate base friction coefficient of 0.53 may be considered and if granular support is not provided at the base of the structure an ultimate base adhesion value of 600 psf may be considered. An appropriate factor of safety should be applied.

Typically, only half of the passive pressure may be used to resist lateral loads due to the amount of strain required to fully mobilize the passive pressure. The above values of equivalent fluid pressure are based upon horizontal grade at the top of the wall including no surcharge loads within a distance that is twice the wall height.

Since specific information about potential backfill material is not available for this report, PSI estimates the material may also consist of compacted clays or silts, apart from sand or structural fill assumed above, or combinations. For compacted lean clay and sandy silt, the following lateral pressure coefficient values behind the wall can be considered when applicable.

Compacted Soil Lateral Pressure Coefficients				
Soil Type	Active		At-Rest	
	K_a	γ_{eq}, psf/ft	K_o	γ_{eq}, psf/ft
Clay	0.59	74	0.74	93
Silt	0.53	66	0.69	86

$\gamma_{eq,}$ - equivalent fluid pressure

When loads including traffic are present near wall, the wall should be designed to resist an additional uniform lateral load based on the active coefficient. This additional traffic load may be taken as a 2-foot surcharge load with a total unit weight of 125 pcf. Care should be exercised during the backfilling of the walls to prevent overstressing and damage to the walls. Sub-drains should be installed to avoid the buildup of hydrostatic pressure behind the retaining walls.

The following illustration provides general requirements for the design and installation of retaining walls.

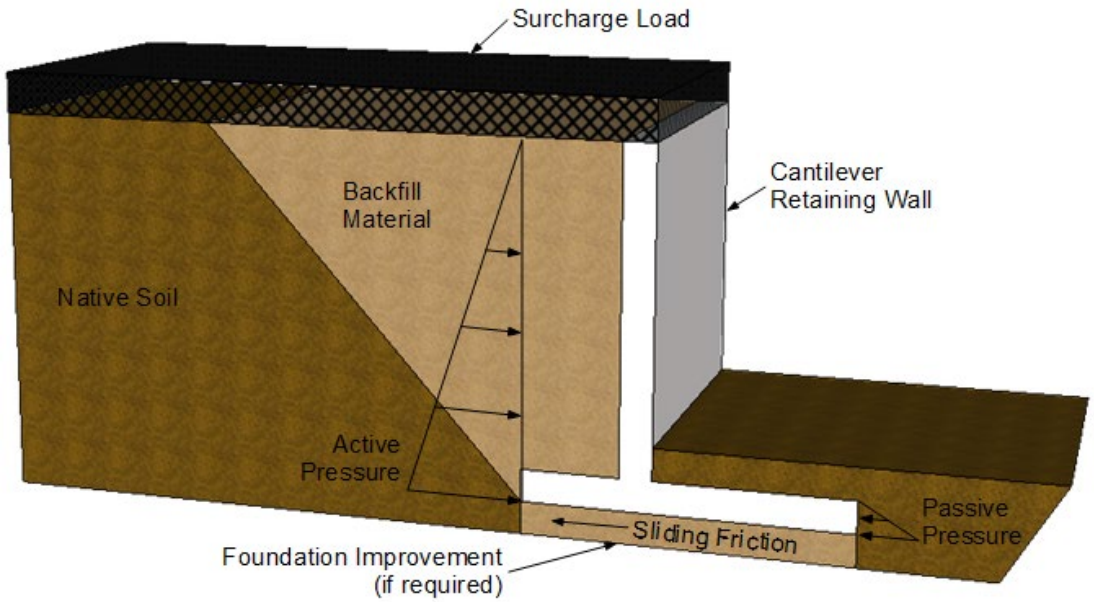

3.9 CORROSIVITY OF SOIL

The concentration of water-soluble sulfates is considered to be a good indicator of the potential for chemical attack on concrete. PSI performed pH and soil water soluble sulfate content tests of a select soil sample from the project site. The results are reproduced below:

Water Soluble Sulfate Test Results				
Boring	Depth (ft)	Soil pH	Sulfate Content	
			ppm (mg/kg)	Percent by Weight
DB-3	3	7.8	360	0.036

Based on the ACI Manual of Concrete Practice (ACI 201.2R-10) or (ACI 318/318R-33), the amount of water-soluble sulfates in soil can be used to evaluate the need for protection of concrete based on the following table:

REQUIREMENTS FOR CONCRETE EXPOSED TO SULFATE	
Water Soluble Sulfate in soil (percent by weight)	Sulfate Exposure
0.00 to 0.10	Negligible or Class 0 Exposure
0.10 to 0.20	Moderate or Class 1 Exposure
0.20 to 2.00	Severe or Class 2 Exposure
Over 2.0	Very Severe or Class 3 Exposure

Based on the test result, the water-soluble sulfates ion concentration is relatively low and the potential for reactions within concrete exposed to sulfates is in the Negligible or Class 0 exposure. The evaluation of soluble sulfate content contained within the selected sample indicates that any cement type may be used at this site. The actual cement type to be used should be determined by the project Structural Engineer.

The corrosion potential of the soils as regards buried conduits and metals may be dependent on the acidity and/or basicity (pH value) of the soil. The results of laboratory pH tests performed on selected soil samples obtained from drilling are indicated in the following table:

Resistivity (ohm-cm) and pH			
Boring No.	**Depth (ft)**	**pH**	**Corrosivity**
DB-3	3	7.8	Moderately Corrosive

Based upon the corrosivity test results, the soils can be considered moderately corrosive to underground metallic conduits. Therefore, metal pipe may be used, but should be analyzed by the structural/corrosion engineer for protection recommendations.

However, generally for risk of corrosion, it should be noted that the building area contained 1 main mapped soil series, the Kirkland-Urban land-Pawhuska complex, based on the USDA/NRCS web based published information.

The components of the soil complex are rated as moderate risk of corrosion to concrete and high risk of corrosion of uncoated steel for Kirkland soil and high risk of corrosion to concrete and high risk of corrosion of uncoated steel for Pawhuska soil. Properties of Urban land soils could vary significantly and cannot be readily quantified.

4 PAVEMENT RECOMMENDATIONS

4.1 SUBGRADE SOIL PREPARATION

PSI has based its recommendation on subgrade soils prepared to achieve a minimum CBR value of 3, with proper proof-rolling and the site not being wet at the time of construction. The pavement subgrade should be prepared as discussed in the "Site Preparation" section of this report.

4.2 PAVEMENT DESIGN

The PSI scope of services did not include extensive sampling or CBR testing of the existing subgrade or potential sources of imported fill for the specific purpose of detailed pavement analysis. Instead, PSI has estimated pavement related design parameters that are considered to be typical for the area and soil types.

The recommended pavement sections presented below are considered minimum for the pavement design parameters used. PSI understands that non-technical considerations sometimes result in thinner pavement sections than those presented. However, the client, the owner, and the project principals should be aware that thinner pavement sections might result in increased maintenance costs and lower than anticipated pavement life.

Pavement sections were evaluated using Pavement Assessment Software (PAS) which is based on the 1993 AASHTO Design equations; a reliability factor of 85%; and a flexible pavement 18-kip single axle load (ESAL) of 13,000 for standard duty (car parking) and 48,000 for heavy duty parking areas and drive areas. The design life for standard duty and heavy-duty pavements are 10 years and 20 years, respectively. Flexible Pavements were evaluated based on an initial serviceability of 4.2 and a terminal serviceability of 2.0. Rigid pavements were evaluated based on an initial serviceability of 4.5, a terminal serviceability of 2.0, and an unreinforced concrete mix with a 28-day modulus of rupture of 650 psi (approximately 3,500 psi compressive strength). The pavement sections presented for the rigid pavements represent minimum thickness recommendations by PSI and the ESAL loads are in excess of 0.2 million. PSI should be contacted if traffic loads, especially truck traffic in loading areas and the frequency idealized, are greater than used in the analysis. Pavement materials should conform to local and state guidelines, if applicable.

Flexible Pavement Thickness (Inches)		
Pavement Materials	Light Duty	Heavy Duty
Asphaltic Surface Course	1½	2
Asphaltic Base Course	2½	3
Stabilized Subgrade	8	8
ODOT Type A Aggregate Base (Optional)	6	

Rigid Pavement Thickness (Inches)		
Pavement Materials	Light Duty (minimum)	Heavy Duty (minimum)
Portland Cement Concrete	5	6
Stabilized Subgrade	8	8
ODOT Type A Aggregate Base (Optional)	4	

Water should not be allowed to pond behind curbs. In down grade areas, base stone should extend through the slope to allow any water entering the base stone a path to exit.

Proper finishing of concrete pavements requires the use of appropriate construction joints to reduce the potential for cracking. Construction joints should be designed in accordance with current Portland Cement Association (PCA) guidelines. Joints should be sealed to reduce the potential for water infiltration into pavement joints and subsequent infiltration into the supporting soils.

The design of steel reinforcement should be in accordance with accepted codes. The concrete should have a minimum compressive strength of 3,500 psi at 28 days. The concrete should also be designed with 5±1 percent entrained air to improve workability and durability. All pavement materials and construction procedures should conform to ODOT or appropriate city and county requirements.

Large front-loading trash dump trucks frequently impose concentrated front-wheel loads on pavements during loading. This type of loading typically results in rutting or cracking of the pavement and ultimately, pavement failures. **Therefore, we recommend that the pavement in trash pickup areas consists of a minimum 7 inches thick, reinforced concrete slab placed over a minimum 4-inches thick crushed stone base in addition to the required subgrade stabilization.**

4.2.1 CEMENT, LIME, OR FLY ASH STABILIZATION FOR PAVEMENT

To reduce the shrink/swell potential of the subgrade soils, the upper 8 inches of the subgrade soil should be stabilized with Portland cement, hydrated lime, or Class 'C' fly ash from a source approved by ODOT. Stabilizing the soil with an estimated 5 to 7 percent cement or lime or an estimated 12 to 14 percent fly ash, by dry weight, will reduce the potential volumetric changes due to the medium high to high shrink/swell potential soil and extend the life of the pavement. The actual cement, lime or fly ash percentage should be determined based on laboratory tests after the source of the stabilizing agent has been determined.

5 CONSTRUCTION CONSIDERATIONS

5.1 EXCAVATIONS

The following is provided in this report for the client's information. In Federal Register, Volume 54, No. 209 (October 1989), the United States Department of Labor, Occupational Safety and Health Administration (OSHA) amended its "Construction Standards for Excavations, 29 CFR, part 1926, Subpart P". It is mandated by this Federal regulation that excavations, whether they be utility trenches, basement excavations or footing excavations, be constructed in accordance with the new OSHA guidelines. It is PSI's understanding that these regulations are being strictly enforced and if not closely followed, the owner and the contractor could be liable for substantial penalties.

The contractor is solely responsible for designing and constructing stable, temporary excavations and should shore, slope, or bench the sides of the excavations as required to maintain stability of both the excavation sides and bottom. The contractor's "responsible person", as defined in 29 CFR Part 1926, should evaluate the soil exposed in the excavations as part of the contractor's safety procedures. In no case should slope height, slope inclination, or excavation depth, including utility trench excavation depth, exceed those specified in local, state, and Federal safety regulations.

PSI is providing this information solely as a service to the client. PSI does not assume responsibility for construction site safety or the contractor's compliance with local, state, and Federal safety or other regulations.

6 REPORT LIMITATIONS

The recommendations submitted are based on the available subsurface information obtained by PSI and details furnished by AGP for the proposed project. If there are revisions to the plans for this project or if deviations from the subsurface conditions noted in this report are encountered during construction, PSI should be notified immediately to determine if changes in the foundation recommendations are required. If PSI is not retained to perform these functions, PSI will not be responsible for the impact of those conditions on the project.

The Geotechnical Engineer warrants that the findings, recommendations, specifications, or professional advice contained herein have been made in accordance with generally accepted professional geotechnical engineering practices in the local area. No other warranties are implied or expressed.

After the plans and specifications are more complete, the Geotechnical Engineer should be retained and provided the opportunity to review the final design plans and specifications to check that PSI's engineering recommendations have been properly incorporated into the design documents. At this time, it may be necessary to submit supplementary recommendations. This report has been prepared for the exclusive use of AGP for the specific application to the proposed Moore Public Schools Highland West Junior High School New Classroom Addition in Moore, Oklahoma.

FIGURES

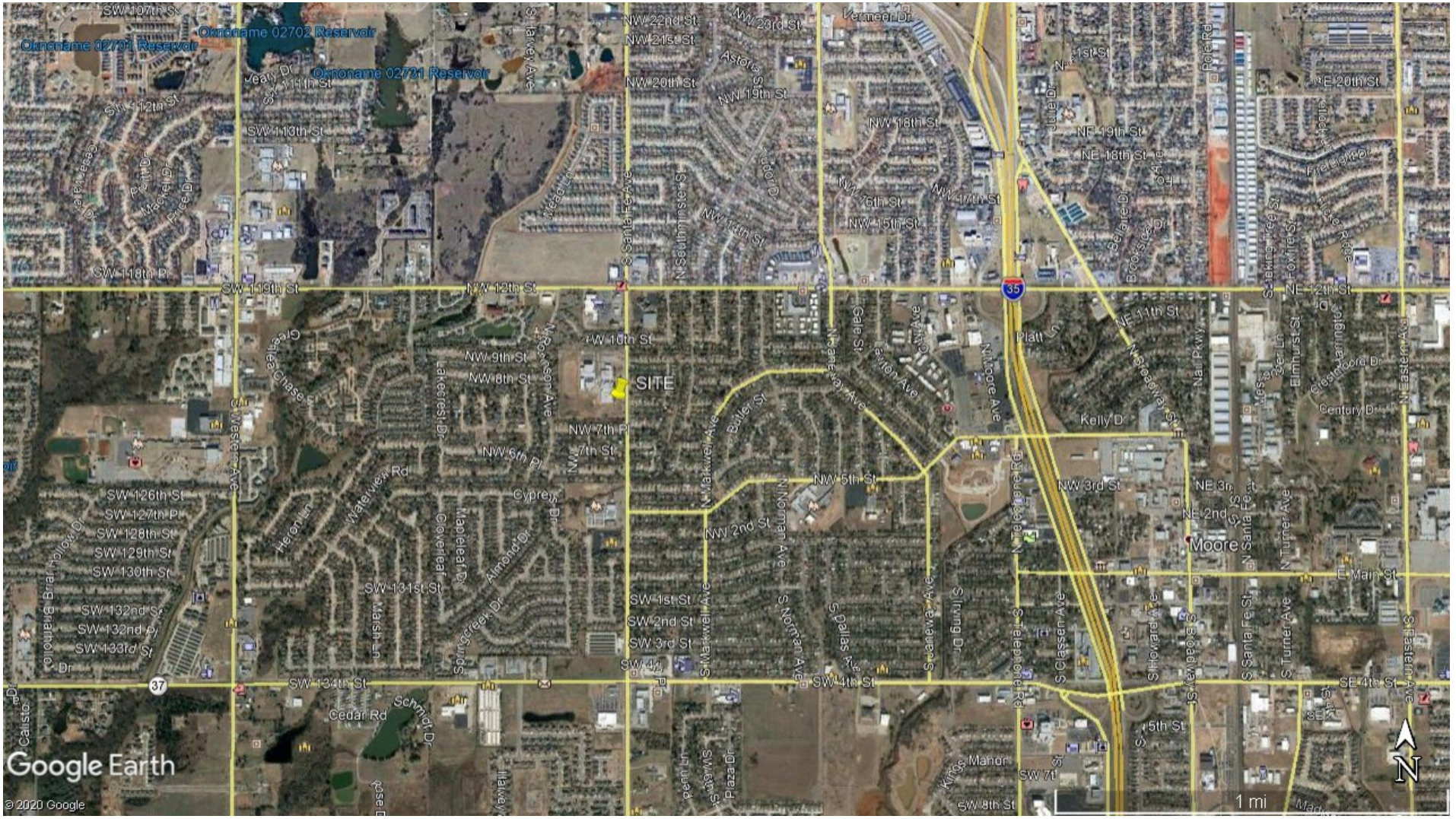

intertek psi	*Project* HIGHLAND WEST JUNIOR HIGH SCHOOL ADDITION—MOORE, OK	
	Drawing SITE VICINITY	*Project No.* 05462142-4
	Drawn By Y. Zhang	*Figure* **FIGURE 1**
	Date July 2020	

intertek psi	*Project* HIGHLAND WEST JUNIOR HIGH SCHOOL ADDITION—MOORE, OK	
	Drawing BORING LAYOUT PLAN	*Project No.* 05462142-4
	Drawn By Y. Zhang	*Figure* **FIGURE 2**
	Date July 2020	

LIST OF APPENDICES

APPENDIX A – BORING LOGS AND PROFILES

BORING DB-1

DATE STARTED:	3/25/20	**DRILL COMPANY:**	DSO
DATE COMPLETED:	3/25/20	**DRILLER:** T. Simpson	**LOGGED BY:** B. Long
COMPLETION DEPTH	25.0 ft	**DRILL RIG:**	ATV
BENCHMARK:	N/A	**DRILLING METHOD:**	Soild Flight Auger
ELEVATION:	100 ft	**SAMPLING METHOD:**	SS/TC
LATITUDE:	35.32732°	**HAMMER TYPE:**	Automatic
LONGITUDE:	-97.55017°	**EFFICIENCY**	N/A
STATION: N/A	**OFFSET:** N/A	**REVIEWED BY:**	A. Oyesanya

REMARKS:

Water		
While Drilling	None observed	
Upon Completion	None observed	
Delay	N/A	

BORING LOCATION:

Elevation (feet)	Depth, (feet)	Graphic Log	Sample Type	Sample No.	Recovery (inches)	MATERIAL DESCRIPTION	USCS Classification	SPT Blows per 6-inch (SS) Texas Cone (TC)	Moisture, %	STANDARD PENETRATION TEST DATA N in blows/ft ◎ × Moisture ◪ PL ✚ LL (0 25 50) STRENGTH, tsf ▲ Qu ✳ Qp (0 2.0 4.0)	Additional Remarks
	0			1		**Fat CLAY**, stiff, dark grayish-brown to grayish-brown, fine roots, ferrous nodules to 1'			25		
				2			CH	2/2/3 N=5	22		LL = 54 PL = 19 Fines=86.7%
				3		**Lean CLAY**, very stiff, reddish-brown, brown mottling, calcareous inclusions, ferrous nodules at 3'		3/6/10 N=16	18		
95	5			4				4/6/13 N=19	18		
				5		**Shaley CLAY**, hard, red, calcareous inclusions		8/13/23 N=36	15		
90	10			6		**SHALE**, highly weathered to 20', moderately hard to very hard, red with gray, siltstone layers interbedded throughout		15 50 (5.00")	12		
85	15			7				50 (5.50") 50 (2.75")			
80	20			8				50 (0.75") 50 (0.38")			
75	25			9		End of boring		50 (0.75") 50 (0.13")			

intertek psi

Professional Service Industries, Inc.
11825 S. Portland Avenue
Oklahoma City, OK 73170
Telephone: (405) 735-6052

PROJECT NO.: 05462142-4
PROJECT: Highland West Junior High School Addition
LOCATION: Moore, OK

The stratification lines represent approximate boundaries. The transition may be gradual.

BORING DB-2

DATE STARTED:	3/25/20	**DRILL COMPANY:**	DSO
DATE COMPLETED:	3/25/20	**DRILLER:** T. Simpson	**LOGGED BY:** B. Long
COMPLETION DEPTH	25.0 ft	**DRILL RIG:**	ATV
BENCHMARK:	N/A	**DRILLING METHOD:**	Soild Flight Auger
ELEVATION:	100 ft	**SAMPLING METHOD:**	SS/TC
LATITUDE:	35.34437°	**HAMMER TYPE:**	Automatic
LONGITUDE:	-97.5125°	**EFFICIENCY**	N/A
STATION: N/A	**OFFSET:** N/A	**REVIEWED BY:**	A. Oyesanya

REMARKS:

Water		
While Drilling	None observed	
Upon Completion	None observed	
Delay	N/A	

BORING LOCATION:

Elevation (feet)	Depth, (feet)	Graphic Log	Sample Type	Sample No.	Recovery (inches)	MATERIAL DESCRIPTION	USCS Classification	SPT Blows per 6-inch (SS) Texas Cone (TC)	Moisture, %	STANDARD PENETRATION TEST DATA N in blows/ft ◎ × Moisture ◪ PL ✚ LL (0 25 50) STRENGTH, tsf ▲ Qu ✳ Qp (0 2.0 4.0)	Additional Remarks
	0			1		**Fat CLAY**, very stiff, brown with red, fine roots, ferrous nodules at 1', possible fill			24		
				2				3/7/8 N=15	18		
				3		**Lean CLAY**, stiff to very stiff, reddish-brown, possible fill to 4.5'		4/5/7 N=12	24		LL = 35 PL = 16 Fines=91.4%
95	5			4		...light gray inclusions	CL	4/7/11 N=18	18		
				5		...becomes shaley clay		13/27	12	>>◎	
						SHALE, moderately hard to hard, red with gray, siltstone layers interbedded throughout		50 (6.00")			
90	10			6				50 (1.50") 50 (1.25")		>>◎	
85	15			7				50 (2.00") 50 (0.75")		>>◎	
80	20			8				50 (1.00") 50 (0.50")		>>◎	
75	25			9		End of boring		50 (0.75") 50 (0.38")		>>◎	

intertek psi

Professional Service Industries, Inc.
11825 S. Portland Avenue
Oklahoma City, OK 73170
Telephone: (405) 735-6052

PROJECT NO.: 05462142-4
PROJECT: Highland West Junior High School Addition
LOCATION: Moore, OK

The stratification lines represent approximate boundaries. The transition may be gradual.

BORING DB-3

DATE STARTED:	3/25/20	**DRILL COMPANY:**	DSO
DATE COMPLETED:	3/25/20	**DRILLER:** T. Simpson	**LOGGED BY:** B. Long
COMPLETION DEPTH	25.0 ft	**DRILL RIG:**	ATV
BENCHMARK:	N/A	**DRILLING METHOD:**	Soild Flight Auger
ELEVATION:	100 ft	**SAMPLING METHOD:**	SS/TC
LATITUDE:	35.34448°	**HAMMER TYPE:**	Automatic
LONGITUDE:	-97.51295°	**EFFICIENCY**	N/A
STATION: N/A	**OFFSET:** N/A	**REVIEWED BY:**	A. Oyesanya

REMARKS:

Water		
	While Drilling	15 Ft.
	Upon Completion	22 Ft.
	Delay	N/A

BORING LOCATION:

Elevation (feet)	Depth, (feet)	Sample No.	Recovery (inches)	MATERIAL DESCRIPTION	USCS Classification	SPT Blows per 6-inch (SS) Texas Cone (TC)	Moisture, %
	0	1		**Fat CLAY**, stiff, grayish-brown with red, fine roots, possible fill			27
		2				3/4/7 N=11	23
		3		**Lean CLAY**, stiff to very stiff, grayish-brown with brown, fine roots to 4.5', possible fill		7/12/14 N=26	16
95	5	4			CL	5/5/5 N=10	20
		5		**Lean CLAY with Sand**, medium stiff to very stiff, red, light brown inclusions, calcareous inclusions		3/3/3 N=6	21
90	10	6				3/5/8 N=13	16
				SHALE, hard, red with gray, siltstone layers interbedded throughout			
85	15	7				50 (4.00")	11
80	20	8				50 (2.25") 50 (1.00")	
75	25	9		End of boring		50 (1.25") 50 (0.75")	

STANDARD PENETRATION TEST DATA
N in blows/ft ◎
× Moisture ◪ PL ✚ LL
0 25 50
STRENGTH, tsf
▲ Qu ✳ Qp
0 2.0 4.0

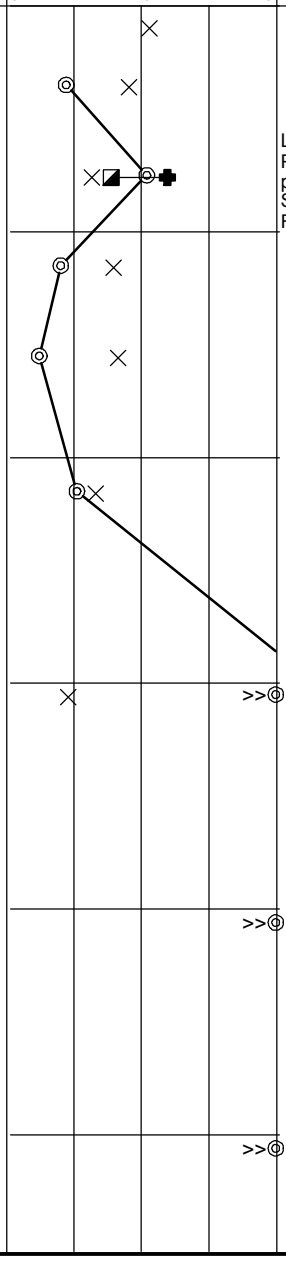

Additional Remarks

LL = 30
PL = 19
pH = 7.8
SO_4 = 360.0 mg/Kg
Fines=86.0%

intertek psi

Professional Service Industries, Inc.
11825 S. Portland Avenue
Oklahoma City, OK 73170
Telephone: (405) 735-6052

PROJECT NO.: 05462142-4
PROJECT: Highland West Junior High School Addition
LOCATION: Moore, OK

The stratification lines represent approximate boundaries. The transition may be gradual.

BORING DB-4

DATE STARTED:	3/25/20	**DRILL COMPANY:**	DSO
DATE COMPLETED:	3/25/20	**DRILLER:** T. Simpson	**LOGGED BY:** B. Long
COMPLETION DEPTH	25.0 ft	**DRILL RIG:**	ATV
BENCHMARK:	N/A	**DRILLING METHOD:**	Soild Flight Auger
ELEVATION:	100 ft	**SAMPLING METHOD:**	SS/TC
LATITUDE:	35.34438°	**HAMMER TYPE:**	Automatic
LONGITUDE:	-97.51332°	**EFFICIENCY**	N/A
STATION: N/A	**OFFSET:** N/A	**REVIEWED BY:**	A. Oyesanya

REMARKS:

Water		
	While Drilling	15 Ft.
	Upon Completion	20 Ft.
	Delay	N/A

BORING LOCATION:

Elevation (feet)	Depth, (feet)	Graphic Log	Sample Type	Sample No.	Recovery (inches)	MATERIAL DESCRIPTION	USCS Classification	SPT Blows per 6-inch (SS) Texas Cone (TC)	Moisture, %	STANDARD PENETRATION TEST DATA N in blows/ft ◎ × Moisture ◪ PL ✚ LL (0 25 50) STRENGTH, tsf ▲ Qu ✳ Qp (0 2.0 4.0)	Additional Remarks
	0			1		**Lean CLAY**, very stiff, dark brown, fine roots, possible fill			24		
				2				4/7/12 N=19	14		
				3		**Lean CLAY**, stiff to very stiff, brown with orange to dark brown mixed with brown and rust, ferrous nodules, fine roots, possible fill		10/10/10 N=20	21		LL = 44 PL = 17 Fines=87.6%
95	5			4			CL	3/4/6 N=10	16		
				5		**Lean CLAY**, stiff, red with light gray		5/5/5 N=10	18		
90	10			6		...becomes shaley clay		10/21	9	>>◎	
						SHALE, moderately hard to very hard, red with light gray, siltstone layers interbedded throughout		50 (5.50")			
85	15			7				50 (1.13") 50 (0.63")		>>◎	
80	20			8				50 (0.75") 50 (0.38")		>>◎	
75	25			9		End of boring		50 (0.75") 50 (0.13")		>>◎	

intertek psi

Professional Service Industries, Inc.
11825 S. Portland Avenue
Oklahoma City, OK 73170
Telephone: (405) 735-6052

PROJECT NO.: 05462142-4
PROJECT: Highland West Junior High School Addition
LOCATION: Moore, OK

The stratification lines represent approximate boundaries. The transition may be gradual.

Profile

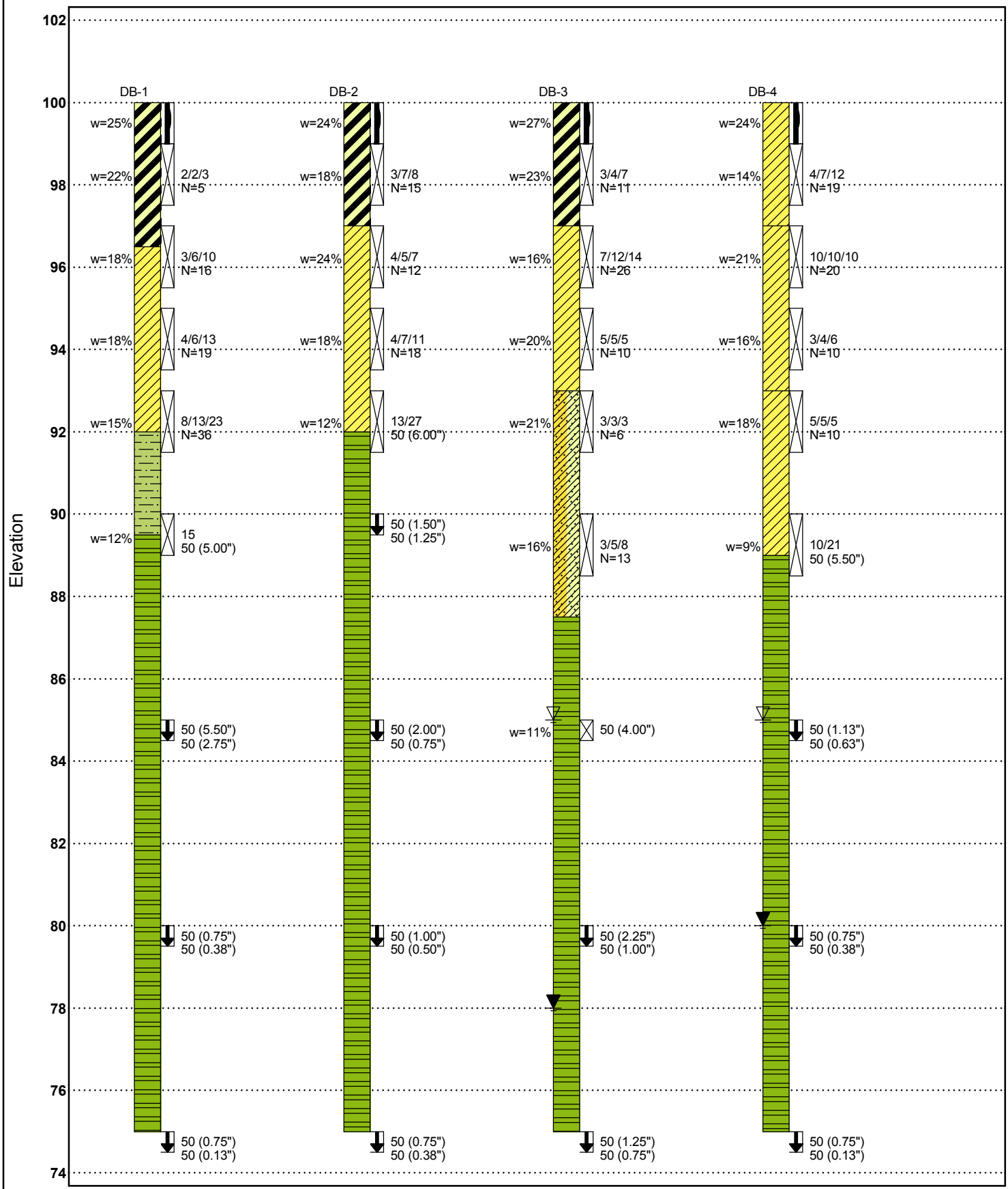

Distance Along Baseline

Professional Service Industries, Inc.
11825 S. Portland Avenue
Oklahoma City, OK 73170
Telephone: (405) 735-6052

Highland West Junior High School Addition
PSI Project Number: 05462142-4

APPENDIX B – LABORATORY TEST REPORTS

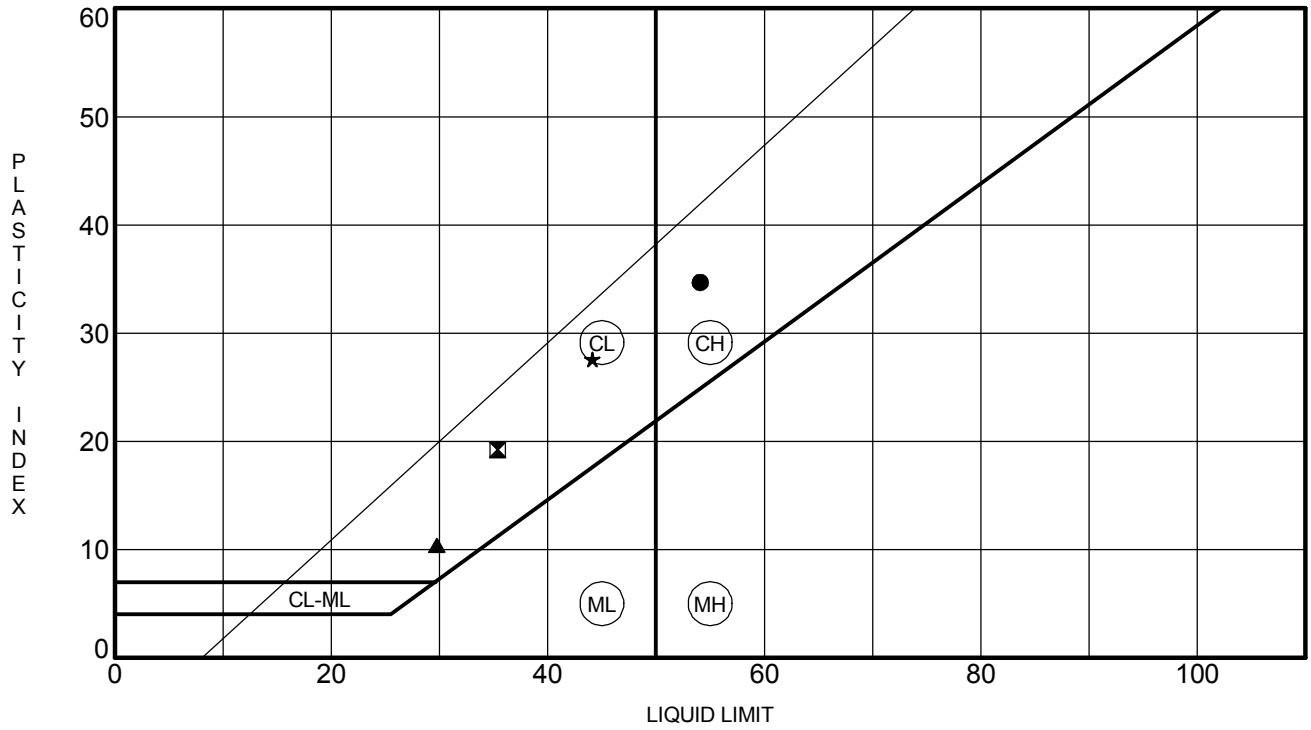

	Boring	Depth (ft)	LL	PL	PI	Fines	Classification (*Visual)
●	DB-1	1.8	54	19	35	86.7	Fat CLAY
⊠	DB-2	3.8	35	16	19	91.4	Lean CLAY
▲	DB-3	3.8	30	19	11	86.0	Lean CLAY
★	DB-4	3.8	44	17	27	87.6	Lean CLAY

intertek psi
Professional Service Industries, Inc.
11825 S. Portland Avenue
Oklahoma City, OK 73170
Telephone: (405) 735-6052
Fax: (405) 735-6086

ATTERBERG LIMIT RESULTS

PSI Job No.: 05462142-4
Project: Highland West Junior High School Addition
Location: Moore, OK

APPENDIX C – GENERAL NOTES

GENERAL NOTES

SAMPLE IDENTIFICATION

The Unified Soil Classification System (USCS), AASHTO 1988 and ASTM designations D2487 and D-2488 are used to identify the encountered materials unless otherwise noted. Coarse-grained soils are defined as having more than 50% of their dry weight retained on a #200 sieve (0.075mm); they are described as: boulders, cobbles, gravel or sand. Fine-grained soils have less than 50% of their dry weight retained on a #200 sieve; they are defined as silts or clay depending on their Atterberg Limit attributes. Major constituents may be added as modifiers and minor constituents may be added according to the relative proportions based on grain size.

DRILLING AND SAMPLING SYMBOLS

SFA: Solid Flight Auger - typically 4" diameter flights, except where noted.
HSA: Hollow Stem Auger - typically 3¼" or 4¼ I.D. openings, except where noted.
M.R.: Mud Rotary - Uses a rotary head with Bentonite or Polymer Slurry
R.C.: Diamond Bit Core Sampler
H.A.: Hand Auger
P.A.: Power Auger - Handheld motorized auger

SS: Split-Spoon - 1 3/8" I.D., 2" O.D., except where noted.
ST: Shelby Tube - 3" O.D., except where noted.
RC: Rock Core
TC: Texas Cone
BS: Bulk Sample
PM: Pressuremeter
CPT-U: Cone Penetrometer Testing with Pore-Pressure Readings

SOIL PROPERTY SYMBOLS

N: Standard "N" penetration: Blows per foot of a 140 pound hammer falling 30 inches on a 2-inch O.D. Split-Spoon.
N_{60}: A "N" penetration value corrected to an equivalent 60% hammer energy transfer efficiency (ETR)
Q_u: Unconfined compressive strength, TSF
Q_p: Pocket penetrometer value, unconfined compressive strength, TSF
w%: Moisture/water content, %
LL: Liquid Limit, %
PL: Plastic Limit, %
PI: Plasticity Index = (LL-PL),%
DD: Dry unit weight, pcf
▼,▽,▼ Apparent groundwater level at time noted

RELATIVE DENSITY OF COARSE-GRAINED SOILS

Relative Density	N - Blows/foot
Very Loose	0 - 3
Loose	4 - 9
Medium Dense	10 - 29
Dense	30 - 49
Very Dense	50+

ANGULARITY OF COARSE-GRAINED PARTICLES

Description	Criteria
Angular:	Particles have sharp edges and relatively plane sides with unpolished surfaces
Subangular:	Particles are similar to angular description, but have rounded edges
Subrounded:	Particles have nearly plane sides, but have well-rounded corners and edges
Rounded:	Particles have smoothly curved sides and no edges

GRAIN-SIZE TERMINOLOGY

Component	Size Range
Boulders:	Over 300 mm (>12 in.)
Cobbles:	75 mm to 300 mm (3 in. to 12 in.)
Coarse-Grained Gravel:	19 mm to 75 mm (¾ in. to 3 in.)
Fine-Grained Gravel:	4.75 mm to 19 mm (No.4 to ¾ in.)
Coarse-Grained Sand:	2 mm to 4.75 mm (No.10 to No.4)
Medium-Grained Sand:	0.42 mm to 2 mm (No.40 to No.10)
Fine-Grained Sand:	0.075 mm to 0.42 mm (No. 200 to No.40)
Silt:	0.005 mm to 0.075 mm
Clay:	<0.005 mm

PARTICLE SHAPE

Description	Criteria
Flat:	Particles with width/thickness ratio > 3
Elongated:	Particles with length/width ratio > 3
Flat & Elongated:	Particles meet criteria for both flat and elongated

RELATIVE PROPORTIONS OF FINES

Descriptive Term	% Dry Weight
Trace:	< 5%
With:	5% to 12%
Modifier:	>12%

GENERAL NOTES

(Continued)

CONSISTENCY OF FINE-GRAINED SOILS

Q_U - TSF	N - Blows/foot	Consistency
0 - 0.25	0 - 1	Very Soft
0.25 - 0.50	2 - 3	Soft
0.50 - 1.00	4 - 6	Medium Stiff
1.00 - 2.00	7 - 12	Stiff
2.00 - 4.00	13 - 26	Very Stiff
4.00 +	26+	Hard

MOISTURE CONDITION DESCRIPTION

Description	Criteria
Dry:	Absence of moisture, dusty, dry to the touch
Moist:	Damp but no visible water
Wet:	Visible free water, usually soil is below water table

RELATIVE PROPORTIONS OF SAND AND GRAVEL

Descriptive Term	% Dry Weight
Trace:	< 15%
With:	15% to 30%
Modifier:	>30%

STRUCTURE DESCRIPTION

Description	Criteria
Stratified:	Alternating layers of varying material or color with layers at least ¼-inch (6 mm) thick
Laminated:	Alternating layers of varying material or color with layers less than ¼-inch (6 mm) thick
Fissured:	Breaks along definite planes of fracture with little resistance to fracturing
Slickensided:	Fracture planes appear polished or glossy, sometimes striated
Blocky:	Cohesive soil that can be broken down into small angular lumps which resist further breakdown
Lensed:	Inclusion of small pockets of different soils
Layer:	Inclusion greater than 3 inches thick (75 mm)
Seam:	Inclusion 1/8-inch to 3 inches (3 to 75 mm) thick extending through the sample
Parting:	Inclusion less than 1/8-inch (3 mm) thick

SCALE OF RELATIVE ROCK HARDNESS

Q_U - TSF	Consistency
2.5 - 10	Extremely Soft
10 - 50	Very Soft
50 - 250	Soft
250 - 525	Medium Hard
525 - 1,050	Moderately Hard
1,050 - 2,600	Hard
>2,600	Very Hard

ROCK BEDDING THICKNESSES

Description	Criteria
Very Thick Bedded	Greater than 3-foot (>1.0 m)
Thick Bedded	1-foot to 3-foot (0.3 m to 1.0 m)
Medium Bedded	4-inch to 1-foot (0.1 m to 0.3 m)
Thin Bedded	1¼-inch to 4-inch (30 mm to 100 mm)
Very Thin Bedded	½-inch to 1¼-inch (10 mm to 30 mm)
Thickly Laminated	1/8-inch to ½-inch (3 mm to 10 mm)
Thinly Laminated	1/8-inch or less "paper thin" (<3 mm)

ROCK VOIDS

Voids	Void Diameter
Pit	<6 mm (<0.25 in)
Vug	6 mm to 50 mm (0.25 in to 2 in)
Cavity	50 mm to 600 mm (2 in to 24 in)
Cave	>600 mm (>24 in)

GRAIN-SIZED TERMINOLOGY

(Typically Sedimentary Rock)

Component	Size Range
Very Coarse Grained	>4.76 mm
Coarse Grained	2.0 mm - 4.76 mm
Medium Grained	0.42 mm - 2.0 mm
Fine Grained	0.075 mm - 0.42 mm
Very Fine Grained	<0.075 mm

ROCK QUALITY DESCRIPTION

Rock Mass Description	RQD Value
Excellent	90 -100
Good	75 - 90
Fair	50 - 75
Poor	25 -50
Very Poor	Less than 25

DEGREE OF WEATHERING

Slightly Weathered:	Rock generally fresh, joints stained and discoloration extends into rock up to 25 mm (1 in), open joints may contain clay, core rings under hammer impact.
Weathered:	Rock mass is decomposed 50% or less, significant portions of the rock show discoloration and weathering effects, cores cannot be broken by hand or scraped by knife.
Highly Weathered:	Rock mass is more than 50% decomposed, complete discoloration of rock fabric, core may be extremely broken and gives clunk sound when struck by hammer, may be shaved with a knife.

SOIL CLASSIFICATION CHART

NOTE: DUAL SYMBOLS ARE USED TO INDICATE BORDERLINE SOIL CLASSIFICATIONS

MAJOR DIVISIONS			SYMBOLS GRAPH	SYMBOLS LETTER	TYPICAL DESCRIPTIONS
COARSE GRAINED SOILS MORE THAN 50% OF MATERIAL IS LARGER THAN NO. 200 SIEVE SIZE	GRAVEL AND GRAVELLY SOILS MORE THAN 50% OF COARSE FRACTION RETAINED ON NO. 4 SIEVE	CLEAN GRAVELS (LITTLE OR NO FINES)		GW	WELL-GRADED GRAVELS, GRAVEL - SAND MIXTURES, LITTLE OR NO FINES
			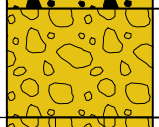	GP	POORLY-GRADED GRAVELS, GRAVEL - SAND MIXTURES, LITTLE OR NO FINES
		GRAVELS WITH FINES (APPRECIABLE AMOUNT OF FINES)	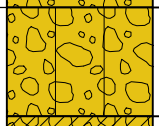	GM	SILTY GRAVELS, GRAVEL - SAND - SILT MIXTURES
			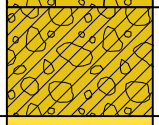	GC	CLAYEY GRAVELS, GRAVEL - SAND - CLAY MIXTURES
	SAND AND SANDY SOILS MORE THAN 50% OF COARSE FRACTION PASSING ON NO. 4 SIEVE	CLEAN SANDS (LITTLE OR NO FINES)		SW	WELL-GRADED SANDS, GRAVELLY SANDS, LITTLE OR NO FINES
			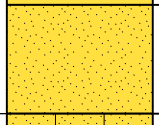	SP	POORLY-GRADED SANDS, GRAVELLY SAND, LITTLE OR NO FINES
		SANDS WITH FINES (APPRECIABLE AMOUNT OF FINES)	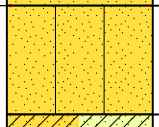	SM	SILTY SANDS, SAND - SILT MIXTURES
			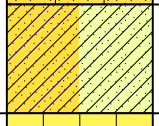	SC	CLAYEY SANDS, SAND - CLAY MIXTURES
FINE GRAINED SOILS MORE THAN 50% OF MATERIAL IS SMALLER THAN NO. 200 SIEVE SIZE	SILTS AND CLAYS	LIQUID LIMIT LESS THAN 50	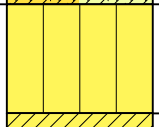	ML	INORGANIC SILTS AND VERY FINE SANDS, ROCK FLOUR, SILTY OR CLAYEY FINE SANDS OR CLAYEY SILTS WITH SLIGHT PLASTICITY
			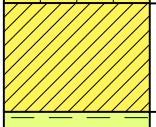	CL	INORGANIC CLAYS OF LOW TO MEDIUM PLASTICITY, GRAVELLY CLAYS, SANDY CLAYS, SILTY CLAYS, LEAN CLAYS
			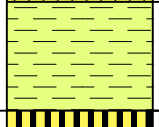	OL	ORGANIC SILTS AND ORGANIC SILTY CLAYS OF LOW PLASTICITY
	SILTS AND CLAYS	LIQUID LIMIT GREATER THAN 50		MH	INORGANIC SILTS, MICACEOUS OR DIATOMACEOUS FINE SAND OR SILTY SOILS
			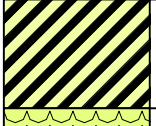	CH	INORGANIC CLAYS OF HIGH PLASTICITY
			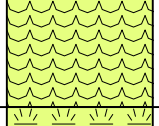	OH	ORGANIC CLAYS OF MEDIUM TO HIGH PLASTICITY, ORGANIC SILTS
HIGHLY ORGANIC SOILS				PT	PEAT, HUMUS, SWAMP SOILS WITH HIGH ORGANIC CONTENTS

intertek psi

Graphic Symbols for Materials and Rock Deposits

CONCRETE
Portland Cement Concrete

BITUMINOUS CONCRETE

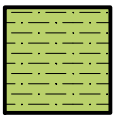

CLAYSTONE

COAL
Coal, Anthracite Coal

CONGLOMERATE/BRECCIA
Conglomerate, Breccia

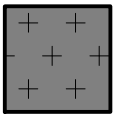

IGNEOUS ROCK
Anorthsite, Basalt, Metabasalt, Diabase (Gabbro), Gabbro, Granite/Granodionite, Homfels, Pegmatite, Rhyolite/Metarhyolite

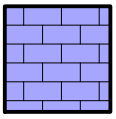

LIMESTONE
Limestone, Dolomite

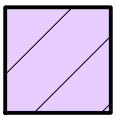

METAMORPHIC ROCK
Amphibolite, Gneiss, Marble, Phyllite, Quartzite, Schist, Serpentinite, Slate

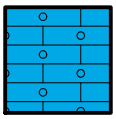

CHERT

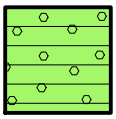

SANDSTONE
Sandstone, Orthoquarzite (Sandstone)

SHALE

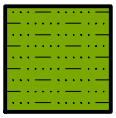

SILTSTONE

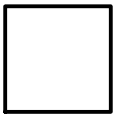

NO RECOVERY

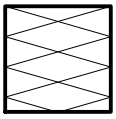

VOID

intertek
psi

DIVISION 1 - GENERAL REQUIREMENTS

SECTION 01010-SUMMARY OF THE WORK

Part 1 - General

1.01 Work Included:

A. The General Conditions, Bidding Requirements, and Division I are hereby made a part of each of the technical sections that follow, and shall be understood to apply and shall apply in full to all individuals or corporations who contract or subcontract to perform any part or all of the project work.

B. Indications on the working drawings or in any section of the specifications of an article or material, operation, or method, requires that the Contractor shall provide each item or service or quality or is subject to qualifications noted; and, the Contractor shall perform each operation prescribed according to the conditions stated providing, therefore, all necessary labor, equipment and incidentals to complete the project work.

C. The project:

1. Name: Highland West Junior High School STEM Addition - Moore Public Schools.
2. Location: 901 N. Santa Fe – Moore, Oklahoma.

1.02 Summary of Work:

A. **Base Bid:** Provide and pay for all materials, labor, services, equipment, licenses, taxes, permits, and other items necessary for the complete construction of an (approximately) 20,865 s.f. new STEM classroom addition including new sidewalks, and site utilities. Contractor shall maintain all barriers, guards and other environmental items required at the site during construction.

B. Owner: Moore Public Schools

1. Owner's Representative:
   Jeff Horn, Assistant Superintendent, Operations
   Moore Public Schools
   1500 SE 4th Street
   Moore, OK 73160
   405-735-4221

C. Design Team:

1. Architect:
   Mike Abla, Principal Architect
   AGP
   201 N. Broadway, Suite 210
   Moore, OK 73160
   405-735-3477
2. Structural Engineer:
   Brandon Birch, Structural Engineer
   KFC Engineering, Inc.
   205 NW 63rd, Suite 390
   Oklahoma City, OK 73116

3. Mechanical, Electrical and Plumbing Engineers:
   Dwayne Gordon, Mechanical Engineer
   Salas O'Brien LLC
   2600 Van Buren St., Suite 2604
   Norman, OK 73072
   405-364-9926
4. Civil Engineer:
   Derek Harris, Engineering Intern
   Cedar Creek
   P.O. Box 14534
   Oklahoma City, OK 73113
   405-863-8984
4. Construction Manager:
   Joe Sherga, Project Manager
   Omni Construction LLC
   1909 S. Eastern Ave.
   Moore, OK 73160
   405-735-3992

1.04 Work to be Provided and Installed By Others:
Not applicable.

1.05 Use of the Site:
A. Confine operations at the site to the areas permitted under the contract. Portions of the site beyond areas on which work is indicated are not to be disturbed.
B. Keep facility free from accumulation of waste material, rubbish or construction debris.

1.06 Safety of Persons and property:
A. Contractor shall at all times protect the building from damage from rainwater.
B. Contractor shall provide barricades and clearly mark work zone areas.
C. Refer to Special Conditions "Temporary Services" for additional information.
D. During the period of construction, the OSHA Standards shall be followed as applicable by law.
E. The Contractor shall post emergency telephone numbers.

1.07 Preconstruction Conference:
A. A preconstruction meeting will be held at a time and place designated by the Architect or Owner's Representative, for the purpose of identifying responsibilities of the Owner's and the Architect's personnel and explanation of administrative procedures.
B. The Contractor shall use this meeting for the following minimum agenda:
   1. Construction Schedule/Project Phasing.
   2. Use of areas of the site.
   3. Delivery and storage.
   4. Safety.
   5. Security.
   6. Cleaning up.
   7. Subcontractor procedures relating to:
      a. Submittals.

b. Change orders.
c. Applications for payment.
d. Record documents.

C. The attendees shall include:
1. The Owner's Representatives.
2. The Architect.
3. The Contractor and its superintendent.

1.08 Project Scheduling:

A. The Contractor is responsible for the scheduling of construction and must prepare a schedule and charting system described below. This schedule is to ensure adequate planning and execution of the work by the contractor and to assist the Architect in appraising the schedule and evaluating the progress of the work.

B. The project schedule shall be presented within ten (10) days after receipt of the Notice to Proceed. Electronic copies of the schedule shall be submitted to the Architect for review and approval.

C. The schedule logic must be in the form of a "fenced" bar chart or Critical Path Method network indicating the planned start and completion dates of the activity, logical constraints between activities, and total float of each activity.

D. An updated project schedule shall be provided when requested by the Architect.

1.09 Environmental Controls:

A. Water Resources:
1. Oily substances: prevent oily or other hazardous substances from entering the ground, drainage areas, or local bodies of water.
2. Mosquito abatement: prevent ponding of stagnant water conducive to mosquito breeding habitat.

B. Land Resources:
1. Erodible soils: plan and conduct earthwork to minimize the duration of exposure of unprotected soils. Clear areas in reasonably sized increments only as needed to use the areas developed. Immediately protect side slopes and back slopes upon completion of rough grading.

C. Air resources:
1. Prevent creation of dust, air pollution, and odors.
2. Use water sprinkling, temporary enclosures, and other appropriate methods to limit dust and dirt rising and scattering in air to locate practical level.
3. Store volatile liquids, including fuels and solvents, in closed containers.
4. Properly maintain equipment to reduce gaseous pollutant emissions.

D. Comply with all applicable environmental control guidelines as required by the City of Moore.

1.10 Temporary Utilities:

A. The Contractor shall provide and pay for all temporary utilities required for the complete construction of the project including, but not limited to, electricity, lighting, heating,

cooling, ventilating, telephone, water, sanitary facilities, exterior and interior enclosures, access roads and parking areas, cleaning and waste removal, project identification and signs, etc.

1.11 Cleaning:

A. Use cleaning materials and agents recommended by manufacturer or fabricator of surface to be cleaned. Do not use cleaning agents that are potentially hazardous to health or property, or that might damage finished surfaces.

B. Employ experienced workers or professional cleaners for final cleaning. Clean each surface or unit of work to condition expected from a commercial building cleaning and maintenance program. Comply with manufacturer's published instructions.

C. Complete cleaning operations prior to requesting a Final / Substantial Completion Inspection.

1.12 Project Sign:

A. Provide and install painted plywood project sign on wooden posts securely erected at the project site in a location approved by the Owner.

B. No other project signs or advertisement shall be allowed at the project site unless approved by the Owner.

C. Graphics and form of letter of the project sign shall be as indicated in the attached detail.

End of Section

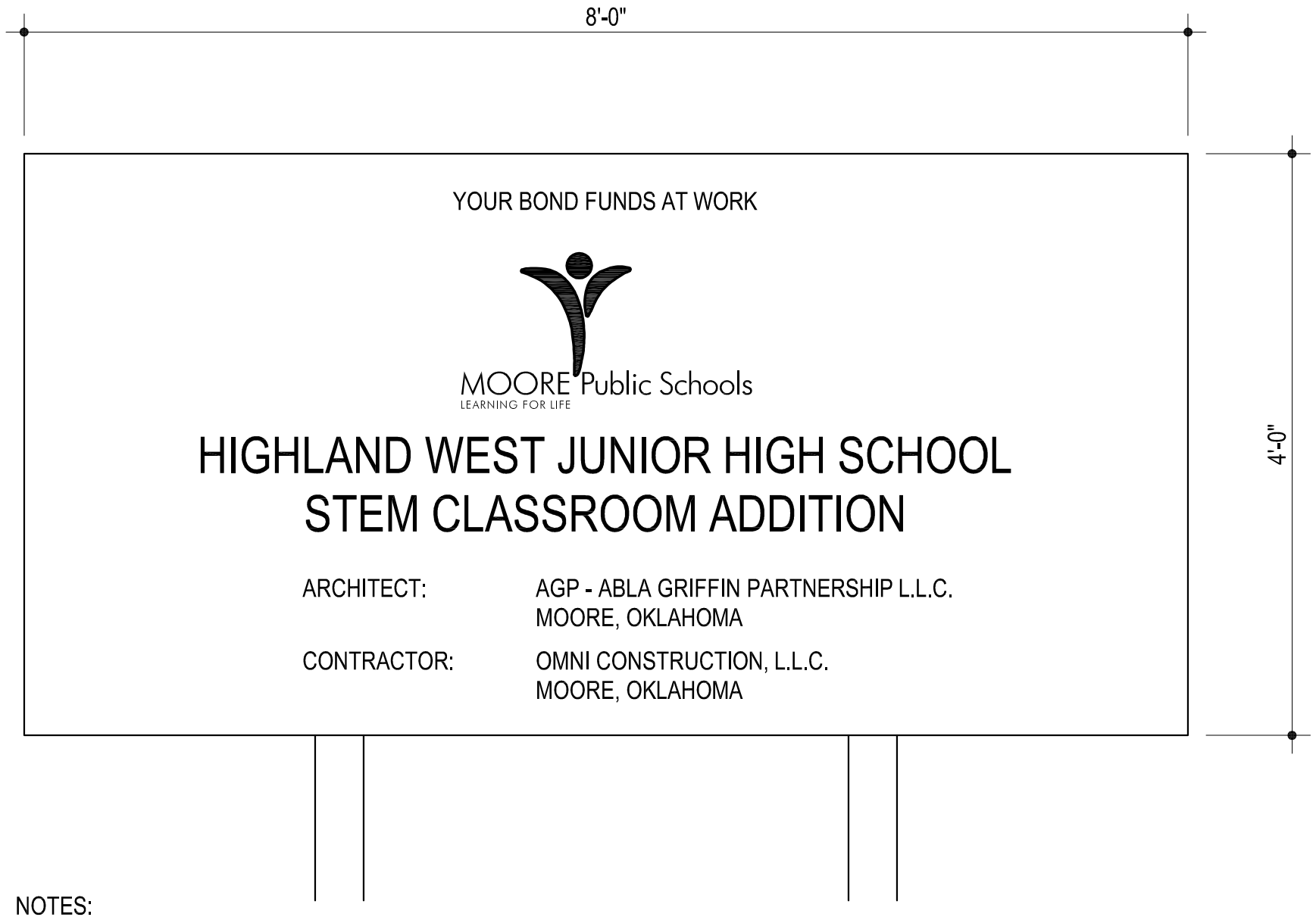

NOTES:

1. WHITE LETTERS ON DARK BLUE BACKGROUND
2. 3/4" EXTERIOR PLYWOOD - PAINTED ALL SIDES
3. MOUNT ON 4" X 4" WOOD POST
4. CONTRACTOR TO HAVE LAYOUT APPROVED PRIOR TO INSTALLATION

This SWP3 was prepared prior to an assigned General Contractor. General Contractor is responsible for reading and reviewing this SWP3 in its entirety. All highlighted areas will need to be completed prior to construction.

Stormwater Pollution Prevention Plan (SWP3)

Authorization No. OKR10

For Construction Activities At:

Highland West Jr High
901 N Santa Fe Ave
Moore, OK 73160

SWP3 Prepared For:

OMNI Construction
PO Box 892245
Oklahoma City, OK 73189

SWP3 Prepared By:

Cedar Creek Consulting, Inc
PO Box 14534
Oklahoma City, OK 73113
405.778.3385
Cedarcreekinc.com

SWP3 Preparation Date:

08/09/23

Estimated Project Dates:

Project Start Date: 09/01/23

Project Completion Date: 09/01/24

This Page is Intentionally Left Blank

Table of Contents

Section 1: Stormwater Team and Project/Site Information 1-3

1.1 Stormwater Team 1-3

1.2 Nature of Construction Activity and Project Information 1-4

1.3 Operators and Contactor's Contact Information 1-6

1.4 Construction Support Activities (*if applicable*) 1-7

1.5 Sequence of Construction Activities 1-8

1.6 Allowable Non-Stormwater Discharges 1-9

Section 2: Site Description and Site Map 2-1

2.1 Receiving Waters/Discharge Information 2-1

2.2 General Location Map 2-2

2.3 Site Map 2-2

Section 3: Construction Site Pollutants 3-1

3.1 Pollutant-Generating Activities 3-1

3.2 List of Potential Pollutants 3-1

Section 4: Compliance with Federal and State Requirements 4-1

4.1 Endangered or Threatened Species Protection 4-1

4.2 Federal, State, or Local Historic Preservation Laws 4-2

4.3 TMDL Requirements 4-2

Section 5: Stormwater Control Measures 5-1

5.1 Stabilization Practices 5-1

5.2 Natural Buffers and/or Equivalent Sediment Controls 5-2

5.3 Structural Controls/Best Management Practices (BMPs) 5-4

5.3.1 Perimeter Control 5-5

5.3.2 Sediment Track-Out 5-5

5.3.3 Stockpiled Sediment or Soil 5-6

5.3.4 Minimize Dust 5-6

5.3.5 Minimize the Disturbance of Steep Slopes 5-6

5.3.6 Preserve Topsoil 5-7

5.3.7 Minimize Soil Compaction 5-7

5.3.8 Protection of Storm Drain Inlets 5-7

5.3.9 Constructed Stormwater Conveyance Channels 5-8

5.3.10 Sediment Basins 5-8

5.3.11 Dewatering Practices 5-9

5.3.12 Other Stormwater Controls 5-9

Section 6: Pollution Prevention Controls 6-1

6.1 Spill Prevention and Responses 6-1

6.2 Waste Management Procedures 6-1

6.3 Prohibited Discharges 6-3

Section 7: Procedures and Documentations 7-1

7.1 Maintenance and Repair 7-1

7.2 Approval from Local Office 7-1

7.3 Inspections 7-2

7.4 Corrective Action 7-3

7.5 Employee Training 7-4

7.6 Notification of Change of Ownership (NCO) for Individual Lots 7-4

7.7 Sub-contractor Certifications 7-4

7.8 Record Keeping and Record Retention 7-5

7.9 Posting a Notice 7-5

Section 8: Additional Monitoring (if applicable) 8-1

8.1 Support Activity Covered by this Plan 8-1

8.2 Representative Outfall(s) 8-1

8.3 Structural & Non-Structural BMPs 8-1

8.4 Quarterly Visual Monitoring 8-1

8.5 Comprehensive Site Compliance Evaluation 8-1

8.6 Numeric Effluent Limitation Monitoring for Asphalt Plant 8-2

8.7 Additional Procedures for Concrete Batch Plant 8-3

Section 9: SWP3 Certification 9-1

Section 10: SWP3 Modifications 10-1

Section 11: SWP3 Attachments & Additional Documentation 11-1

Section 1: Stormwater Team and Project/Site Information

1.1 Stormwater Team

Stormwater team is responsible for overseeing development of the SWP3, making any modifications to it, implementing and maintaining control measures, taking corrective actions when required, performing site inspection and monitoring, supervising pollution prevention and waste management activities, providing staff training, and communicating changes in the SWP3 to the people working on the site. The following personnel, along with their role and responsibility, will be part of the **stormwater team** for my construction site:

Team Leader (Name/Title/Telephone)	**Roles & Responsibilities**
	Supervision & implantation of housekeeping program Providing Staff Training Routine Facility Inspection

Team Member # 1 (Name/Title/Telephone)	**Roles & Responsibilities**
	Maintenance of different structural BMPs Documenting changes to SWP3 Corrective Action Report

Team Member # 2 (Name/Title/Telephone)	**Roles & Responsibilities**
	Communicating the changes in SWP3 to people working on site. Development & amendment of SWP3

Team Member # 3 (Name/Title/Telephone)	**Roles & Responsibilities**
	Installation of different types of structural BMPs/stormwater controls

Team Member # 4 (Name/Title/Telephone)	**Roles & Responsibilities**

1.2 Nature of Construction Activity and Project Information

Project/Site Name and Address			
Project/Site Name: Highland West Jr High			
Project/Site Street/Location: 901 N Santa Fe Ave			
City: Moore		**County**: Cleveland	
State:	OK	**ZIP Code**:	73160

General Description of the Project/Site: Construction of building with supporting pavement, drainage, and utility facilities

Estimated project start date: 09/01/23	
Estimated project end date: 09/01/24	
Total area of the construction site:	**1.80(acres)**
Estimated area to be disturbed:	**1.80(acres)**
Estimated current impervious area at the site:	**0.38(acres)**
Estimated impervious area after construction:	**.85(acres)**
Pre-construction runoff coefficient of the site: .4	
Post-construction runoff coefficient of the site: .68	
Purpose of the Construction Project/Site: ☐ Residential ☒ Commercial ☐ Wind Farm ☐ Road/Bridge ☐ Other(s), please specify: Click here to enter text.	

Project Latitude/Longitude (for linear project, include latitude/longitude of **start and end points)**	
Latitude:	**Longitude:**
1. 35°20'43.40"N (degrees, minutes, seconds)	1. 97°30'46.39"W (degrees, minutes, seconds)
2. _ _ . _ _ _ _ ° N (decimal)	2. _ _ . _ _ _ _ ° W (decimal)
Latitude:	**Longitude:**
1. _ _ ° _ _ ' _ _ . _ _ '' N (degrees, minutes, seconds)	1. _ _ ° _ _ ' _ _ . _ _ '' W (degrees, minutes, seconds)
2. _ _ . _ _ _ _ ° N (decimal)	2. _ _ . _ _ _ _ ° W (decimal)
Method for determining latitude/longitude:	
☐ DEQ Flex-viewer ☐ EPA Website	☐ USGS topographic map ☒ GPS

Description of soil type(s) and fill materials:
49-Kirkland-Urban land-Pawhuska Complex

Description of slopes (describe existing slopes and note any changes due to grading or fill activities):

0-3%

Description of drainage patterns (describe existing drainage patterns and note any changes dues to grading or fill activities):

The property drains away from buildings toward concrete trickle channel located at the southeast of site.

Description of existing or baseline vegetation on or immediately surrounding the project area:
Site is currently developed with buildings, structures, pavement and grasses

Climate/Rainfall Patterns - check the box that applies:

☐ (0-20" annual rainfall) ☐ (20" -30" annual rainfall)

☐ (30"-40" annual rainfall) ☒ (40" -50" annual rainfall)

(Note: Annual rainfall data can be found at the following link: https://www.mesonet.org/index.php/weather/category/rainfall)

1.3 Operators and Contactor's Contact Information

Operator(s) Information:		
Name: Omni Construction, LLC		
Address: PO Box 892245		
City: Oklahoma City	State: OK	Zip Code: 73189
Operator's Point of Contact: Joe Sherga		
Telephone Number: 405-735-3992		
Email address: jsherga@coxinet.net	Fax number: 405-622-5649	

Contractor's Information:		
Name:		
Address:		
City:	State:	Zip Code:
Telephone Number:		
Email address:	Fax number:	

(If owner is a separate entity)

Sub-Contractor's Information:		
Name:		
Address:		
City:	State:	Zip Code:
Telephone Number:		
Email address:	Fax number:	

SWP3 Contact(s):	
SWP3 Contact Name (Primary): Sheila Cruze	
Telephone number: 405.778.3385	
Email address: scruze@cedarcreekinc.com	Fax number:
SWP3 Contact Name (Backup): Andrew Wilson	
Telephone number: 405.778.3385	
Email address: awilson@cedarcreekinc.com	Fax number:

1.4 Construction Support Activities (*if applicable*)

List of construction support activities that will be available at the construction project/site:

Type of Construction Support Activities [1]	Will be Present at the Construction Site?
Equipment Staging Yards	☐ Yes ☒ No
Material Storage Areas	☐ Yes ☒ No
Excavated Material Disposal Areas	☐ Yes ☒ No
Borrow Areas	☐ Yes ☒ No
Concrete Batch Plant [2]	☐ Yes ☒ No
Asphalt Plant [2]	☐ Yes ☒ No

*(**Note-1: Locate** all the construction support activities on the site map. **Appropriate/additional** controls & measures are required for construction support activities. Support activities should not be located within the watershed of an Outstanding Resources Water (ORW).*

***Note-2:** Include **Section 8** if you have Concrete Batch Plant and/or Asphalt Plant as construction support activities at your construction site. Exclude/delete Section 8 if you don't have Concrete Batch Plant and/or Asphalt Plant at your construction site.)*

1.5 Sequence of Construction Activities

(Note: You may edit sequence of construction activities in the following table to reflect your project's sequences along with estimated start date and duration)

No.	Sequence of Construction Activities	Estimated Start Date	Duration (in Days)
	Phase I		
1.	A pre-construction meeting shall be held by the general contractor's manager and the operator's engineer prior to land disturbing activities.	**09/01/23**	**1**
2.	Prepare and pull all necessary permits.	**09/01/23**	**1**
3.	Construct temporary construction exits at locations shown on the SWPPP plans and prepare temporary parking and storage area. Upon implementation and installation of the following areas: trailer, parking, lay down, port-a-potty, wheel wash, concrete washout, masons area, fuel and material storage containers, solid waste containers, etc., denote them on the site maps immediately and note any changes in the locations as they occur throughout the construction process	**09/01/23**	**7**
4.	Construct the silt fences on the site	**09/01/23**	**7**
5.	Demo, clear and grub the site	**09/01/23**	**30**
6.	Install public water, sewer, and box culvert	**10/01/23**	**14**
7.	Begin grading the site	**09/01/23**	**14**
8.	Start Construction of Building Pad and Structures.	**10/16/23**	**14**
9.	Disturbed areas of the site where construction activity has ceased for more than 14 days shall be temporarily seeded and watered	**09/01/23**	**365**
	Phase II		
10.	Install utilities, underdrains, storm sewers, curb and gutters	**10/15/23**	**45**
11.	Install inlet protection devices	**10/15/23**	**45**
12.	Install rip rap around outlet structures	**09/15/23**	**45**
13.	Finalize pavement subgrade preparation	**11/01/23**	**7**

14.	Install base material as required for pavement	**11/09/23**	**7**
15.	Pave lot	**11/18/23**	**7**
16.	Remove temporary construction exits only prior to pavement construction in these areas (these areas are to be paved last)	**11/18/23**	**7**
17.	Disturbed areas of the site where construction activity has ceased for more than 14 days shall be temporarily seeded and watered	**09/01/23**	**365**
18.	Fine grade and install permanent seeding and plantings	**11/27/23**	**30**
19.	Remove all temporary erosion and sediment control devised (only if site is stabilized	**12/27/23**	**4**
20.	Remove inlet protections around inlets and manholes no more than 48 hours prior to placing stabilized base course.	**01/01/24**	**3**

1.6 Allowable Non-Stormwater Discharges

List of allowable non-stormwater discharges that will be present at the construction site:

No.	Type of Allowable Non-Stormwater Discharge	Likely to be Present at Construction Site?
1.	Fire hydrant flushing	☒ Yes ☐ No
2.	Waters used to wash vehicles and equipment	☐ Yes ☒ No
3.	Water used to control dust	☒ Yes ☐ No
4.	Potable water including uncontaminated water line flushing	☒ Yes ☐ No
5.	Routine external building wash down	☒ Yes ☐ No
6.	Pavement washing waters	☐ Yes ☒ No
7.	Uncontaminated air conditioning or compressor condensate	☒ Yes ☐ No
8.	Uncontaminated, non-turbid discharges of ground water or spring water	☐ Yes ☒ No
9.	Foundation or footing drains	☐ Yes ☒ No
10.	Landscape Irrigation	☒ Yes ☐ No
11.	Discharges from emergency fire-fighting activities	☐ Yes ☒ No
12.	Uncontaminated construction dewatering water	☐ Yes ☒ No

*(Note: You are required to identify the likely locations of these allowable non-stormwater discharges on your **site maps**.)*

Section 2: Site Description and Site Map

2.1 Receiving Waters/Discharge Information

Receiving Water body's Information: Stormwater discharges from this construction project will flow to the following receiving water body(ies).

No.	Name of the Receiving Waters	Is this surface water listed as impaired?	Cause of Impairment [1]	Has a TMDL [2] been completed?	TMDL Pollutant(s)
1.	Pond Creek-Canadian River	☐ Yes ☒ No		☐ Yes ☒ No	
2.		☐ Yes ☐ No		☐ Yes ☐ No	
3.		☐ Yes ☐ No		☐ Yes ☐ No	
4.		☐ Yes ☐ No		☐ Yes ☐ No	
5.		☐ Yes ☐ No		☐ Yes ☐ No	

(Note: Name of the receiving waters can be found at the DEQ website using the following link: http://gis.deq.ok.gov/flexviewer/. Cause of impairment and TMDL information can be found at the DEQ website using the following link: http://www.deq.state.ok.us/WQDnew/wqprogrms.html)

[1] *If you discharge to impaired water that is impaired for **Sediment and/or Turbidity and located within 1 mile,** you are required to comply with the additional requirements in Part 3.5.1 of OKR10 permit.*

[2] *Total Maximum Daily Load (TMDL)*

Does the project/site discharge stormwater to an **Aquatic Resource of Concern (ARC)** or an **Outstanding Resource Water (ORW)**?

☐ Yes ☒ No, If yes, I must comply with specific buffer requirements (see Part 3.5.2 of OKR10 permit) and stabilization deadlines requirements (see Part 3.5.2 of OKR10 permit).

Does the project/site discharge stormwater into a Municipal Separate Storm Sewer System (MS4)?

☒ Yes ☐ No

If yes, what is the name of the MS4 operator? CITY OF MOORE

***Note:** See Table R-5 in the MS4 Permit's Factsheet for the MS4s information.*

2.2 General Location Map

Provide a general location map (e.g., DEQ GIS Data Viewer or U.S. Geological Survey (USGS) quadrangle map or aerial image from the internet) with enough detail to identify the location of your facility and all receiving waters for your stormwater discharges within one mile of the construction site (see Part 4.3.5.D of the OKR10 permit).

☒ A **general location map** is included in **Attachment A** of this SWP3.

2.3 Site Map

SWP3 includes a legible site map or series of site maps/erosion and sediment control plans showing all the features (see also Part 4.3.5 of OKR10 permit) listed below:

- Pre-construction topographic view including vegetation, showing the location of
  - ✓ all surface water bodies within one mile of the site (including wetlands); and
  - ✓ direction of stormwater flow across the construction site (i.e., use arrows to show which direction stormwater will flow);
- Boundaries of property and identify the location(s) of:
  - ✓ Earth-disturbing activities;
  - ✓ boundary lines of any natural buffers;
  - ✓ approximate slopes before and after major grading activities,
  - ✓ areas of steep slopes, surface water crossings, Structures and other impervious surfaces upon completion of construction
- Locations of all structural and nonstructural controls/BMPs identified in the plan including showing the location of:
  - ✓ construction entrance/exit,
  - ✓ concrete wash-out area,
  - ✓ construction support activity areas such as locations of off-site materials, waste, borrow area, or equipment storage area;
  - ✓ stockpiled materials (sediment, topsoil, etc.), and
  - ✓ locations of all potential pollutant-generating activities;
- Locations where stormwater and allowable non-stormwater will be discharged off-site (should be continuously updated); sampling locations if project is subject to numeric limitations due to presence of an asphalt batch plant;
- Location where stabilization practices are expected to occur; Areas where final stabilization will be accomplished and no further construction phase permit requirements apply.

☒ The **site map or series of maps** for this facility can be found in **Attachment B** of this SWP3 showing all the above-mentioned features in Part 2.3 of this SWP3.

Section 3: Construction Site Pollutants

3.1 Pollutant-Generating Activities

Potential sources of sediment to stormwater runoff:

Clearing and grubbing operations, grading and site excavation operations, vehicle tracking, topsoil stripping and stockpiling, landscaping operations

Potential sources of pollutants, other than sediment, to stormwater runoff:

- Combined Staging Area - small fueling activities, minor equipment maintenance, sanitary facilities, and hazardous waste storage.
- Materials Storage Area - general building materials, solvents, adhesives, paving materials, paints, aggregates, trash, etc.
- Construction Activity - paving, curb/gutter installation, concrete pouring/mortar/stucco, and building construction
- Concrete Washout Area

3.2 List of Potential Pollutants

List of Pollutants that can be present at the construction site:

(Note: Check all the boxes applicable to your project site; include additional pollutants, if necessary, in the space below)

Check	Materials/ Chemicals	Stormwater Pollutants	Location at the Site
☒	Dirt from land disturbed area	Sediment	Graded Areas
☐	Pesticides (insecticides, fungicides, herbicides, rodenticides)	Chlorinated hydrocarbons, organophosphates, carbonates, arsenic	
☒	Fertilizer and dirt/soil	Nitrogen, phosphorous	Landscaped Areas
☐	Plaster	Calcium sulphate, calcium carbonate, sulfuric acid	
☐	Cleaning solvents	Perchloroethylene, methylene chloride, trichloroethylene, petroleum distillates	
☐	Asphalt	Oil, petroleum distillates	
☒	Concrete	Limestone, sand, pH, chromium	Drives/Building Construction
☐	Glue, adhesives	Polymers, epoxies	
☒	Paints	Metal oxides, Stoddard solvent, talc, calcium carbonate, arsenic	Buildings

☐	Curing compounds	Naphtha	
☐	Wood preservatives	Stoddard solvent, petroleum distillates, arsenic, copper, chromium	
☒	Hydraulic oil/fluids	Mineral oil	Trucks and Equipment
☒	Gasoline	Benzene, ethyl benzene, toluene, xylene, MTBE	Trucks and Equipment
☒	Diesel Fuel	Petroleum distillate, oil & grease, naphthalene, xylenes	Trucks and Equipment
☒	Antifreeze/coolant	Ethylene glycol, propylene glycol, heavy metals (copper, lead, zinc)	Trucks and Equipment
☒	Sanitary toilets	Bacteria, parasites, and viruses	Edge of Construction Site
☐			
☐			
☐			
☐			

Section 4: Compliance with Federal and State Requirements

4.1 Endangered or Threatened Species Protection

Eligibility Criterion

Under which criterion listed in NOI is the construction project/site eligible for coverage under the OKR10 permit?

☒ **A** ☐ **B** ☐ **C** ☐ **D** ☐ **E**

For reference purposes, the eligibility criteria listed in Part 1.2.2.E.2 of OKR10 permit are as follows:

Criterion A. The proposed construction site or land disturbing activity is not located within any of the corridors of the Federal or State identified Aquatic Resources of Concern, and further investigation is not required.

Criterion B. The proposed construction site or land disturbing activity is located within a corridor of a Federal or State identified Aquatic Resources of Concern. The SWP3 describes this area in relation to the identified water or watershed and specifies the measures to be employed to protect the endangered or threatened species or their critical habitat (see Parts 3.5.2 and 10 and Addendum A).

Criterion C. If one of those eligibility criteria under Part 1.2.2.E.2.b, d, or e cannot be met, applicants may use Addendum I Buffer Guidance to evaluate alternatives of buffer requirements and select equivalent sediment controls or contact DEQ for further consultation.

Criterion D. The applicant's federally approved construction activities are authorized by the appropriate Federal or State agency and that authorization addresses the Endangered Species Act Section 7 consultation for the applicant's stormwater discharge or stormwater discharge-related activities. Applicants selecting option d must include documentation from USFWS (U.S. Fish and Wildlife Service) or a qualified biologist that demonstrates Section 7 consultation has been completed. The SWP3 must comply with any conditions resulting from that consultation.

Criterion E. The applicant's stormwater discharges and stormwater discharge-related activities were already addressed in another operator's certification of eligibility under Part 1.2.2.E.2.a, b, c, or d. that included the applicant's project area. By certifying eligibility under Part 1.2.2.E.2.e, the applicant agrees to comply with applicable measures or controls upon which the other operator's certification under Part 1.2.2.E.2.b, c. or d. was based.

Note: ***For Criterion B, C, D, or E, you may subject to comply with additional requirements.***

4.2 Federal, State, or Local Historic Preservation Laws

Will stormwater discharges or stormwater discharge-related activities (e.g., catch basin, pond, culver, etc.) affect a property that is protected by Federal, State, or local historic preservation laws? ☐ Yes ☒ No

If yes, describe any actions taken to mitigate those effects: Click here to enter text.

Describe how this determination was made: Per Register of Historic Places

4.3 TMDL Requirements

If a TMDL or watershed plan or local compliance plan has been approved for the waterbody, SWP3 must include all the applicable requirements in consistent with the TMDL or watershed plan or local compliance plan that are applicable to the stormwater discharges from the construction site.

Does the construction project/site discharge stormwater into a receiving stream that has an approved TMDL or watershed plan or local compliance plan?

☐ Yes ☒ No

If yes, is there any waste load allocations (WLAs) and/or the TMDL's associated implementation plan requirements applicable to stormwater discharges from the construction activity?

☐ Yes ☐ No

If yes, SWP3 must incorporate any limitations, conditions, or requirements applicable to permittee's discharges to ensure that the waste load allocations (WLAs) and/or the TMDL's associated implementation plan will be met within any timeframe established in the TMDL report or watershed plan. Monitoring and reporting of the discharges may also be required as appropriate to ensure compliance with the TMDL or watershed plan.

Note: *Approved TMDL reports or watershed plans can be downloaded from DEQ's website at* http://www.deq.state.ok.us/wqdnew/tmdl/index.html

Does the construction project/site discharge stormwater to the **Lake Thunderbird watershed**?

☒ Yes ☐ No

If yes, the following control measures will be used to meet the Lake Thunderbird TMDL requirements:

- ☐ **Additional Pollutant Prevention or Discharge Monitoring** - You must comply with any additional requirements established by the local MS4 municipalities;
- ☐ **Sites of Five Acres or Larger** - You must submit a copy of SWP3 to DEQ for review;
- ☐ **Vegetated Buffer** - You must ensure that a vegetated buffer of at least 100 feet is retained or successfully established or planted between the area disturbed and all receiving streams. If the nature of the construction activity or the construction site makes a buffer impossible, you must provide equivalent controls. There are exceptions from this requirement for water crossings, limited water access, and stream restoration authorized under a CWA Section 404 permit;
- ☐ **Sediment Basins** - For all drainage locations serving 5 or more acres disturbed at one time, you must use a temporary or permanent sediment basin and/or sediment traps to minimize sediment discharges;
- ☐ **Site Inspection** - You must conduct site inspections once every 7 calendar days at a minimum, and within 24 hours of a storm event of 0.5 inches or greater and within 24 hours of a discharge caused by snowmelt;
- ☐ **Corrective Actions** - You must implement corrective actions (e.g., repair, modify, or replace any stormwater control used at the site, clean up and dispose of spills, releases, or other deposits, or remedy a permit violation) by no later than 7 calendar days from the time of discovery. If it is infeasible to complete the installation or repair within 7 calendar days, you must document in your records why it is infeasible to complete the installation or repair within the 7 calendar days timeframe and document your schedule for installing the stormwater controls and making them operational as soon as practicable after the 7 days timeframe;
- ☐ **Stabilization** - You must initiate stabilization measures immediately whenever earth-disturbing activities have permanently or temporary ceased on any portion of the site and will not resume for a period exceeding 14 calendar days. You are required to complete the stabilization activities within 7 calendar days after the permanent or temporary cessation;
- ☐ **Soil Nutrient Testing** - You are required to conduct a soil nutrient test to determine actual nutrient needs before applying fertilizer on your site. Fertilizer application must be limited to that necessary to meet actual needs on the site.
- ☐ Describe any additional measures or controls you will implement to comply with the Lake Thunderbird TMDL requirements: Click here to enter text.

Section 5: Stormwater Control Measures

The purpose of the implementation of different stormwater pollution controls is to reduce pollutants in the stormwater and the volume of stormwater leaving the construction site. All pollution control measures will be selected, installed, and maintained in accordance with the manufacturer's specifications and good engineering practices.

5.1 Stabilization Practices

Type of Site Stabilization Practice(s) that will be implementing at the construction project/site (select all that apply):

☒ Temporary ☒ Permanent ☒ Vegetative ☒ Non-Vegetative

Deadline to Initiate Stabilization: I shall initiate stabilization measures **immediately** whenever earth-disturbing activities have permanently or temporarily ceased on any portion of the site and will not resume for a period exceeding 14 calendar days.

Deadline to Complete Stabilization:

☒ I shall complete stabilization measures **as soon as practicable** but no later than 14 calendar days after the initiation of soil stabilization.

☐ My project/site is located in ARC/discharge to ORW; I shall complete stabilization measures **as soon as practicable** but no later than 7 calendar days after the initiation of soil stabilization.

Temporary Non-Vegetative Stabilization: The following **non-vegetative** controls/BMPs will be used to temporarily stabilize exposed portions of the construction site (*select all that apply*):

☐ **Rolled erosion control products such as geotextiles, blankets or plastic cover** ☐ **Soil binders**

☒ **Straw mulch** ☒ **Wood mulch** ☐ **Compost Blanket** ☐ **Other, _____**

If any of the above-referenced controls is used to temporarily protect areas that are being vegetative stabilized, one of the effective non-vegetative cover will be used to stabilize any such exposed portions of our site.

Temporary Vegetative Stabilization: The following **vegetative** controls will be used to temporarily stabilize the exposed portions of the construction site (*select all that apply*):

☐ **Hydroseeding with mulch** ☒ **Sod** ☐ **Other, _____**

Permanent Vegetative Stabilization: The following **vegetative** controls will be used to permanently stabilize the exposed portions of the construction site (*select all that apply*):

☐ **Hydroseeding with mulch** ☒ **Sod** ☒ **Planted vegetation** ☐ **Other, _____**

One of the following criteria will be used for vegetative cover:

- Provide a vegetative cover which covers 70% or more of the vegetation prior to commencing earth-disturbing activities and no large bare areas (10 square feet).
- Immediately after seeding, you must select, design, and install non-vegetative erosion controls that provide cover (such as ***straw mulch, jute matting, and straw blankets***) to the area while vegetation is being established.

Stabilization Practices Record: A record of the dates when grading activities occur, when construction activities temporarily or permanently cease on a portion of the site, and when stabilization measures are initiated shall be included with the plan. ☒ Yes ☐ No

If No, explain: _____

A record of the dates when grading activities occur will be documented using the Grading & Stabilization Activity logs in **Attachment-I** of this SWP3.

5.2 Natural Buffers and/or Equivalent Sediment Controls

Buffer Compliance Alternatives

Are there any **waters of the State** that are located within 50 feet (or 100 feet if the construction site is located in ARC or ORW or Lake Thunderbird Watershed) of your construction disturbances as measured from the top of the bank to the disturbed portions of your site? ☒ Yes ☐ No

(Note: Waters of the State means all named/unnamed stream, creeks, rivers, lakes, ponds, marshes, watercourses, waterways, wells, springs, irrigation systems, drainage systems, storm sewers and all other bodies or accumulations of water, surface and underground, natural or artificial, public or private located within the boundary of Oklahoma State.)

Construction Project/Site Location (check one only):

☐ My construction project/site isn't located in **ARC** or discharge to **ORW**

☐ My construction project/site is located in **ARC or ORW**

☒ My construction project/site is located in Lake Thunderbird Watershed or in a watershed with established TMDL that has Wasteload Allocation (WLA) for Construction Project

Check the compliance alternative that you have chosen:

☐ I will provide and maintain a 50 feet (or **100 feet** if the construction site is located in ARC or ORW or Lake Thunderbird Watershed) undisturbed natural buffer.

(Note (1): You must show the boundary line of the natural buffer on your site map.)

(Note (2): You must show on your site map how all discharges from your construction disturbances through the natural buffer area will first be treated by the site's erosion and sediment controls.)

☐ I will provide and maintain an undisturbed natural buffer that is less than 50 feet (or **100 feet** if the construction site is located in ARC or ORW or Lake Thunderbird Watershed) and is supplemented by additional erosion and sediment controls, which in combination achieves the sediment load reduction equivalent to required undisturbed natural buffer.

(Note (1): You must show the boundary line of the natural buffer on your site map.)

(Note (2): You must show on your site map how all discharges from your construction disturbances through the natural buffer area will first be treated by the site's erosion and sediment controls.)

i. Width of natural buffer to be retained: _____

ii. Method used to determine equivalent sediment load reduction:

☐ Addendum-I: Buffer Guidance in OKR10 permit

a. Soil Type: _____

b. Buffer Vegetation: _____

OR

☐ Site-specific calculation

a. Model or other tool used to estimate sediment load reductions:

_____

b. Results of calculations: _____

_____

c. Description of additional erosion and sediment controls used:

_____

_____

☐ It is infeasible to provide and maintain an undisturbed natural buffer of any size; therefore, I will implement erosion and sediment controls that will achieve the sediment load reduction equivalent to a 50 feet (or 100 feet if the construction site is located in ARC or ORW or Lake Thunderbird Watershed) undisturbed natural buffer.

i. Rationale for concluding that it is infeasible to provide and maintain a natural buffer of any size:

_____

_____

ii. Method used to determine equivalent sediment load reduction:

☐ Addendum-I: Buffer Guidance in OKR10 permit

a. Soil Type: _____

b. Buffer Vegetation: _____

OR

☐ Site-specific calculation

a. Model or other tool used to estimate sediment load reductions:

_____

b. Results of calculations: _____

_____

c. Description of additional erosion and sediment controls used:

_____

☒ I qualify for one of the following exceptions (*select one that applies to your project/site*):

☒ There is no discharge of stormwater to the surface water that is located 50 feet from my construction disturbances.

☐ No natural buffer exists due to preexisting development disturbances that occurred prior to the initiation of planning for this project.

☐ Buffer disturbances are authorized under a CWA Section 404 permit.

☐ Buffer disturbances will occur for the construction of a water-dependent structure or water access area (e.g., pier, boat ramp, and trail).

5.3 Structural Controls/Best Management Practices (BMPs)

The table below listed Structural and Non-Structural Stormwater Controls/Best Management Practices (BMPs) that should be considered for every construction project/site to meet **the non-numeric technology-based effluent limitations, water-based effluent limitations and applicable numeric technology-based effluent limitations.**

The following BMPs will be used or implemented at the construction project/site (*select all that apply*):

Erosion Controls		Sediment Controls	
☐	Preservation of Existing Vegetation	☒	Silt Fence
☐	Vegetative Swales	☐	Silt Dikes
☐	Hydroseeding with Mulch	☐	Compost Sock
☐	Hydraulic Mulch	☐	Check Dam
☒	Wood Mulching	☐	Fiber Rolls
☒	Straw Mulching	☒	Storm Drain Inlet Protection
☐	Compost Blankets	☐	Outlet Protection/Velocity Dissipation Devices
☐	Soil Binders	☐	Earth Berms and Drainage Swales
☐	Geotextiles and Mats	☒	Sand Bag Barrier
☐	Soil Preparation/Roughening	☐	Gravel Bag Berm/Barrier
☒	Sod	☐	Sediment Basin
☐	Streambank Stabilization	☐	Sediment Trap
Tracking Controls		☐	Rip-rap
☒	Stabilized Construction Entrance/Exit	☐	Gabions
☐	Stabilized Construction Roadway	**Non-Structural Controls**	
☒	Entrance/Exit Tire Wash	☒	Phasing and Scheduling
☒	Street Sweeping and Vacuuming	☒	Dust Suppression
Other Structural Controls		☒	Dust Suppression
☒	Vegetative Buffers	☒	Good Housekeeping
☒	Non-Vegetative Stabilization	☐	Preventive Maintenance
☐	Concrete Waste Management	☐	Preservation of Top Soil

☐	Dewatering Controls	☐	Minimizing Soil Compaction
☒	SOD	☐	Fertilizer Application Management
☐		☐	

Did you **include specifications** of all the selected structural BMPs with the SWP3?

☒ Yes ☐ No, if no, explain the reason:

5.3.1 Perimeter Control

Permit requirement: *You must install controls along the perimeter of your site that will receive stormwater from your construction activities.* *(Examples of perimeter controls include, but are not limited to,* ***silt fences, fiber rolls, filter berms,*** *and* ***temporary diversion dikes.****)*

To comply with Part 3.3.1.C of OKR10 permit, I shall use the following type of perimeter control(s) at my construction site:

Perimeter Control Description: Silt Fence

Installation Date(s): prior to construction

Maintenance Requirements: I shall remove sediment before it has accumulated to one-half of the above-ground height of any perimeter control. Silt fence will be inspected for rips or tears in the fabric, areas where the fence has been knocked down and areas where the fence has been undermined.

5.3.2 Sediment Track-Out

Permit requirement: *You must minimize the track-out of sediment onto off-site streets, other paved areas, and sidewalks from vehicles exiting your construction site.* *(Note: you may use most recent ODOT or OKC specifications for construction entrance/exit - use of aggregate stone with an underlying* ***geotextile or non-woven filter fabric, or turf mats.****)*

To comply with the Part 3.3.1.D of OKR10 permit, I shall use the following type of sediment track-out control at my construction site:

Track-Out Control/Construction Entrance/Exit Description: Construction Entrance & Wheel Washout

Installation Date(s): prior to construction

Maintenance Requirements: I shall minimize the track-out of sediment onto off-site streets, other paved areas, and sidewalks from vehicles exiting our construction site.

Track-out Removal/Cleaning:

☒ I shall remove the track-out by sweeping, shoveling, or vacuuming these surfaces, or by using other similarly effective means of sediment removal.

☒ I shall remove the deposited sediment by the **end of the same work day** in which the track-out occurs or by the end of the next work day if track-out occurs on a non-work day where sediment has been tracked-out from my construction site onto the surface of off-site streets, other paved areas, and sidewalks.

☒ I am prohibited from hosing or sweeping tracked-out sediment into any stormwater conveyance (unless it is connected to a sediment basin, sediment trap, or similarly effective control).

5.3.3 Stockpiled Sediment or Soil

Permit requirement: *You must control discharge of stormwater from Stockpiled Sediment or Soil.*

To comply with the Part 3.3.1.E of OKR10 permit, I shall use temporary perimeter sediment barrier such as ***berms, dikes, fiber rolls, silt fences, sandbag, or gravel bags*** to protect from contact with stormwater (including run-on).

I shall use appropriate cover or temporary stabilization such as ***mulching or hydro-mulching*** to avoid direct contact with precipitation or to minimize sediment discharge.

Installation Date(s): TBD

Maintenance Requirements: I shall not hose down or sweep soil or sediment accumulated on pavement or other impervious surfaces into any stormwater conveyance (unless connected to a sediment basin, sediment trap, or similarly effective control), storm drain inlet, and/or surface water.

5.3.4 Minimize Dust

Permit requirement: *You must minimize the generation of dust to avoid pollutant discharges to the extent feasible through application of water or other dust suppression techniques.*

Dust Control Description: To comply with the permit requirement and to avoid any pollutants, particularly soil/sediment, from being discharged into surface waters, I shall apply/spray water using spray truck or sprinklers to minimize the generation of dust from my construction site.

5.3.5 Minimize the Disturbance of Steep Slopes

Permit requirement: *You must minimize the disturbance of steep slopes (i.e., slopes of 40% or greater).*

Steep Slope Control Description: N/A

Installation Date(s): _____

Maintenance Requirements: Click here to enter text.

5.3.6 Preserve Topsoil

Permit requirement: *You must preserve native topsoil on your site, unless infeasible; you must stockpile and reuse it in areas that will be stabilized with vegetation.*

Topsoil Control Description: I shall preserve native topsoil on our site as much as possible and practicable.

Maintenance Requirements: I shall stockpile and reuse preserved top soil in areas that will be stabilized with vegetation.

5.3.7 Minimize Soil Compaction

Permit requirement: *In areas of your site where final vegetative stabilization will occur or where infiltration practices will be installed, you must minimize soil compaction.*

Soil Compaction Control Description: In areas of your site where final vegetative stabilization will occur or where infiltration practices will be installed, I shall restrict vehicle and/or equipment use in these areas to avoid or minimize soil compaction.

5.3.8 Protection of Storm Drain Inlets

Permit requirement: *If you discharge to a storm drain inlet that you have access to, you must install protection measures that remove sediment from your stormwater discharge. (Examples of inlet protection measures include **fabric filters, sandbags, or gravel barriers** -- Install inlet protection measures that remove sediment from your discharge prior to entry into the storm drain inlet.)*

Storm Drain Inlet Control Description: sand bags

Installation Date(s): prior to construction

Maintenance Requirements: I shall clean, or remove and replace the protection measures as sediment accumulates, the filter becomes clogged, and/or performance is compromised. Where there is evidence of sediment accumulation adjacent to the inlet protection measure, I shall remove the deposited sediment by **the end of the same work day** in which it is found or by the end of the following work day if removal by the same work day is not feasible.

5.3.9 Constructed Stormwater Conveyance Channels

*(Note: Examples of velocity dissipation devices include **check dams, sediment traps, riprap, or grouted riprap at outlets**, include design specifications)*

Stormwater Conveyance Channel Control Description: N/A

☐ If Silt dikes/Check dams are **used in series**, I shall space them at appropriate interval so that ***the base of the upstream dike is at the same elevation as the top of the next downstream dike***. Spacing of silt dikes/check dams is indicated on the site plans of SWP3.

Installation Date(s): _____

Maintenance Requirements: all check dams/rip-rap will be inspected during facility inspection for erosion, undermining or breeches. Any damage will be repaired immediately.

5.3.10 Sediment Basins

Permit requirement*: For common drainage locations that serve an area of 10 or more acres disturbed at one time (or 5 acres if it is located in ARC), a temporary (or permanent) sediment basin shall be provided where attainable until final stabilization of the site.*

Are 10 or more (or 5 or more if site discharges to an ORW/ARC) acres draining to a common point?

☐ Yes ☒ No

Is a sediment basin included in the project? ☐ Yes ☒ No

If yes, what is the designed capacity for the storage?

☐ 3600 cubic feet per acre: _____

OR

☐ 2-year, 24 hour storm: _____

OR

☐ Other criteria were used to design basin: _____
_____

If no, explain why no sedimentation basin was included and describe required natural buffer areas and other controls implemented instead: _____
_____
_____

Maintenance Requirements: I shall keep the sediment basin in effective operating condition and remove accumulated sediment to maintain at least ½ of the design capacity of the sediment basin at all times.

5.3.11 Dewatering Practices

Permit requirement: *You are prohibited from discharging stormwater that is removed from excavations, trenches, foundations, vaults, or other similar points of accumulation associated with a construction activity, unless such waters are first effectively managed by appropriate controls.*

Dewatering Practice Description: Click here to enter text.

Installation Date(s): _____

Maintenance Requirements: Click here to enter text.

5.3.12 Other Stormwater Controls

Stormwater Control Practice # 1

Description: Click here to enter text.

Installation Date(s): _____

Maintenance Requirements: Click here to enter text.

Stormwater Control Practice # 2

Description: Click here to enter text.

Installation Date(s): _____

Maintenance Requirements: Click here to enter text.

Section 6: Pollution Prevention Controls

6.1 Spill Prevention and Responses

Spill Prevention

Is there an existing Spill Prevention Control and Countermeasure (SPCC) plan developed for the site?

☐ Yes ☒ No, if yes, keep a copy of the SPCC plan onsite with this SWP3.

If No, describe procedures for quickly stopping, containing, and cleaning up spills, leaks, and other releases:
Contractor will follow Corrective Action Protocol. Contractor shall use spill kit and contact appropriate agencies and clean up spills immediately, using dry-clean up where possible

Emergency Spill Notification

In case of a toxic or hazardous material spill, notify:	Phone Numbers
Project Manager/Team Leader	Samuel Harle 214-455-3472
Emergency – Fire, Police	911
County Local Emergency Planning Committee (LEPC)	405-713-1360
DEQ Spill Reporting Hotline (24-hr)	800-522-0206
NRC (National Response Center)	800-424-8802

6.2 Waste Management Procedures

All wastes generated at the construction site, including, but not limited to, clearing and demolition debris, sediment removed from the site, construction and domestic waste, hazardous or toxic waste, and sanitary waste, shall be prevented from being discharged to Waters of the State. The following BMP measures will be used to handle trash disposal, hazardous or toxic waste, sanitary waste, recycling, and proper material handling:

☒ **Trash Dumpsters:** dumpsters will have a secure watertight lid, will be closed during precipitation or not in use, and will be placed away from stormwater conveyances and drains, and meet all federal, state, and municipal regulations. Only trash and construction debris from the site will be deposited in the dumpster. No construction materials will be buried on site.

☒ **Hazardous Waste Containment:** hazardous waste materials will be stored in appropriate and clearly marked containers and segregated from other non-waste materials.

☒ **Portable Toilets:** portable toilets will be secured to prevent tipping, located away from stormwater inlets and conveyances. These toilets will be anchored with the ground to prevent any tipped or knocked over and/or sand bags around to ensure wastewater doesn't mix with the stormwater.

☒ **Recycling Bins/Dumpsters**: wood pallets, cardboard boxes, and other recyclable construction scraps will be disposed of in a designated dumpster for recycling. The dumpster will have a secure watertight lid, will be closed during precipitation or not in use, and will be placed away from stormwater conveyances and drains and meet all local and state solid-waste management regulations.

☒ **Proper Material Handling:** containers will be tightly sealed when not in use, and excess paint shall be disposed of according to Oklahoma requirements and manufacturer's recommendations. Minimum amounts of fertilizer, as recommended by the manufacturer, will be used. Upon application the fertilizer will be worked into the soil to limit exposure to stormwater. Contents of partially used bags will be transferred to a sealable plastic bin, and then stored in a covered area.

☒ **Good housekeeping:** construction debris, trash, and other floatable material will be collected and prevented from becoming a pollutant source on the following schedule:
Click here to enter text.

☒ **Minimizing exposure:** construction products, materials, chemicals, and wastes will be stored in such a way that they are prevented from coming into contact with stormwater (e.g., plastic sheeting or temporary roofs).

☒ **Designated concrete washout:** all concrete washwater will be directed into a leak-proof container or pit. The container or pit will be designed so that no overflows can occur due to inadequate sizing or precipitation and located as far away as possible from surface waters and stormwater inlets or conveyances. I shall use ***20 mil synthetic liners or similar equivalent liners*** to make the pit leak proof.

☐ Other: Click here to enter text.

6.3 Prohibited Discharges

The following discharges from the construction project/site are prohibited under the permit, and are considered a violation should any occur.

- Wastewater from the washout of concrete, unless managed by an appropriate control as described in Part 3.3.3.B.4 of OKR10 permit;
- Wastewater from the washout and cleanout of stucco, paint, form release oils, curing compounds and other construction materials, unless managed by an appropriate control as described in Part 3.3.3.B.4 of OKR10 permit;
- Fuels, oils, or other pollutants used in vehicle and equipment operation and maintenance;
- Soaps, detergents or solvents used in vehicle and equipment washing; and
- Toxic or hazardous substances from a spill or other release.

☒ In the event that one of these above-mentioned discharges occurs, I will take corrective action consistent with Part 7.4 of this SWP3.

Section 7: Procedures and Documentations

7.1 Maintenance and Repair

I shall ensure that all pollution prevention controls installed in accordance with the requirements of OPDES Construction General Permit OKR10 and remain in effective operating condition and are protected from activities that would reduce their effectiveness. All structural BMPs (i.e. all the Erosion & Sediment Controls) that require a repair of any kind (due to normal wear and tear, or as a result of damage) or require maintenance in order for the control to continue operating effectively shall be required/maintained in accordance with the OPDES Construction General Permit requirements. At a minimum, maintenance will be performed in the following specific instances:

☒ for perimeter controls, whenever sediment has accumulated to ½ or more the above-ground height of the control (Part 3.3.1.C of OKR10 permit);

☒ where sediment has been tracked-out onto the surface of off-site streets or other paved areas (Part 3.3.1.D of OKR10 permit);

☒ for inlet protection measures, when sediment accumulates, the filter becomes clogged, and/or performance is compromised (Part 3.3.1.J of OKR10 permit); and

☒ for sediment basins, as necessary to maintain at least ½ of the design capacity of the basin (Part 3.3.1.L of OKR10 permit).

☒ for all structural BMPs, repair of any kind (due to normal wear and tear, or as a result of damage) or maintenance will be performed in order for the BMPs to continue operating effectively.

7.2 Approval from Local Office

☒ I already checked local offices (city and county offices) to ensure SWP3 for my construction activities is consistent with requirements of the City and/or County Offices.

☒ I shall update the SWP3, if necessary, to make consistent with any changes applicable to protecting surface water resources in sediment erosion site plans or site permits, or stormwater management site plans or site permits approved by local officials for which I received written notice.

7.3 Inspections

(Note: An inspector must be knowledgeable in the principles and practices of erosion and sediment controls and pollution prevention to assess conditions at the construction site that could impact stormwater quality, and the effectiveness of any stormwater controls.)

Person Responsible for Inspections:

General Procedures: During each inspection, the following areas of the construction site will be inspected:

- Cleared, graded, or excavated areas of the site;
- Stormwater controls (e.g., perimeter controls, silt dykes, check dams, sediment basins, inlets, exit points etc.) and pollution prevention practices (e.g., pollution prevention practices for vehicle fueling/maintenance and washing, construction product storage, handling, and disposal, etc.) at the site;
- Material, waste, or borrow areas covered by the permit, and equipment storage and maintenance areas;
- Evidence of a spill, leak, or other type of pollutant discharge, or failure to have properly cleaned up a previous spill, leak, or other type of pollutant discharge;
- Areas where stormwater flows within the site, stormwater discharge points;
- Identify any other incidents of non-compliances observed; and
- Areas where stabilization has been implemented.

Inspection Frequency:

☐ **Once every 7 calendar days** and within 24 hours of the end of a storm event of 0.5 inches or greater, since my project is located in **ARC** or discharge to an impaired water.

☒ **Once every 14 calendar days** and within 24 hours of the end of a storm event of 0.5 inches or greater.

Reductions in Inspection Frequency (if applicable):

- For the reduction in inspections resulting from stabilization: **Once per month** for the portion of the site that was stabilized per Part 3.3.2 of OKR10 permit.

Rain Gauge to Measure Qualified Storm Event of 0.5 inches or greater:

Location of the Rain Gauge: Mesonet

Inspection Report Forms:

Inspection Report Form has been prepared in accordance with the requirements of Part 4.3.13 of OKR10 permit. A copy of the Inspection Report Form that will be used during construction of this project included in **Attachment E** of this SWP3.

7.4 Corrective Action

General: Corrective actions are actions taken to modify, replace, or reinstall any stormwater control used at the site; clean up and dispose of spills, releases, or other deposits; or remedy a permit violation.

Corrective actions are triggered only for specific, more serious conditions. For any of the following conditions, a new or modified control shall be installed **no later than 7 calendar days** from the discovery:

- A required stormwater control was never installed or was installed incorrectly, or not in accordance with the corresponding OKR10 permit requirement;
- A stormwater controls needs to be repaired or replaced (beyond routine maintenance required in Part 4.3.12 of OKR10 permit);
- A stormwater control is not effective enough for the discharge to meet applicable water quality standards;
- A prohibited discharge (Parts 3.1 and 3.3.3.A of OKR10 permit) is occurring or has occurred; or
- DEQ or MS4 Operator requires corrective action as a result of permit violations found during a inspection.

☒ I shall immediately take all reasonable steps to minimize or prevent the discharge of pollutants until a permanent solution is installed and made operational, including cleaning up any contaminated surfaces so that the material will not discharge in subsequent storm events. I shall conduct corrective action(s) for each of the above-mentioned triggering conditions should they occur at my construction site.

Person Responsible for Corrective Actions: Click here to enter text.

Corrective Action Schedule/Specific Action Frequency:

☒ I shall perform all Corrective Actions (modify, replace, or reinstall), if identified, **no later than 7 calendar days from** the time of discovery.

Corrective Action Forms:

Corrective Action Report Form has been prepared in accordance with the requirements of Part 4.3.14 of OKR10 permit. A copy of the Corrective Action Report Form that will be used during construction of this project included in **Attachment F** of this SWP3.

7.5 Employee Training

Person Responsible for Staff Training

Name: _____ **Title:** _____

Staff Training Requirements

Prior to the start of earth-disturbing activities, personal with the following responsibilities shall be trained to understand all the requirements of this SWP3:

- Proper design, installation, and maintenance/repair of stormwater controls.
- The proper application and storage of chemicals.
- Proper Inspection and corrective actions.

At minimum, all Personnel must be trained to understand:

- The location of all stormwater controls and the maintenance requirements for each of the control.
- The pollution prevention requirements outlined in this SWP3.
- When and how to conduct inspections, record applicable findings and take necessary corrective actions.

Frequency/Schedule of Employee Training: annually

(***Note:*** *Employee training shall be conducted at least annually or more often if employee turnover is high*).

Employee training records and documentations shall be maintained using the **Employee Training Report** located in **Attachment G** of this SWP3.

7.6 Notification of Change of Ownership (NCO) for Individual Lots

☐ SWP3 will include documents if lots are sold and transfer to other new operator(s), (see Part 2.2.3 of OKR10 permit). Documents will be included under **Attachment M** of this SWP3.

☒ NCO is not applicable to my project/site.

7.7 Sub-contractor Certifications

☐ Sub-contractor certification forms will not be used for this project.

☐ DEQ's sub-contractor certification form (**Attachment M**) will be used and kept onsite with the SWP3.

☒ A form other than DEQ's form will be used and kept onsite with the SWP3.

7.8 Record Keeping and Record Retention

☒ I shall retain copies of the SWP3 and all reports required by the 2017 OKR10 permit, and records of all data used to complete the NOI to be covered by this permit, for a **period of at least 3 years** from the date that the site is finally stabilized.

7.9 Posting a Notice

☒ I shall post a notice near the main entrance of the construction site with the following information:

- The OPDES permit number for the project or a copy of the NOI if a permit number has not yet been assigned;
- The name and telephone number of a local contact person;
- A brief description of the project; and
- Location of the SWP3

A **sample copy of the Notice** is included in **Attachment M** of this SWP3.

Section 8: Additional Monitoring (if applicable)

(Note: Only applicable if you have Concrete Batch Plant and/or Asphalt Plant that is covered under your OKR10 authorization)

8.1 Support Activity Covered by this Plan

☐ Concrete Batch Plant ☐ Asphalt Plant ☐ Both ☒ Not Applicable

8.2 Representative Outfall(s)

Are there substantially identical outfalls? ☐ Yes ☐ No

If yes, which outfalls are substantially identical? _____

Which outfall(s) will be sampled? _____

8.3 Structural & Non-Structural BMPs

Perimeter control and retention/detention pond will be installed. All exposed areas will be kept clean and orderly manner to minimize exposure. Structural controls will be maintained to keep these effective and operational.

8.4 Quarterly Visual Monitoring

In addition to routine site inspection, quarterly visual monitoring, qualified facility inspector will perform quarterly visual monitoring:

1. Quarterly visual monitoring assessments will be conducted using the form in **Attachment J** of this SWP3. Each drainage point will be visually inspected on a quarterly basis. If no qualifying storm event occurs during a monitoring quarter, this will be noted on the quarterly visual monitoring report for that quarter.

2. Samples will be collected from each outfall, will be examined and documented observations of color, odor, clarity, floating solids, settled solids, suspended solids, foam, oil sheen, and other obvious indicators of stormwater pollution using the quarterly visual monitoring form and will occur during daylight hours (e.g., normal working hours).

3. Completed quarterly visual monitoring forms will be kept with the SWP3.

8.5 Comprehensive Site Compliance Evaluation

1. A comprehensive site compliance evaluation will be conducted at least once annually. If the project is less than one year, at least one inspection will be conducted, which will include all areas where industrial materials or activities are exposed to stormwater and areas where spills and leaks have

occurred within the past **3 years**.

2. A report resulting from this inspection will be submitted to DEQ by **March 1** of the year following the monitoring period using the form in **Attachment K** of this SWP3.

8.6 Numeric Effluent Limitation Monitoring for Asphalt Plant

1. Stormwater discharges from asphalt plants must comply with the limitations and monitoring requirements listed below.

Parameter	Limitation	Monitoring Frequency	Sample Type
Total Suspended Solids	23 mg/L, daily max. 15 mg/L, 30-day avg.	1/year	Grab
Oil and Grease	15 mg/L, daily max. 10 mg/L, 30-day avg.	1/year	Grab
pH	6.5 - 9.0, min. and max.	1/year	Grab

2. Annual monitoring period is from **January 1 to December 31**. If the project is less than one year, at least one sample must be collected.

3. Laboratory analyses for the parameters specified above must be performed by a laboratory certified by DEQ for those parameters.

4. Monitoring will be performed on a storm event that results in an actual discharge from the construction site (at least **0.1 inch** of stormwater event defined as a **measurable storm event**) that follows the preceding measurable storm event by at least 72 hours (3 days).

5. A minimum of one grab sample will be collected within the first 30 minutes of the discharge resulting from a measurable storm event. If it is not practicable to take the sample during the first 30 minutes, the sample must be collected as soon as practicable after the first 30 minutes and document why it was not possible to take samples within 30 minutes.

6. Monitoring information will be submitted on a discharge monitoring report (DMR) form (see **Attachment L**) by **March 1** of the year following the monitoring period.

7. If an exceedance of a numeric effluent limit occurs, follow-up monitoring will be conducted within 30 calendar days, or during the next qualifying storm event, of implementing corrective actions.

Person(s) and positions of person(s) responsible for monitoring: Click here to enter text.

Sample location(s): Click here to enter text.

Monitoring Schedules: Click here to enter text.

8.7 Additional Procedures for Concrete Batch Plant

Is there a mobile batch plant associated with this construction project/site?

☐ No ☐ Yes, If yes, permit number: OKG11_____

How long will the batch plant be utilized?

☐ Less than 180 days

☐ Greater than 180 days

Will wastewater be used for dust suppression?

☐ No ☐ Yes, If yes, the following requirements must be met:

a. The wastewater to be land applied shall be free from visible sheen of oil or globules of oil or grease and shall have a pH of between 6.5 s.u. and 9.0 s.u.
b. The wastewater to be land applied for dust suppression shall be visually inspected prior to land application. An inspection log shall be maintained at the site and made available to DEQ personnel upon request.
c. There shall be no land application of wastewater in areas where the depth to maximum seasonal groundwater level is less than 2 feet in accordance with OAC 252:616-5-1(b)(2)(E).
d. There shall be no land application of wastewater during periods of precipitation or when soil is saturated or frozen.
e. There shall be no runoff of wastewater from the land application site(s).
f. The permittee shall keep a logbook which records the time and date, the source and the volume of wastewater used, and the area to which the wastewater .

Describe the liner used for any surface impoundments: Click here to enter text.

Is the bottom of all surface impoundments at least 15 feet above groundwater levels?

☐ No ☐ Yes

The following berm/dike slope requirement will be followed:

☐ For sites utilized less than 180 days, a 1:2 (1 vertical to 2 horizontal) slope

☐ For sites utilized more than 180 days, a 1:3 (1 vertical to 3 horizontal) slope

Section 9: SWP3 Certification

I certify under penalty of law that this document and all attachments were prepared under my direction or supervision in accordance with a system designed to assure that qualified personnel properly gathered and evaluated the information submitted. Based on my inquiry of the person or persons who manage the system, or those persons directly responsible for gathering the information, the information submitted is, to the best of my knowledge and belief, true, accurate and complete. I am aware that there are significant penalties for submitting false information, including the possibility of fine and imprisonment for knowing violations.

Name: _____ **Title:** _____

Signature: _____ **Date:** _____

Section 10: SWP3 Modifications

I shall maintain records of modifications that will be made per Part 4.3.19 of OKR10 permit, and other reasons in **Attachment H** of this SWP3:

Click here to enter text.

Section 11: SWP3 Attachments & Additional Documentation

The following documentations are attached to the SWP3:

Attachment A – General Location Map

A copy of general location map is included in Attachment A.

Attachment B – Site Map(s)

Copy of the site map(s) is/are included in Attachment B.

Attachment C – 2017 OKR10

Note: it is helpful to keep a printed-out copy of the 2017 OKR10 so that it is accessible to you for easy reference. However, you do not need to formally incorporate the entire 2017 OKR10 into your SWP3. As an alternative, you can include a reference to the permit and where it is kept at the site.

Attachment D – Notice of Intent (NOI)

A copy of your NOI is included in Attachment D.

Attachment E – Inspection Report

A copy of the Routine Facility Inspection Report Form is included in Attachment E.

Attachment F – Corrective Action Report

A copy of Corrective Action Report Form is included in Attachment F.

Attachment G – Employee Training Report

A copy of Employee Training Log is included in Attachment G.

Attachment H – SWP3 Modifications Log

A copy of Report on SWP3 Modifications/Amendments Log is included in Attachment H.

Attachment I – Site Stabilization Log

A copy of Site Stabilization Log is included in Attachment I.

Attachment J – Quarterly Visual Monitoring Report

N/A

Attachment K – Annual Site Evaluation Report

N/A

Attachment L – Discharge Monitoring Report (DMR)

N/A

Attachment M – NCOs and Other Documentations

Construction Site Notice

Attachment "A" - General Location Map

NW 13th Pl
NW 14th St
Dollar Tree
Wrench Worxsauto Shop
NW 12th St
Las Bandidas Mexican
Grace Pointe Living
NW 9th St
NW 9th St
NW 8th St
Highland West JH
Highland West Jr High School
Highland West Jr High School
Lakecrest Dr
N Briarcliff Dr
NW 7th Pl
NW 7th Pl
Greenbriar Park
Cedarbrook Ln
NW 6th Pl
Waterview Ct
Cypress Dr
Church of the Lamb
NW 6th St
N Markwell Ave
N Norman Ave
Butler St
Arnold Ave
© 2023 Google

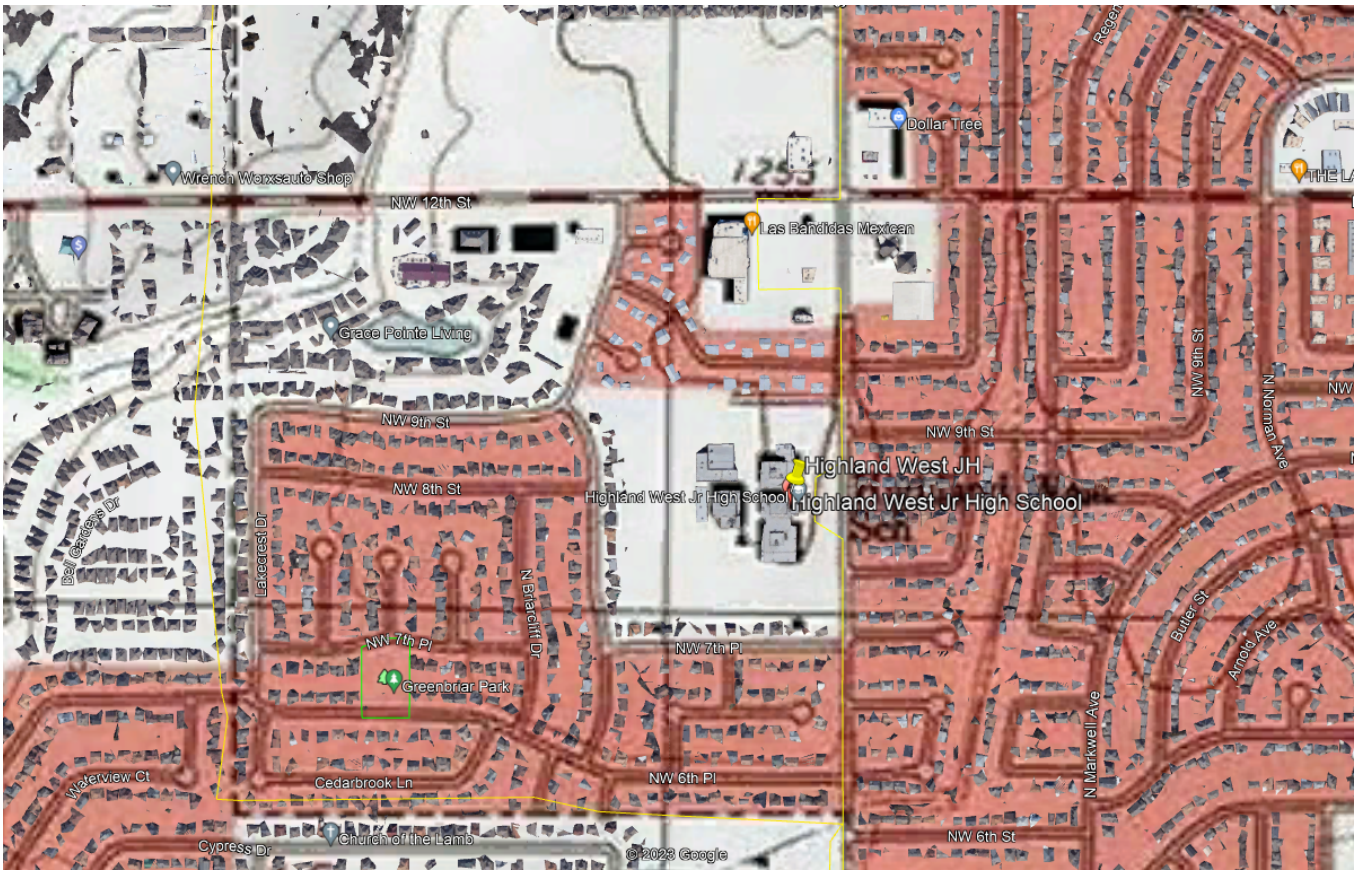
Dollar Tree
Wrench Worxsauto Shop
NW 12th St
Las Bandidas Mexican
Grace Pointe Living
NW 9th St
NW 9th St
NW 8th St
Highland West JH
Highland West Jr High School
Highland West Jr High School
Lakecrest Dr
N Briarcliff Dr
NW 7th Pl
NW 7th Pl
Greenbriar Park
Cedarbrook Ln
NW 6th Pl
Waterview Ct
Cypress Dr
Church of the Lamb
NW 6th St
N Markwell Ave
N Norman Ave
Butler St
Arnold Ave
© 2023 Google

Attachment "B" - Site Maps

Contractor to keep up with latest plans

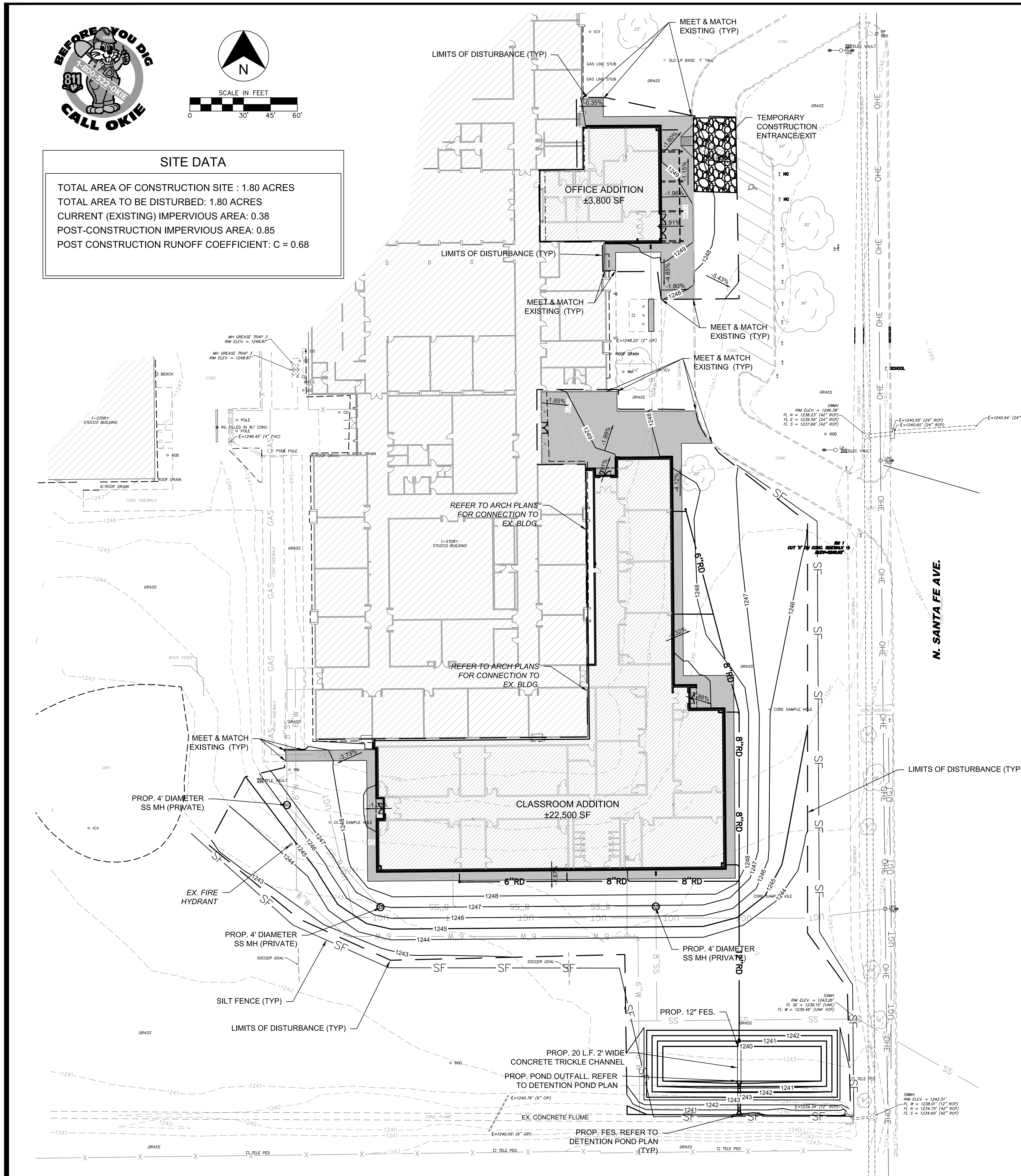

SITE DATA

TOTAL AREA OF CONSTRUCTION SITE : 1.80 ACRES
TOTAL AREA TO BE DISTURBED: 1.80 ACRES
CURRENT (EXISTING) IMPERVIOUS AREA: 0.38
POST-CONSTRUCTION IMPERVIOUS AREA: 0.85
POST CONSTRUCTION RUNOFF COEFFICIENT: C = 0.68

EROSION CONTROL NOTES

A. SEDIMENT BASINS ARE ATTRACTIVE TO CHILDREN AND CAN BE VERY DANGEROUS. IN ALL CASES, LOCAL ORDINANCES AND REGULATIONS REGARDING HEALTH AND SAFETY MUST BE ADHERED TO.

B. ALL CONTRACTORS AND SUBCONTRACTORS INVOLVED WITH STORM WATER POLLUTION PREVENTION SHALL OBTAIN A COPY OF THE STORM WATER POLLUTION PREVENTION PLAN AND THE STATE OF OKLAHOMA NATIONAL POLLUTANT DISCHARGE ELIMINATION SYSTEM GENERAL PERMIT (NPDES PERMIT) AND BECOME FAMILIAR WITH THEIR CONTENTS.

C. ALL TEMPORARY EROSION AND SEDIMENT CONTROL MEASURES SHALL BE DISPOSED OF WITHIN 30 DAYS AFTER FINAL STABILIZATION. FINAL STABILIZATION HAS OCCURRED WHEN ALL SOIL DISTURBING ACTIVITIES ARE COMPLETED AND A UNIFORM PERENNIAL VEGETATIVE COVER WITH A DENSITY OF 70% OF THE COVER FOR UNPAVED AREAS AND AREAS NOT COVERED BY PERMANENT STRUCTURES HAS BEEN EMPLOYED.

D. BEST MANAGEMENT PRACTICES (BMP'S) AND CONTROLS SHALL CONFORM TO FEDERAL, STATE, OR LOCAL REQUIREMENTS OR MANUAL OF PRACTICE, AS APPLICABLE CONTRACTOR SHALL IMPLEMENT ADDITIONAL CONTROLS AS DIRECTED BY PERMITTING AGENCY OR OWNER.

E. CONTRACTOR SHALL MINIMIZE CLEARING TO THE MAXIMUM EXTENT PRACTICAL OR AS REQUIRED BY THE GENERAL PERMIT.

F. GENERAL CONTRACTOR SHALL DENOTE ON PLAN THE TEMPORARY PARKING AND STORAGE AREA WHICH SHALL ALSO BE USED AS THE EQUIPMENT MAINTENANCE AND CLEANING AREA, EMPLOYEE PARKING AREA, AND AREA FOR LOCATING PORTABLE FACILITIES, OFFICE TRAILERS, AND TOILET FACILITIES.

G. ALL WASH WATER (CONCRETE TRUCKS, VEHICLE CLEANING, EQUIPMENT CLEANING, ETC.) SHALL BE DETAINED AND PROPERLY TREATED OR DISPOSED.

H. SUFFICIENT OIL AND GREASE ABSORBING MATERIALS AND FLOTATION BOOMS SHALL BE MAINTAINED ON SITE OR READILY AVAILABLE TO CONTAIN AND CLEAN-UP FUEL OR CHEMICAL SPILLS AND LEAKS.

I. DUST ON THE SITE SHALL BE CONTROLLED. THE USE OF MOTOR OILS AND OTHER PETROLEUM BASED OR TOXIC LIQUIDS FOR DUST SUPPRESSION OPERATIONS IS PROHIBITED.

J. RUBBISH, TRASH, GARBAGE, LITTER, OR OTHER SUCH MATERIALS SHALL BE DEPOSITED INTO SEALED CONTAINERS. MATERIALS SHALL BE PREVENTED FROM LEAVING THE PREMISES THROUGH THE ACTION OF WIND OR STORMWATER DISCHARGE INTO DRAINAGE DITCHES OR WATERS OF THE STATE.

K. ALL STORM WATER POLLUTION PREVENTION MEASURES PRESENTED ON THIS PLAN, AND IN THE STORM WATER POLLUTION PREVENTION PLAN, SHALL BE INITIATED AS SOON AS PRACTICABLE.

L. DISTURBED PORTIONS OF THE SITE WHERE CONSTRUCTION ACTIVITY HAS STOPPED FOR AT LEAST 14 DAYS, SHALL BE TEMPORARILY SEEDED. THESE AREAS SHALL BE SEEDED NO LATER THAN 14 DAYS FROM THE LAST CONSTRUCTION ACTIVITY OCCURRING IN THESE AREAS.

M. DISTURBED PORTIONS OF THE SITE WHERE CONSTRUCTION ACTIVITY HAS PERMANENTLY STOPPED SHALL BE PERMANENTLY SEEDED. THESE AREAS SHALL BE SEEDED NO LATER THAN 14 DAYS AFTER THE LAST CONSTRUCTION ACTIVITY OCCURRING IN THESE AREAS. REFER TO THE GRADING PLAN AND/OR LANDSCAPE PLAN.

N. IF THE ACTION OF VEHICLES TRAVELING OVER THE GRAVEL CONSTRUCTION ENTRANCES IS NOT SUFFICIENT TO REMOVE THE MAJORITY OF DIRT OR MUD, THEN THE TIRES MUST BE WASHED BEFORE THE VEHICLES ENTER A PUBLIC ROAD. IF WASHING IS USED, PROVISIONS MUST BE MADE TO INTERCEPT THE WASH WATER AND TRAP THE SEDIMENT BEFORE IT IS CARRIED OFF THE SITE.

O. ALL MATERIALS SPILLED, DROPPED, WASHED, OR TRACKED FROM VEHICLES ONTO ROADWAYS OR INTO STORM DRAINS MUST BE REMOVED IMMEDIATELY.

P. CONTRACTORS OR SUBCONTRACTORS WILL BE RESPONSIBLE FOR REMOVING SEDIMENT IN THE DETENTION POND AND ANY SEDIMENT THAT MAY HAVE COLLECTED IN THE STORM SEWER DRAINAGE SYSTEMS IN CONJUNCTION WITH THE STABILIZATION OF THE SITE.

Q. ON-SITE & OFFSITE SOIL STOCKPILE AND BORROW AREAS SHALL BE PROTECTED FROM EROSION AND SEDIMENTATION THROUGH IMPLEMENTATION OF BEST MANAGEMENT PRACTICES. STOCKPILE AND BORROW AREA LOCATIONS SHALL BE NOTED ON THE SITE PLAN AND PERMITTED IN ACCORDANCE WITH GENERAL PERMIT REQUIREMENTS.

R. SLOPES SHALL BE LEFT IN A ROUGHENED CONDITION DURING THE GRADING PHASE TO REDUCE RUNOFF VELOCITIES AND EROSION.

S. DUE TO THE GRADE CHANGES DURING THE DEVELOPMENT OF THE PROJECT, THE CONTRACTOR SHALL BE RESPONSIBLE FOR ADJUSTING THE EROSION CONTROL MEASURES (SILT FENCES, STRAW BALES, ETC.) TO PREVENT EROSION.

T. ALL CONSTRUCTION SHALL BE STABILIZED AT THE END OF EACH WORKING DAY, THIS INCLUDES BACKFILLING OF TRENCHES FOR UTILITY CONSTRUCTION AND PLACEMENT OF GRAVEL OR BITUMINOUS PAVING FOR ROAD CONSTRUCTION.

U. A 3' STRIP OF SOD SHALL BE PLACED ALONG THE EDGE OF ALL PAVING TO ACT AS A SEDIMENT BUFFER AND AID IN THE ESTABLISHMENT OF VEGETATION.

LEGEND

BOUNDARY LINE
RIGHT OF WAY LINE
EASEMENT LINE
EXISTING CONCRETE CURB AND GUTTER
PROPOSED CONCRETE CURB AND GUTTER
PROPOSED FIRE LANE STRIPING
OHE — OVERHEAD ELECTRIC
UGE — UNDERGROUND ELECTRIC
GAS — GAS LINE
UGT — UNDERGROUND TELEPHONE
FO — UNDERGROUND FIBER OPTIC
SS — SANITARY SEWER
8"W — WATERLINE
BENCHMARK

FIRE HYDRANT	EX. POWER POLE
WATER VALVE	PROP. POWER POLE
WMP EX. WATER METER PIT	TPD EX. TELEPHONE PED.
EX. WATER METER	EX. TELEPHONE MANHOLE
PROP. WATER METER	TSL EX. TRAFFIC SIGNAL LIGHT
SCV EX. SPRINKLER VALVE	TCB EX. TRAFFIC CONTROL BOX
AS EX. AUTO SPRINKLER	FP EX. FLAG POLE
EPD EX. ELECT. PEDESTAL	YL EX. YARD LIGHT
ET EX. ELECT. TRANSFORMER	EX. GREASE TRAP
EM EX. ELECT. METER	EX. SS MANHOLE
PROP. ELECT. METER	PROP. SS MANHOLE
AC EX. AIR CONDITIONER	EX. GAS METER
EX. SIGNAGE	PROP. GAS METER
EX. LIGHT POLE	EX. ELECT. MANHOLE
PROP. LIGHT POLE	EX. STORM MANHOLE
GP EX. BOLLARD	

PROP. INLETS (SEE GRADING PLAN FOR TYPE)
LIMITS OF DISTURBANCE
SF — SILT FENCE
TD-->> TEMPORARY DIVERSION DIKE
SODDING
INLET PROTECTION
CW CONCRETE WASHOUT AREA

SEQUENCE OF CONSTRUCTION

PHASE 1

1. A PRE-CONSTRUCTION MEETING SHALL BE HELD BY THE GENERAL CONTRACTOR'S MANAGER, AND THE OPERATOR'S ENGINEER PRIOR TO LAND DISTURBING ACTIVITIES.
2. PREPARE AND PULL ALL NECESSARY PERMITS.
3. CONSTRUCT TEMPORARY CONSTRUCTION EXITS AT LOCATIONS SHOWN ON THE SWPPP PLANS AND PREPARE TEMPORARY PARKING AND STORAGE AREA. UPON IMPLEMENTATION AND INSTALLATION OF THE FOLLOWING AREAS: TRAILER, PARKING, LAY DOWN, PORTA-POTTY, WELL WASH, CONCRETE WASHOUT, MASONS AREA, FUEL AND MATERIAL STORAGE CONTAINERS, SOLID WASTE CONTAINERS, ETC., DENOTE THEM ON THE SITE MAPS IMMEDIATELY AND NOTE ANY CHANGE IN THE LOCATIONS AS THEY OCCUR THROUGHOUT THE CONSTRUCTION PROCESS.
4. CONSTRUCT THE SILT FENCES ON THE SITE. HALT ALL ACTIVITIES AND CONTACT THE CIVIL ENGINEERING CONSULTANT TO PERFORM INSPECTION AND CERTIFICATION OF BMP'S. GENERAL CONTRACTOR SHALL SCHEDULE AND CONDUCT STORMWATER PRE-CONSTRUCTION MEETING WITH ENGINEER AND ALL GROUND-DISTURBING CONTRACTORS BEFORE PROCEEDING WITH CONSTRUCTION.
5. INSTALL PUBLIC WATER, SEWER AND BOX CULVERT
6. DEMO, CLEAR AND GRUB THE SITE.
7. BEGIN GRADING THE SITE.
8. START CONSTRUCTION OF BUILDING PAD AND STRUCTURES.
9. DISTURBED AREAS OF THE SITE WHERE CONSTRUCTION ACTIVITY HAS CEASED FOR MORE THAN 14 DAYS SHALL BE TEMPORARILY SEEDED AND WATERED.

PHASE 2

1. INSTALL UTILITIES, UNDER DRAINS, STORM SEWERS, CURB AND GUTTERS.
2. INSTALL INLET PROTECTION DEVICES.
3. INSTALL RIP RAP AROUND OUTLET STRUCTURES.
4. FINALIZE PAVEMENT SUBGRADE PREPARATION.
5. INSTALL BASE MATERIAL AS REQUIRED FOR PAVEMENT.
6. PAVE LOT.
7. REMOVE TEMPORARY CONSTRUCTION EXITS ONLY PRIOR TO PAVEMENT CONSTRUCTION IN THESE AREAS. (THESE AREAS TO BE PAVED LAST)
8. DISTURBED AREAS OF THE SITE WHERE CONSTRUCTION ACTIVITY HAS CEASED FOR MORE THAN 14 DAYS SHALL BE TEMPORARILY SEEDED AND WATERED.
9. FINE GRADE AND INSTALL PERMANENT SEEDING AND PLANTINGS.
10. REMOVE ALL TEMPORARY EROSION AND SEDIMENT CONTROLS DEVISED. (ONLY IF SITE IS STABILIZED)
11. REMOVE INLET PROTECTIONS AROUND INLETS AND MANHOLES NO MORE THAN 48 HOURS PRIOR TO PLACING STABILIZED BASE COURSE.

CEDAR CREEK
ENGINEERING • PLANNING • CONSULTING
P.O. Box 14534 Oklahoma City, OK 73113
405-778-3385
www.cedarcreekinc.com
OK CA 5864
EXP. 06/30/24

LOCATION MAP:

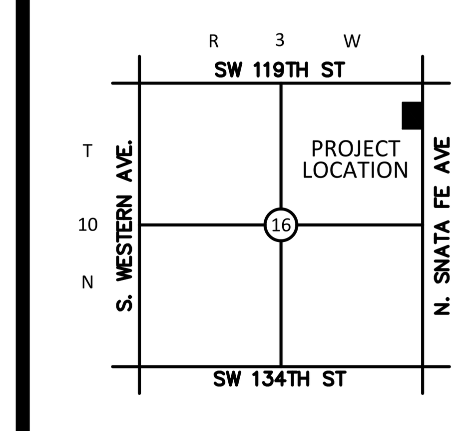

NOT TO SCALE

PROJECT:

HIGHLAND WEST JR. HIGH

MOORE, OK

PROJECT NUMBER: 23069
DRAWING DATE: 07.26.23
ISSUE DATE: 07.26.23

SEAL:

LICENSED PROFESSIONAL ENGINEER ANDREW WILSON 24273 OKLAHOMA 7.26.23

SUBMITTAL:

PERMIT SET

REVISIONS:

MARK	DATE	DESCRIPTION

THESE PLANS AND DRAWINGS ARE NOT TO BE REPRODUCED, CHANGED OR COPIED IN ANY FORM OR MANNER WHATSOEVER WITHOUT FIRST OBTAINING THE WRITTEN PERMISSION AND CONSENT OF CEDAR CREEK CONSULTING INC. THIS SHEET IS NOT TO BE USED FOR CONSTRUCTION UNLESS THE ISSUE DATE IN THE TITLE BLOCK COINCIDES WITH OR POST DATES THE DRAWING DATE. ANY CHANGES MADE FROM THESE PLANS WITHOUT CONSENT OF CEDAR CREEK CONSULTING INC. ARE UNAUTHORIZED, AND SHALL RELIEVE CEDAR CREEK CONSULTING OF RESPONSIBILITY FOR ALL CONSEQUENCES ARRIVING OUT OF SUCH CHANGES.

DRAWING TITLE:

EROSION CONTROL PLAN

SHEET:

C5.00

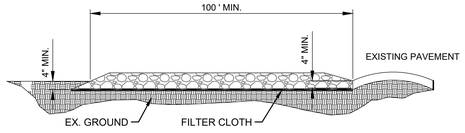

SIDE ELEVATION

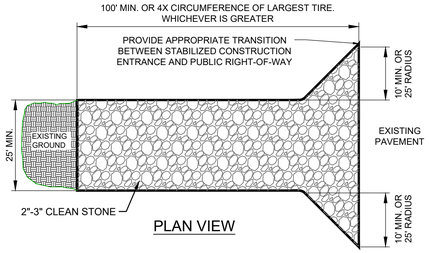

PLAN VIEW

NOTES:
1. STONE - USE COARSE AGGREGATE (2 - 3 INCH STONE)
2. LENGTH - AS EFFECTIVE, BUT NOT LESS THAN 100 FEET.
3. THICKNESS - NOT LESS THAN EIGHT (8) INCHES.
4. WIDTH - NOT LESS THAN FULL WIDTH OF ALL POINTS OF INGRESS OR EGRESS.
5. WASHING - WHEN NECESSARY, WHEELS SHALL BE CLEANED TO REMOVE SEDIMENT PRIOR TO ENTRANCE ONTO PUBLIC RIGHT-OF-WAY. WHEN WASHING IS REQUIRED, IT SHALL BE DONE ON AN AREA STABILIZED WITH CRUSHED STONE WHICH DRAINS INTO AN APPROVED SEDIMENT TRAP OR SEDIMENT BASIN. ALL SEDIMENT SHALL BE PREVENTED FROM ENTERING ANY STORM DRAIN, DITCH, OR WATERCOURSE THROUGH USE OF SAND BAGS, GRAVEL, BOARDS OR OTHER APPROVED METHODS.
6. MAINTENANCE - THE ENTRANCE SHALL BE MAINTAINED IN A CONDITION WHICH WILL PREVENT TRACKING OR FLOWING OF SEDIMENT ONTO PUBLIC RIGHT-OF-WAY. THIS MAY REQUIRE PERIODIC TOP DRESSING WITH ADDITIONAL STONE AS CONDITIONS DEMAND AND REPAIR AND/OR CLEANOUT OF ANY MEASURES USED TO TRAP SEDIMENT. ALL SEDIMENT SPILLED, DROPPED, WASHED OR TRACKED ONTO PUBLIC RIGHTS-OF-WAY MUST BE REMOVED IMMEDIATELY.
7. 12' X 24' METAL GRATE MAY BE USED. GRATE SHALL BE 25' AWAY FROM PAVEMENT AND APPROPRIATE SEDIMENT CONTROL TRAPPING DEVICE SHALL BE USED AT GRATE OUTLET POINT.

STABILIZED CONSTRUCTION ENTRANCE

NOT TO SCALE

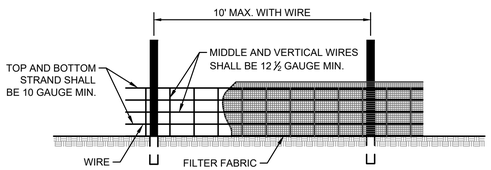

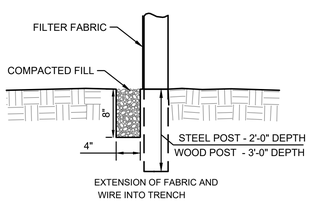

NOTES:

1. WIRE SHALL BE A MINIMUM OF 32" IN WIDTH AND SHALL HAVE A MINIMUM OF 6 LINE WIRES WITH 12" STAY SPACING.
2. FILTER FABRIC SHALL BE A MINIMUM OF 36" IN WIDTH AND SHALL BE FASTENED ADEQUATELY TO THE WIRE.
3. STEEL POST SHALL BE 5'-0" IN HEIGHT AND BE OF THE SELF-FASTENER ANGLE STEEL TYPE.
4. WOOD POST SHALL BE 6'-0" IN HEIGHT AND 3" IN DIAMETER.

SILT FENCE DETAIL

NOT TO SCALE

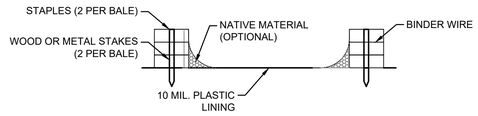

SECTION B-B

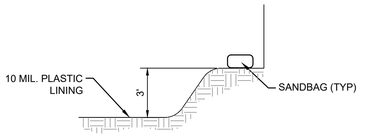

SECTION A-A

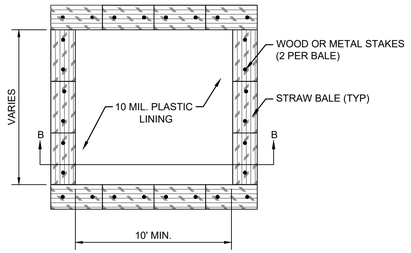

TYPE 'ABOVE GRADE' WITH STRAW BALES

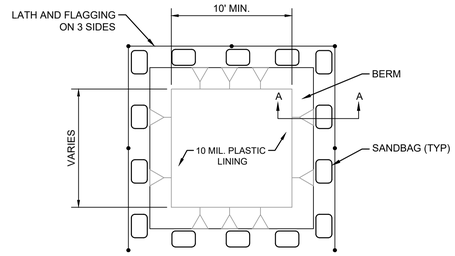

TYPE 'BELOW GRADE'

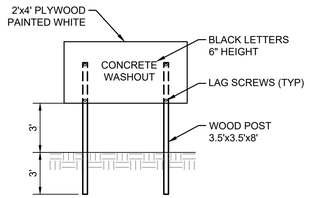

CONCRETE WASHOUT SIGN DETAIL

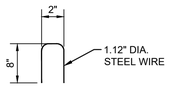

STAPLE DETAIL

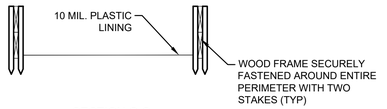

SECTION C-C

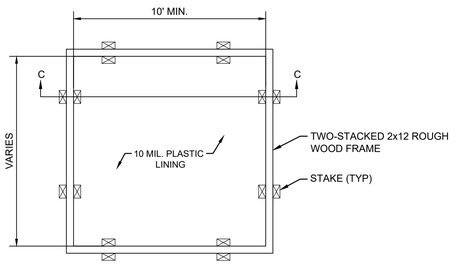

TYPE 'ABOVE GRADE' WITH WOOD PLANKS

NOTES:
1. ACTUAL LAYOUT TO BE DETERMINED IN THE FIELD.
2. A CONCRETE WASHOUT SIGN SHALL BE INSTALLED WITHIN 30' OF THE TEMPORARY CONCRETE WASHOUT FACILITY
3. MATERIALS USED TO CONSTRUCT TEMPORARY CONCRETE WASHOUT FACILITIES SHALL BE REMOVED FROM THE SITE OF THE WORK AND DISPOSED OF OR RECYCLED.
4. HOLES, DEPRESSIONS OR OTHER GROUND DISTURBANCE CAUSE BY THE REMOVAL OF THE TEMPORARY CONCRETE WASHOUT FACILITIES SHALL BE BACKFILLED, REPAIRED AND STABILIZED TO PREVENT EROSION.

CONCRETE WASHOUT DETAIL

NOT TO SCALE

CEDAR CREEK
ENGINEERING • PLANNING • CONSULTING
P.O. Box 14534 Oklahoma City, OK 73113
405-778-3385
www.cedarcreekinc.com
OK CA 5864
EXP. 06/30/24

LOCATION MAP:

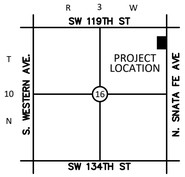

NOT TO SCALE

PROJECT:

HIGHLAND WEST JR. HIGH

MOORE, OK

PROJECT NUMBER:	23069
DRAWING DATE:	07.26.23
ISSUE DATE:	07.26.23

SEAL:

LICENSED PROFESSIONAL ENGINEER
ANDREW WILSON
24273
OKLAHOMA
7.26.23

SUBMITTAL:

PERMIT SET

REVISIONS:

MARK	DATE	DESCRIPTION

THESE PLANS AND DRAWINGS ARE NOT TO BE REPRODUCED, CHANGED OR COPIED IN ANY FORM OR MANNER WHATSOEVER WITHOUT FIRST OBTAINING THE WRITTEN PERMISSION AND CONSENT OF CEDAR CREEK CONSULTING INC. THIS SHEET IS NOT TO BE USED FOR CONSTRUCTION UNLESS THE ISSUE DATE IN THE TITLE BLOCK COINCIDES WITH OR POST DATES THE DRAWING DATE. ANY CHANGES MADE FROM THESE PLANS WITHOUT CONSENT OF CEDAR CREEK CONSULTING INC. ARE UNAUTHORIZED, AND SHALL RELIEVE CEDAR CREEK CONSULTING OF RESPONSIBILITY FOR ALL CONSEQUENCES ARRIVING OUT OF SUCH CHANGES.

DRAWING TITLE:

EROSION CONTROL DETAILS

SHEET:

C5.01

Attachment "C" - 2017 OKR10 Permit

Contractor to insert OKR 10 or write here where kept at site

Attachment "D" - Notice of Intent (NOI)

DEQ Form 606-002A Oct 18, 2017

Oklahoma Department of Environmental Quality
Notice of Intent (NOI)
for Stormwater Discharges Associated with Construction Activity under the OPDES Construction General Permit OKR10

Submission of this NOI constitutes notice that the party identified in Section I of this form intends to be authorized by DEQ for stormwater discharges associated with construction activity on land disturbance of equal to or greater than 1 or more acres, or less than 1 acre of total land area that is part of a larger common plan of development or sale in the State of Oklahoma. Becoming a permittee obligates such discharger to comply with the terms and conditions of the OKR10 permit. To obtain an authorization from DEQ, this form must be complete with all the pertinent information.

All associated fees must be submitted with this NOI. See instructions for completing the NOI on pages 3 and 4 of this form.

☒ NEW APPLICATION, ☐ MODIFICATION or ☐ RENEWAL of current permit, enter the authorization number: OKR10_____

I. Operator Information

Operator Name: Omni Construction, LLC Phone: (405) 735-3992

Mailing Address: PO Box 892245

City: Oklahoma City State: OK Zip Code: 73189

Operator's Point of Contact : Joe Sherga Title: _____

Phone: (405) 735-3992 E-mail: jsherga@coxinet.net

II. Site/Project Information

Site/Project Name: Highland West Jr High Phone: (405) 735-4600

Site/Project Address: 901 N Santa Fe Ave

City: Moore County: Cleveland State: OK Zip Code: 73160

Site/Project's Point of Contact : _____ Title: _____

Phone: _____ E-mail: _____

Site/Project's purpose: ☐ Road/Bridge ☐ Wind Farm ☐ Residential Subdivision ☒ Commercial Building ☐ Others

Latitude: 35°20'43.40"N Longitude: 97°30'46.39"W at the center of the Site/Project or starting and ending points for Linear Project

Latitude: _____ Longitude: _____

Estimated construction start date: 09/01/2023 Estimated construction end date: 09/01/2024

Total area of the construction site: 1.80 (acres) Estimated area to be disturbed: 1.80 (acres)

Current total impervious area: 0.38 (acres) Post-construction total impervious area: 0.85 (acres)

Post –construction runoff coefficient of the site: 0.68 Soil and fill material description: Kirkland-Urban land-Pawhuska

Is this site part of the common plan of development or sales? ☐ Yes ☒ No

Endangered Species Eligibility

a. ☒ My site/project is not located within any of the corridors of Federal and State identified Aquatic Resources of Concern (ARC);

b. ☐ My site/project is located within a corridor of Federal and State identified ARC and I agree to implement the control measures specified in Step 2 of Part 10.2 of the OKR10 permit;

c. ☐ If one of eligibility criteria cannot be met, I may use Addendum H for equivalent sediment controls or contact DEQ at (405)702-8100 for further assistance;

d. ☐ I am required to have an Endangered Species Act Section 7 consultation process and

e. ☐ I am relying on another permittee's certification of eligibility and agree to comply with the conditions of that certification.

III. Site/Project Discharge Information

Does the facility discharge stormwater into a MS4? ☒ Yes ☐ No, If yes, name of the MS4 Operator: Moore

Receiving Water Information (note: use additional sheet of paper if necessary)

Name of the Receiving Waterbody	Is this waterbody impaired? If so, what are its impairments?	Is there a TMDL for that impairment?
Pond Creek-Canadian River	☐ Yes ☒ No	☐ Yes ☒ No
	☐ Yes ☐ No	☐ Yes ☐ No
	☐ Yes ☐ No	☐ Yes ☐ No
	☐ Yes ☐ No	☐ Yes ☐ No

IV. Stormwater Pollution Prevention Plan (SWP3) Information

Has the SWP3 been prepared and available on site? ☒ Yes ☐ No

Is the operator registered for construction activities with the Secretary of State of Oklahoma? ☒ Yes ☐ No

Proposed Best Management Practices to control pollution in the stormwater discharges, check all that apply:

☑ Construction phased	☐ Sediment basin/trap	☑ Mulching/seeding/sodding	☐ Vegetated buffer
☑ Vehicle/concrete wash-out	☑ Site inspection	☐ Diversion dikes	☑ Inlet protection
☑ Construction entrances	☑ Silt fence	☐ Waste management	☐ Stream crossings
☐ Spill prevention/cleanup	☐ Employee training	☐ Compost blanket/geotextiles	☑ Check dams
☑ Construction sequencing	☑ Riprap	☐ Gradient terraces	☐ Silt dikes

Other BMPs: _____

Post-construction Best Management Practices for construction activities, Check all that apply:

☐ Narrow street/turnaround	☑ Wet/dry pond	☐ Protected natural features	☐ Vegetated filter trips
☐ Eliminated curbs & gutters	☐ Wetland	☐ Infiltration basin/trench	☐ Porous pavement
☐ Bio-retention/rain gardens	☐ Riparian	☐ Redevelopment/retrofit	☐ Grassed swales
☐ Low impact development	☐ Green designs	☐ Conservation easements	☐ Retrofit

Other BMPs: _____

V. Certification

I certify under penalty of law that this document and all attachments were prepared under my direction or supervision in accordance with a system designed to assure that qualified personnel properly gathered and evaluated the information submitted. Based on my inquiry of the person or persons who manage the system, or those persons directly responsible for gathering the information, the information submitted is, to the best of my knowledge and belief, true, accurate, and complete. I have no personal knowledge that the information submitted is other than true, accurate, and complete. I am aware that there are significant penalties for submitting false information, including the possibility of fine and imprisonment for knowing violations.

Print Name: _____ Title: _____

Signature: _____ Date: _____

For DEQ use only: Assigned Authorization Number: OKR10_____

Additional 2017 OKR10 Reports Templates

Site Inspection Report

Corrective Action Report

Employee Training Report

SWP3 Modification Log

Site Grading and Stabilization Log

Construction Site Notice Template

Site Inspection Report

Inspection Date: _____

General Information (OKR10 Part 4.3.13.E)	
Name of Project:	**DEQ Permit No.:**
Inspector Name:	**Inspector Title:**
Inspector's Contact Information:	
Inspection Frequency: **Standard Frequency**: ☐ Every 7 days and within 24 hours of a 0.50" rain, or discharge from snowmelt ☐ Every 14 days and within 24 hours of a 0.50" rain, or discharge from snowmelt **Reduced Frequency**: ☐ Once per month (for stabilized areas)	
Weather at the time of this inspection: _____ **Was this inspection after a 0.50" storm event?** ☐ Yes ☐ No, **Total rainfall that triggered the inspection** (in inches)**:**	
Are there any discharges at the time of inspection? ☐ Yes ☐ No	

List all areas where soil stabilization is required to begin because construction work in that area has permanently or temporarily stopped and all areas where stabilization has been implemented:

Stabilization of Exposed Soil (OKR10 Part 4.3.13.D)			
Stabilization Area	**Stabilization Method**	**Have You Initiated Stabilization?**	**Notes** (describe your observation)
		☐ Yes ☐ No If yes, provide date:	
		☐ Yes ☐ No If yes, provide date:	
		☐ Yes ☐ No If yes, provide date:	
		☐ Yes ☐ No If yes, provide date:	
		☐ Yes ☐ No If yes, provide date:	

(Notes: *For each area where stabilization has been initiated, describe the progress that has been made, and what additional actions are necessary to complete stabilization. Note the effectiveness of stabilization in preventing erosion. If stabilization has been initiated but not completed, make a note of the date it is to be completed. If stabilization has been completed, make a note of the date it was completed. If stabilization has not yet been initiated, make a note of the date it is to be initiated, and the date it is to be completed.)*

Provide a list/description of all structural and non-structural BMPs that your SWP3 indicates will be installed and implemented at your site. You must separately identify the **location** of each control. During Inspection, identify whether they are **installed and operating properly**, or any **corrective action** is necessary. Provide the **date** on which the condition that triggered the need for maintenance or corrective action was first identified. In the notes section you must describe the **specifics about the problem** you observed.

Condition and Effectiveness of BMP Controls & Pollution Prevention (OKR10 Part 3.3, 4 & 5)					
No.	**BMP Description & Location**	**Is BMP Installed & Operating Properly?**	**Corrective Action (CA) Required?**	**Date on Which Maintenance or CA First Identified?**	**Notes** (describe if you observed any problem)
1.	Silt Fence/Fiber Rolls/Berm/Wattles Location:	☐ Yes ☐ No	☐ Yes ☐ No		
2.	Silt Dikes/Check Dams/Rock Dams Location:	☐ Yes ☐ No	☐ Yes ☐ No		
3.	Stabilized Construction Entrance/Exit Location:	☐ Yes ☐ No	☐ Yes ☐ No		
4.	Inlet Protection on all storm drain Location:	☐ Yes ☐ No	☐ Yes ☐ No		
5.	Sand Bag Barrier/Gravel Bag Barrier Location:	☐ Yes ☐ No	☐ Yes ☐ No		
6.	Vegetated Swales Location:	☐ Yes ☐ No	☐ Yes ☐ No		
7.	Compost Blankets/Geotextiles/Mats Location:	☐ Yes ☐ No	☐ Yes ☐ No		
8.	Vegetative Buffers Location:	☐ Yes ☐ No	☐ Yes ☐ No		
9.	Sediment Trap/ Sediment Basin Location:	☐ Yes ☐ No	☐ Yes ☐ No		
10.	Concrete Washout Pit Location:	☐ Yes ☐ No	☐ Yes ☐ No		
11.	Dust Control/Prevention	☐ Yes ☐ No	☐ Yes ☐ No		
12.		☐ Yes ☐ No	☐ Yes ☐ No		
13.		☐ Yes ☐ No	☐ Yes ☐ No		
14.		☐ Yes ☐ No	☐ Yes ☐ No		
15.		☐ Yes ☐ No	☐ Yes ☐ No		
16.		☐ Yes ☐ No	☐ Yes ☐ No		

(**Note:** *The permit differentiates between conditions requiring repairs and maintenance, and those requiring corrective action. The permit requires maintenance in order to keep controls in effective operating condition and requires repairs if controls are not operating as intended. Corrective actions are triggered only for specific, more serious conditions – whether a required stormwater control was never installed, or was installed incorrectly, or not installed in accordance with the requirements of OKR10*)

Pollution Prevention and Waste Management (OKR10 Part 3.3.3)		
Items of Inspection	**Response & Reason**	**Action(s) Needed**
Is the site free of floatables, litter, and construction debris?	☐ Yes ☐ No If no, reason:	
Are material storage and handling areas, including fueling areas, free of spills and leaks?	☐ Yes ☐ No If no, reason:	
Are spill kits available where spills and leaks are likely to occur?	☐ Yes ☐ No If no, reason:	
Are dumpsters and waste receptacles covered when not in use?	☐ Yes ☐ No If no, reason:	
Has preventative maintenance been conducted on equipment and machinery?	☐ Yes ☐ No If no, reason:	
Are material stockpiles sufficiently contained?	☐ Yes ☐ No If no, reason:	
Has there been any sediment tracked-out from the site onto the surface of paved street, sidewalks or other paved areas outside of the site?	☐ Yes ☐ No If no, reason:	
Is the project free from visible erosion and/or sedimentation?	☐ Yes ☐ No If no, reason:	

Complete the following section if a discharge is occurring at the time of inspection:

Description of Discharges (OKR10 Part 4.3.13.D.2.f)	
Was a stormwater discharge or other discharge occurring from any part of your site at the time of the inspection? ☐ Yes ☐ No, **If yes, provide the following information for each point of discharge:**	
Specify Discharge Location	**Observations (Visual Quality of the Discharge)**
1.	Describe the discharge (color, odor, floating, settled/suspended solids, foam, & oil sheen): Are there any visible signs of erosion and/or sediment accumulation that can be attributed to your discharge? ☐ Yes ☐ No, If yes, describe what you see, specify the location(s) where these conditions were found, and indicate whether modification, maintenance, or corrective action is needed to resolve the issue:
2.	Describe the discharge (color, odor, floating, settled/suspended solids, foam, & oil sheen): Are there any visible signs of erosion and/or sediment accumulation that can be attributed to your discharge? ☐ Yes ☐ No, If yes, describe what you see, specify the location(s) where these conditions were found, and indicate whether modification, maintenance, or corrective action is needed to resolve the issue:

Contractor or Subcontractor Certification and Signature:

I certify under penalty of law that this document and all attachments were prepared under my direction or supervision in accordance with a system designed to assure that qualified personnel properly gathered and evaluated the information submitted. Based on my inquiry of the person or persons who manage the system, or those persons directly responsible for gathering the information, the information submitted is, to the best of my knowledge and belief, true, accurate, and complete. I am aware that there are significant penalties for submitting false information, including the possibility of fine and imprisonment for knowing violations.

Signature:_____ **Date:** _____

Print Name: _____ **Affiliation:** _____

Corrective Action Report

Today's Date:_____

(You are only required to fill out this form if any of the corrective action triggering conditions occurs on your site. Routine maintenance and repairs are generally not considered to be a corrective action triggering condition.)

Section A: Initial Report (Part 4.3.14.B.1 of OKR10) (Complete this section within **24 hours** of discovering the condition that triggered corrective action)	
Name of Project:	**DEQ's Permit No.** OKR10
Date Problem First Discovered:	**Time Problem First Discovered:**
Name & Contact Information of the Individual:	
What site conditions triggered the requirement to conduct corrective action *(check the box that applies)*: ☐ A required stormwater control was never installed or was installed incorrectly, or not in accordance with the corresponding OKR10 permit requirement ☐ A stormwater control is not effective enough for the discharge to meet applicable water quality standards ☐ A prohibited discharge (OKR10 Parts 3.1 and 3.3.3.A) is occurring or has occurred. ☐ DEQ requires corrective action as a result of permit violations found during an DEQ inspection	
Provide a description of the problem:	
Deadline for completing corrective action:	***not more than 7 calendar days after the date you discovered the problem***

Section B: Corrective Action Progress (Part 4.3.14.B.2 of OKR10) (Complete this section no later than **7 calendar days** after discovering the condition that triggered corrective action)			
Section B.1: Why the Problem Occurred			
Cause(s) of Problem	**How It Was Determined & Date of Determining the Cause**		
1.	1.		
2.	2.		
Section B.2: Stormwater Control Modifications to be Implemented to Correct the Problem			
Stormwater Control Modification(s) Needed to Correct Problem	**Date of Completion**	**SWP3 Update Necessary?**	**SWP3 Modifications Notes**
1.		☐Yes ☐ No, If yes, provide date SWP3 modified:	
2.		☐ Yes ☐ No, If yes, provide date SWP3 modified:	

Section C: Certification and Signature by Permittee

I certify under penalty of law that this document and all attachments were prepared under my direction or supervision in accordance with a system designed to assure that qualified personnel properly gathered and evaluated the information submitted. Based on my inquiry of the person or persons who manage the system, or those persons directly responsible for gathering the information, the information submitted is, to the best of my knowledge and belief, true, accurate, and complete. I am aware that there are significant penalties for submitting false information, including the possibility of fine and imprisonment for knowing violations.

Name: _____ **Title:** _____

Signature: _____ **Date:** _____

SWP3 Employee Training Report

Project Name: _____ **DEQ Authorization No. OKR10**_____

Instructor's Name:_____ **Instructor's Title:** _____

Course Location: _____ **Date:** _____

Course Length (hours): _____

Stormwater Training Topic: *(check as appropriate)*

- ☐ **Overview of SWP3**
- ☐ **Erosion & Sediment Controls Installation**
- ☐ **Erosion & Sediment Controls Maintenance**
- ☐ **Spill Prevention & Response**
- ☐ **Temporary & Permanent Stabilization**
- ☐ **Good Housekeeping**
- ☐ **Inspections and Corrective Actions**
- ☐ **Emergency Procedures**

Specific Training Objective:_____

_____

Attendee Roster: *(attach additional pages as necessary)*

No.	Name of Attendee	Signature of the Attendees	Date
1.			
2.			
3.			
4.			
5.			
6.			
7.			
8.			
9.			
10.			
11.			
12.			

SWP3 Modification Log

No.	Description of the Modification	Date of Modification	Modification Prepared by [Name(s) and Title]	Signature by Designated Corporate Official
1.				
2.				
3.				
4.				
5.				
6.				
7.				
8.				
9.				
10.				

Grading and Stabilization Activities Log

Date Grading Initiated	**Description of Grading Activity**	**Description of Stabilization Measure and Location**	**Date Grading Activity Ceased** (Temporary or Permanent)	**Date When Stabilization Initiated**

CONSTRUCTION SITE NOTICE

FOR THE
NPDES GENERAL PERMIT

Contractor Firm:	
Contractor Address:	
Contact Name & Number:	_____ _____ Name Phone Number
Project Description:	

DIVISION 2 - SITE WORK

SECTION 02110 - TEMPORARY CONSTRUCTION FENCING

Part 1 - General

1.01 Summary

A. Section includes: Erection, maintenance and dismantling of temporary fencing around construction site and materials storage areas. This section does not apply where security fencing is required.

B. Refer to Drawings for temporary fencing layout and location of gates.

1.02 Submittals

A. Submit the following:

1. Shop drawing indicating layout of temporary fencing, location and size of gates, existing pavement and roads, access to fire hydrants and hose connections, and other site specific conditions. Prepare drawing after site observation and verification of existing conditions.

Part 2 - Products

2.01 Temporary Chain Link fencing:

A. Unless otherwise indicated, type of temporary chain link fencing shall be Contractor's option. Following types are acceptable:

1. New materials or previously used salvaged chain link fencing in good condition.
2. Posts: Galvanized steel pipe of diameter to provide rigidity. Post shall be suitable for setting in concrete footings, driving into ground, anchoring with base plates, or inserting in precast concrete blocks.
3. Fabric: Woven galvanized steel wire mesh. Provide in continuous lengths to be wire tied to fence posts or prefabricated into modular pipe-framed fence panels.
4. Height: Minimum Height shall be 8'-0".

B. Gates: Provide personnel and vehicle gates of the quantity and size indicated on the Drawings or required for functional access to site.

1. Fabricate of same material as used for fencing.
2. Vehicle gates:
   a. Minimum width: 20 feet to allow access for emergency vehicles.
   b. Capable of manual operation by one person.

Part 3 - Execution:

3.01 Layout:

A. Installation of temporary fencing shall not deter or hinder

access to existing and new hose connections and fire hydrants.
1. Maintain 3 feet diameter clear space around fire hydrants.
2. Where fire hydrant or hose connection is blocked by fencing, provide access gate.

B. Access: Provide gates for personnel, delivery of materials, and access by emergency vehicles.

3.02 Installation:

A. Chain link posts:
1. Space at 10'-0" maximum.
2. Drive posts, set in holes and backfill, or anchor in precast concrete blocks.
3. For soft and unstable ground conditions, cast concrete plug around post.
4. Posts over pavement: Use steel post plates or precast concrete blocks.
5. Gate posts: Use bracing or concrete footings to provide rigidity for accommodating size of gate.

B. Fabric: Securely attach to posts.

C. Gates: Install with required hardware.

D. Plastic mesh fencing: Space steel support posts to ensure mesh remains vertical and at proper height. Securely tie mesh to posts.

3.03 Maintenance and Removal:

A. Maintain fencing in good condition. If damaged, immediately repair.

B. Remove temporary fencing upon completion of Work or when no longer required for security or control. Backfill holes and compact. Holes in pavement shall be surfaced to match existing paving. Repair damage caused by installation of temporary fencing.

End of Section

DIVISION 3 – CONCRETE

SECTION 03300 – CAST-IN-PLACE CONCRETE

PART 1 – GENERAL

1.01 Section Includes
- A. Concrete formwork.
- B. Slabs on grade.
- C. Concrete foundation walls and retaining walls.
- D. Concrete reinforcement.
- E. Joint devices associated with concrete work.
- F. Miscellaneous concrete elements, including equipment pads and equipment pits.
- G. Concrete curing.

1.02 Related Requirements
- A. See Section 01 3000 – Administrative Requirements, for submittal procedures.
- B. Section 07 9200 – Joint Sealants: Products and installation for sealants and joint fillers for saw cut joints, construction joints and isolation joints in slabs.

1.03 Reference Standards
- A. For all reference standards listed below, comply with the version year in the governing building code adopted by the Authority Having Jurisdiction. For those reference standards that are not directly referenced by the building code, use the latest edition unless noted otherwise.
- B. ACI 117 – Specifications for Tolerances for Concrete Construction and Materials.
- C. ACI 211.1 – Standard Practice for Selecting Proportions for Normal, Heavyweight, and Mass Concrete.
- D. ACI 301 – Specifications for Structural Concrete.
- E. ACI 302.1R – Guide to Concrete Floor and Slab Construction.
- F. ACI 302.2R – Guide for Concrete Slabs that Receive Moisture-Sensitive Flooring Materials.
- G. ACI 304R – Guide for Measuring, Mixing, Transporting, and Placing Concrete.
- H. ACI 305R – Guide to Hot Weather Concreting.
- I. ACI 305.1 – Specification for Hot Weather Concreting.
- J. ACI 306R – Guide to Cold Weather Concreting.
- K. ACI 308R – Guide to External Curing of Concrete.
- L. ACI 318 – Building Code Requirements for Structural Concrete and Commentary.
- M. ACI 347R – Guide to Formwork for Concrete.
- N. ACI SP-66 – ACI Detailing Manual.
- O. ASTM A615/A615M – Standard Specification for Deformed and Plain Carbon-Steel Bars for Concrete Reinforcement.
- P. ASTM A706/A706M – Standard Specification for Deformed and Plain Low-Alloy Steel Bars for Concrete Reinforcement.

Q. ASTM A1064/A1064M – Standard Specification for Carbon-Steel Wire and Welded Wire Reinforcement, Plain and Deformed, for Concrete.
R. ASTM C33/C33M – Standard Specification for Concrete Aggregates.
S. ASTM C39/C39M – Standard Test Method for Compressive Strength of Cylindrical Concrete Specimens.
T. ASTM C94/C94M – Standard Specification for Ready-Mixed Concrete.
U. ASTM C143/C143M – Standard Test Method for Slump of Hydraulic-Cement Concrete.
V. ASTM C150/C150M – Standard Specification for Portland Cement.
W. ASTM C171 – Standard Specification for Sheet Materials for Curing Concrete.
X. ASTM C173/C173M – Standard Test Method for Air Content of Freshly Mixed Concrete by the Volumetric Method.
Y. ASTM C260/C260M – Standard Specification for Air-Entraining Admixtures for Concrete.
Z. ASTM C494/C494M – Standard Specification for Chemical Admixtures for Concrete.
AA. ASTM C618 – Standard Specification for Coal Fly Ash and Raw or Calcined Natural Pozzolan for Use in Concrete.
AB. ASTM C1064/C1064M – Standard Test Method for Temperature of Freshly Mixed Hydraulic-Cement Concrete.
AC. ASTM C1107/C1107M – Standard Specification for Packaged Dry, Hydraulic-Cement Grout (Nonshrink).
AD. ASTM C1602/C1602M – Standard Specification for Mixing Water Used in the Production of Hydraulic Cement Concrete.
AE. ASTM D1751 – Standard Specification for Preformed Expansion Joint Filler for Concrete Paving and Structural Construction (Nonextruding and Resilient Bituminous Types).
AF. ASTM D2103 – Standard Specification for Polyethylene Film and Sheeting.
AG. ASTM E1745 – Standard Specification for Plastic Water Vapor Retarders Used in Contact with Soil or Granular Fill under Concrete Slabs.
AH. CRSI (DA4) – Manual of Standard Practice.
AI. ICC (IBC)-2015 – International Building Code.

1.04 Definitions

A. Cold Weather: A period when for more than three successive days the average daily outdoor temperature drops below 40 F. The average daily temperature is the average of the highest and lowest temperature during the period from midnight to midnight. When temperatures above 50 F occur during more than half of any 24 hr duration, the period shall no longer be regarded as cold weather.

B. Hot Weather: Hot weather is any combination of the following conditions that tends to impair the quality of freshly mixed or hardened concrete by accelerating the rate of moisture loss and rate of cement hydration, or otherwise causing detrimental results:
   1. High ambient temperature
   2. High concrete temperature
   3. Low relative humidity
   4. Wind speed
   5. Solar radiation

1.05 Submittals

A. See Section 01 3000 – Administrative Requirements, for submittal procedures.

B. Product Data: Submit manufacturers' data on manufactured products showing compliance with specified requirements and installation instructions.

C. Mix Design: Submit proposed concrete mix design.
   1. Indicate proposed mix design complies with requirements of ACI 301, Section 4 – Concrete Mixtures.
   2. Indicate proposed mix design complies with requirements of ACI 318, Chapter 26 – Concrete Documents and Inspection.

D. Shop Drawings: Comply with requirements of ACI SP-66. Include bar schedules, shapes of bent bars, spacing of bars, and location of splices.

E. Test Reports: Submit report for each test or series of tests specified.

F. Manufacturer's Installation Instructions: For concrete accessories, indicate installation procedures and interface required with adjacent construction.

G. Formwork Design Submittal: As required by authorities having jurisdiction.

H. Project Record Documents: Accurately record actual locations of embedded utilities and components that will be concealed from view upon completion of concrete work.

I. Warranty: Submit manufacturer warranty and ensure forms have been completed in Owner's name and registered with manufacturer.

1.06 Quality Assurance

A. Perform work of this section in accordance with ACI 301 and ACI 318.

B. Follow recommendations of ACI 305R when concreting during hot weather.

C. Follow recommendations of ACI 306R when concreting during cold weather.

D. For slabs required to include moisture vapor reducing admixture (MVRA), do not proceed with placement unless manufacturer's representative is present for placement as required by the manufacturer's warranty.

1.07 Warranty

A. See Section 01 3000 – Administrative Requirements, for submittal procedures.

B. See Section 01 7800 – Closeout Submittals, for additional warranty requirements.

C. Slabs with Moisture Vapor Reducing Admixture (MVRA): Provide warranty to cover cost of flooring failures due to moisture migration from slabs for life of the concrete.

1. Include cost of repair or removal of failed flooring, placement of topical moisture remediation system, and replacement of flooring with comparable flooring system.
2. Provide warranty by manufacturer of MVRA matching terms of flooring adhesive or primer manufacturer's material defect warranty.

PART 2 PRODUCTS

2.01 Formwork

A. Formwork Design and Construction: Comply with guidelines of ACI 347R to provide formwork that will produce concrete complying with tolerances of ACI 117.

B. Form Materials: Contractor's choice of standard products with sufficient strength to withstand hydrostatic head without distortion in excess of permitted tolerances.

1. Form Facing for Exposed Finish Concrete: Contractor's choice of materials that will provide smooth, stain-free final appearance.
2. Earth Cuts: Do not use earth cuts as forms for vertical surfaces of trenched footings unless expressly allowed in the General Notes in the structural drawings. Natural rock formations that maintain a stable vertical edge may be used as side forms for below-grade concrete.
3. Form Coating: Release agent that will not adversely affect concrete or interfere with application of coatings.
4. Form Ties: Cone snap type that will leave no metal within the clear cover zone of the concrete surface as specified in the Minimum Concrete Cover for Cast-in-Place Non-Prestressed Members table included in the General Notes of the structural drawings.

2.02 Reinforcement Materials

A. Reinforcing Steel: ASTM A615/A615M, Grade 60 (60,000 psi).
   1. Type: Deformed billet-steel bars.
   2. Finish: Unfinished, unless otherwise indicated.

B. Reinforcing Steel: ASTM A706/A706M, deformed low-alloy steel bars, weldable.
   1. Unfinished.

C. Reinforcement Accessories:
   1. Joint Dowel Bars: ASTM A615/A615M, Grade 60 (60,000 psi) plain-steel bars, cut true to length with ends square and free of burrs.
   2. Tie Wire: Annealed, minimum 16 gauge, 0.0508 inch.
   3. Chairs, Bolsters, Bar Supports, Spacers: Sized and shaped for adequate support of reinforcement during concrete placement.
      a. Continuous slab bolsters shall be used to support the bottom reinforcing bars of all reinforced slabs-on-grade.
   4. Provide stainless steel, galvanized, plastic, or plastic coated steel components for placement of reinforcing steel within 1-1/2 inches of weathering surfaces and for concrete surfaces that will be exposed to view.

D. Fabrication of Reinforcing:
   1. Fabricate concrete reinforcing in accordance with CRSI (DA4) - Manual of Standard Practice.
   2. Welding of reinforcement is permitted only with the specific approval of Architect/Engineer. Perform welding in accordance with AWS D1.4/D1.4M.
   3. Locate reinforcing splices not indicated on drawings at point of minimum stress.

2.03 Concrete Materials

A. Cement: ASTM C150/C150M, Type I - Normal Portland type.
   1. Acquire cement for entire project from same source.

B. Fine and Coarse Aggregates: ASTM C33/C33M.
   1. Acquire aggregates for entire project from same source.

C. Fly Ash: ASTM C618, Class C or F.

D. Water: ASTM C1602/C1602M; clean, potable, and not detrimental to concrete.

2.04 Admixtures

A. Do not use chemicals that will result in soluble chloride ions in excess of 0.1 percent by weight of cement.

B. Air Entrainment Admixture: ASTM C260/C260M.

C. Water Reducing and Retarding Admixture: ASTM C494/C494M Type D.

D. Water Reducing Admixture: ASTM C494/C494M Type A.

E. Moisture Vapor Reducing Admixture (MVRA): Liquid, inorganic admixture free of volatile organic compounds (VOCs) and formulated to close capillary systems formed during curing to reduce moisture vapor emission and transmission with no adverse effect on concrete properties or finish flooring.
   1. Provide admixture in slabs to receive adhesively applied flooring.
   2. Manufacturers:
      a. Barrier One, Inc; Barrier One Moisture Vapor Reduction Admixture: www.barrierone.com/#sle.
      b. Substitutions: Substitutions shall comply with the use of concrete staining/dye products. See Section 01 6000 – Product Requirements.

2.05 Accessory Materials

A. Non-Shrink Cementitious Grout: Premixed compound consisting of non-metallic aggregate, cement, water reducing and plasticizing agents.
   1. Grout: Comply with ASTM C1107/C1107M.

2.06 Bonding And Jointing Products

A. Latex Bonding Agent: Non-redispersable acrylic latex, complying with ASTM C1059/C1059M, Type II.
B. Epoxy Bonding System:
   1. Complying with ASTM C881/C881M and of Type required for specific application.
C. Waterstops: Bentonite and butyl rubber, complying with NSF 61 and NSF 372.
D. Slab Isolation Joint Filler: 1/2 inch (13 mm) thick, height equal to slab thickness.
   1. Material: ASTM D1751, cellulose fiber.

2.07 Evaporation Retarders

A. Evaporation Retarder: Liquid thin film-forming compound that reduces rapid moisture loss caused by high temperature, low humidity, and high winds; intended for application immediately after concrete placement. These products provide a protective film shield over plastic concrete, dissipate as soon as the concrete is no longer plastic, and are not curing products.
   1. Manufacturers:
      a. Euclid Chemical Company ; EUCOBAR: www.euclidchemical.com/#sle.
      b. SpecChem, LLC; SpecFilm Concentrate or SpecFilm: www.specchemllc.com/#sle.
      c. W. R. Meadows, Inc ; Evapre or Evapre-RTU: www.wrmeadows.com/#sle.
      d. Substitutions: See Section 01 6000 – Product Requirements.

2.08 Curing Materials

A. Moisture-Retaining Sheet: ASTM C171.
   1. Polyethylene film, white opaque, minimum nominal thickness of 4 mil, 0.004 inch.
   2. White-burlap-polyethylene sheet, weighing not less than 3.8 ounces per square yard.

B. Polyethylene Film: ASTM D2103, 4 mil, 0.004 inch thick, clear.

C. Water: Potable, not detrimental to concrete.

2.09 Concrete Mix Design

A. Proportioning Normal Weight Concrete: Comply with ACI 211.1 recommendations.

B. Concrete Strength: Establish required average strength for each type of concrete on the basis of field experience or trial mixtures, as specified in ACI 301.
   1. For trial mixtures method, employ independent testing agency acceptable to Architect for preparing and reporting proposed mix designs.

C. Admixtures: Add acceptable admixtures as recommended in ACI 211.1 and at rates recommended or required by manufacturer.

D. Normal Weight Concrete: Refer Structural General Notes for mix requirements for various classes of concrete.

2.10 Mixing

A. Transit Mixers: Comply with ASTM C94/C94M.

B. Adding Water: If concrete arrives on-site with slump less than suitable for placement, do not add water that exceeds the maximum water-cement ratio or exceeds the maximum permissible slump.

PART 3 EXECUTION

3.01 Examination

A. Verify lines, levels, and dimensions before proceeding with work of this section.

3.02 Preparation

A. Formwork: Comply with requirements of ACI 301. Design and fabricate forms to support all applied loads until concrete is cured, and for easy removal without damage to concrete.

B. Verify that forms are clean and free of rust before applying release agent.

C. Coordinate placement of embedded items with erection of concrete formwork and placement of form accessories.

D. Where new concrete is to be bonded to previously placed concrete, prepare existing surface by cleaning and applying bonding agent according to bonding agent manufacturer's instructions.

1. Use epoxy bonding system for bonding to damp surfaces, for structural load-bearing applications, and where curing under humid conditions is required.
2. Use latex bonding agent only for non-load-bearing applications.

E. Where new concrete with integral waterproofing is to be bonded to previously placed concrete, prepare surfaces to be treated in accordance with waterproofing manufacturer's instructions. Saturate cold joint surface with clean water, and remove excess water before application of coat of waterproofing admixture slurry. Apply slurry coat uniformly with semi-stiff bristle brush at rate recommended by waterproofing manufacturer.

F. In locations where new concrete is doweled to existing work, drill holes in existing concrete, clean out drilled holes, inject the adhesive indicated on drawings and/or General Notes, and insert steel dowels, all in accordance with adhesive manufacturer's installation instructions.

G. Interior Slabs on Grade: Install vapor retarder under interior slabs on grade in accordance with manufacturer's instructions, ASTM E1643, ASTM F710 and ACI 302.2R.

1. Install compactible granular fill before placing vapor retarder as indicated on drawings. Do not use sand.
2. Lap vapor retarder sheet over footings and seal to previously placed concrete foundations.
3. Lap joints minimum 6 inches (150 mm).
4. Seal joints, seams and penetrations watertight with manufacturer's recommended products and follow manufacturer's written instructions.
5. No penetration of vapor retarder is allowed except for reinforcing steel and permanent utilities.
6. Repair damaged vapor retarder before covering with other materials.
7. Vapor Retarder Over Granular Fill: Install compactible granular fill before placing vapor retarder as indicated on drawings. Do not use sand.

3.03 Installing Reinforcement And Other Embedded Items

A. Comply with requirements of ACI 301. Clean reinforcement of loose rust and mill scale, and accurately position, support, and secure in place to achieve not less than minimum concrete coverage required for protection.

B. Install welded wire reinforcement in maximum possible lengths, and offset end laps in both directions. Splice laps with tie wire.

C. Verify that anchors, seats, plates, reinforcement, waterstops and other items to be cast into concrete are

accurately placed, positioned securely, and will not interfere with concrete placement.

3.04 Placing Concrete

A. Place concrete in accordance with ACI 304R.

B. Place concrete for floor slabs in accordance with ACI 302.1R.

C. Notify Architect not less than 48 hours prior to commencement of placement operations.

D. Maintain records of concrete placement. Record date, location, quantity, air temperature, and test samples taken.

E. Ensure reinforcement, inserts, waterstops, embedded parts, and formed construction joint devices will not be disturbed during concrete placement.

F. Place concrete continuously without construction (cold) joints wherever possible; where construction joints are necessary, before next placement prepare joint surface by removing laitance and exposing the sand and sound surface mortar, by sandblasting or high-pressure water jetting.

G. Finish slab-on-grade and shored elevated floors level and flat, unless otherwise indicated, within the tolerances specified below.

3.05 Slab Jointing

A. Locate and install joints as indicated on drawings and Slab-On-Grade Schedule or as submitted by Contractor and approved by structural engineer.

B. Anchor joint fillers and devices to prevent movement during concrete placement.

C. Isolation Joints: Use preformed joint filler, total height equal to thickness of slab, set flush with top of slab.

1. Install wherever necessary to separate slab from other building members, including columns, walls, equipment foundations, footings, stairs, manholes, sumps, and drains.

D. Load Transfer Construction and Contraction Joints: Install load transfer devices as indicated; saw cut joint at surface as indicated for contraction joints.

E. Saw Cut Contraction Joints: Saw cut joints shall be installed with early-entry dry-cut saw before concrete begins to cool, within 1 to 4 hours after completing the slab finishing operations; commence in approximately 1 hours in hot weather or approximately 4 hours in cold weather. Use 3/16 inch thick blade and cut at least 1 inch deep but not less than one quarter (1/4) the depth of the slab. Refer to Slab-On-Grade Schedule in drawings for additional requirements.

3.06 Floor Flatness And Levelness Tolerances

A. An independent testing agency, as specified in Section 01 4000, will inspect finished slabs for compliance with specified tolerances.

B. Maximum Variation of Surface Flatness:

1. Exposed Concrete Floors: 1/4 inch in 10 feet.
2. Under Seamless Resilient Flooring: 1/4 inch in 10 feet.
3. Under Carpeting: 1/4 inch in 10 feet.

C. Correct the slab surface if surface variations exceed specified tolerances.

D. Correct defects by grinding or by removal and replacement of the defective work. Areas requiring corrective work will be identified. Re-measure corrected areas by the same process.

3.07 Concrete Finishing

A. Repair surface defects, including tie holes, immediately after removing formwork.

B. Unexposed Form Finish: Rub down or chip off fins or other raised areas 1/4 inch or more in height.

C. Exposed Form Finish: Rub down or chip off and smooth fins or other raised areas 1/4 inch or more in height. Provide finish as follows:

1. Smooth Rubbed Finish: Wet concrete and rub with carborundum brick or other abrasive, not more than 24 hours after form removal.

D. Concrete Slabs: Finish to requirements of ACI 302.1R, and as follows:

1. Surfaces to Receive Thick Floor Coverings: "Wood float" as described in ACI 302.1R; thick floor coverings include quarry tile, ceramic tile, and Portland cement terrazzo with full bed setting system.
2. Surfaces to Receive Thin Floor Coverings: "Steel trowel" as described in ACI 302.1R; thin floor coverings include carpeting, resilient flooring, seamless flooring, resinous matrix terrazzo, thin set quarry tile, and thin set ceramic tile.
3. Decorative Exposed Surfaces: Trowel as described in ACI 302.1R; take measures necessary to avoid black-burnish marks; decorative exposed surfaces include surfaces to be stained or dyed, pigmented concrete, surfaces to receive liquid hardeners, surfaces to receive dry-shake hardeners, surfaces to be polished, and all other exposed slab surfaces.
4. Other Surfaces to Be Left Exposed: Trowel as described in ACI 302.1R, minimizing burnish marks and other appearance defects.

E. In areas with floor drains, maintain floor elevation at walls; pitch surfaces uniformly to drains at 1:100 nominal (approximately 1/8 inch per foot).

3.08 Curing And Protection

A. Comply with requirements of ACI 308R. Immediately after placement, protect concrete from premature drying, excessively hot or cold temperatures, and mechanical injury.

B. Uniformly apply evaporation retarder to concrete surfaces if hot, dry, or windy conditions cause moisture loss due to evaporation approaching 0.2 lb/sq.ft./h before and during finishing operations. Apply according to manufacturer's written instructions after placing, screeding, and bull floating or darbying concrete, but before float finishing. A methodology for calculating the moisture loss due to evaporation is provided in ACI 305.1.

C. Maintain concrete with minimal moisture loss at relatively constant temperature for period necessary for hydration of cement and hardening of concrete.

1. Normal concrete: Not less than seven (7) days.

D. Formed Surfaces: Cure by moist curing with forms in place for full curing period.

E. Surfaces Not in Contact with Forms:

1. Initial Curing: Start as soon as free water has disappeared and before surface is dry. Keep continuously moist for not less than seven (7) days by water ponding, water-saturated sand, water-fog spray, or saturated burlap.
   a. Ponding: Maintain 100 percent coverage of water over floor slab areas, continuously for seven (7) days.
   b. Spraying: Spray water over floor slab areas and maintain wet.
   c. Saturated Burlap: Saturate burlap-polyethylene and place burlap-side down over floor slab areas, lapping ends and sides; maintain in place.
2. Final Curing: The surface shall be protected against rapid moisture loss upon the termination of initial curing by replacing wet burlap or similar coverings with plastic sheets until the surface has dried under the sheets.
   a. Moisture-Retaining Sheet: Lap strips not less than 3 inches and seal with waterproof tape or adhesive; secure at edges.

3.09 Field Quality Control

A. An independent testing agency will perform Special Inspections and field quality control tests as required by

Chapter 17 of ICC (IBC)-2015. The testing outlined below includes some, but not all, of the testing and observations required to meet the Special Inspection provisions of the building code. Refer to the following parts of the structural drawings for additional Special Inspection requirements:

1. Statement of Special Inspection Notes
2. Table 1705.3 titled "Required Special Inspections and Tests of Concrete Construction"

B. Provide free access to concrete operations at project site and cooperate with appointed firm.

C. Submit approved mix design of each class of concrete to inspection and testing firm for review prior to commencement of concrete operations.

D. Tests of concrete and concrete materials may be performed at any time to ensure compliance with specified requirements.

E. Compressive Strength Tests: ASTM C39/C39M, for each test, mold and cure four concrete test cylinders. Obtain test samples for every 100 cubic yards or less of each class of concrete placed each day.

F. Take one additional test cylinder during cold weather concreting, cured on job site under same conditions as concrete it represents.

G. Perform one slump test for each set of test cylinders taken, following procedures of ASTM C143/C143M.

H. Air Content: ASTM C173/C173M, one test for each composite sample, but not less than one test for each day's pour of each concrete mixture.

I. Concrete Temperature: ASTM C1064/C1064M, one test hourly when air temperature is 40 deg F and below or 80 deg F and above, and one test for each composite sample.

J. Slab Testing: Cooperate with manufacturer of specified moisture vapor reducing admixture (MVRA) to allow access for sampling and testing concrete for compliance with warranty requirements.

3.10 Defective Concrete

A. Test Results: The testing agency shall report test results in writing to Architect and Contractor within 24 hours of test.

B. Defective Concrete: Concrete not complying with required lines, details, dimensions, tolerances or specified requirements.

C. Repair or replacement of defective concrete will be determined by the Architect. The cost of additional testing shall be borne by Contractor when defective concrete is identified.

D. Do not patch, fill, touch-up, repair, or replace exposed concrete except upon express direction of Architect for each individual area.

3.11 Protection

A. Do not permit traffic over unprotected concrete floor surface until fully cured.

END OF SECTION

DIVISION 4 – MASONRY

SECTION 04812 – THIN BRICK VENEER

PART 1 - GENERAL

1.01 Related Documents:
- A. Drawings and general provisions of the Contract, including General, Supplementary, and Special Conditions Sections, apply to this Section.
- B. System Description:
  1. Thin brick veneer installed over concrete / concrete masonry walls using latex Portland cement mortar and latex Portland cement grout.

1.02 Summary
- A. Section Includes:
  1. Thin brick veneer.
  2. Installation products: adhesive, mortars, grouts, and sealants.
  3. Accessories.

1.03 Related Sections:
- A. Section 05500 - Metal Fabrications (if applicable): Loose steel lintels and fabricated steel items.
- B. Section 07600 – Sheet Metal Flashing and Trim: Through-wall masonry flashings.
- C. Section 07900 - Joint Sealers: Backing rod and sealant at control and expansion joints.

1.04 References:
- A. ACI 530/ASCE 5/TMS 402 - Building Code Requirements for Masonry Structures; American Concrete Institute International; 2008.
- B. ACI 530.1/ASCE 6/TMS 602 - Specification For Masonry Structures; American Concrete Institute International; 2008.
- C. ASTM C 67 – Standard Test Methods for Sampling and Testing Brick and Structural Clay Tile.
- D. ASTM C 91 – Standard Specification for Masonry Cement.
- E. ASTM C 1088 – Standard Specification for Thin Veneer Brick Units Made From Clay or Shale.
- F. ASTM A 82/A 82M - Standard Specification for Steel Wire, Plain, for Concrete Reinforcement; 2005a.
- G. ASTM A 153/A 153M - Standard Specification for Zinc Coating (Hot-Dip) on Iron and Steel Hardware; 2005.
- H. ASTM C 144 - Standard Specification for Aggregate for Masonry Mortar; 2004.
- I. ASTM C 150 - Standard Specification for Portland Cement; 2005.
- J. ASTM C 270 – Standard Specification for Mortar for Unit

Masonry; 2007.

1.05 Submittals:

A. Product Data: Provide data for masonry units, mortar, and masonry accessories.

B. Samples: Submit 10 samples of each color of thin brick units to illustrate color, texture, and extremes of color range.

C. Submit manufacturer's installation instructions.

D. Submit proof of warranty.

E. Submit sample of installation system demonstrating compatibility / functional relationships between adhesives, mortars, grouts, and other components. Submit proof from brick manufacturer verifying suitability for the specific application and use including dimensional stability, water absorption, freeze / thaw resistance, resistance to thermal cycling, and other characteristics that the project may require.

1.06 Quality Assurance:

A. Comply with provisions of ACI 530/ASCE 5/TMS 402 and ACI 530.1/ASCE 6/TMS 602, except where exceeded by requirements of the contract documents.

B. Obtain materials from one manufacturer to ensure compatibility.

C. Veneer Manufacturer shall be a company specializing in thin brick with a minimum of ten (10) years of experience.

D. Installer shall provide proof of a minimum of five (5) years of experience with related thin masonry installations.

E. Upon request, submit testing reports completed by an independent laboratory of each type of thin brick specified.

F. Mock-Up Panel: provide a mock-up of each type/style/finish/size/color of thin brick and trim unit along with respective installation adhesives, mortars, grouts, and other installation materials.

1. Do not start work until approval of sample panel has be received from the Architect.
2. Size: approximately 6'x6'.

1.07 Warranty:

A. Provide minimum Fifty (50) Year Warranty against manufacturing defects.

1.08 Pre-Installation Meeting:

A. Convene one week before starting work of this section.

1.09 Delivery, Storage, and Handling:

A. Deliver, handle, and store masonry materials by means that will prevent mechanical damage and contamination by other materials. Protect materials from dampness, freezing, or overheating in accordance with the manufacturer's instructions.

B. Store clear of the ground on non-staining pallets or planking.

C. Store mortar and other moisture-sensitive materials in protected enclosures.

1.10 Project Conditions:

A. Protection of Masonry: During construction, cover tops of walls, projections, and sills with waterproof sheeting at end of each day's work. Cover partially completed masonry when construction is not in progress.

B. Cold-Weather Requirements: Do not use frozen materials or materials mixed or coated with ice or frost. Do not build on frozen substrates. Remove and replace unit masonry damaged by frost or by freezing conditions. Comply with cold-weather construction requirements contained in ACI 530.1/ASCE 6/TMS 602 or as required by manufacturer.

C. Cold-Weather Cleaning: Use liquid cleaning methods only when air temperature is 40 deg F (4 deg C) and higher and will remain so until masonry has dried, but not less than seven days after completing cleaning.

D. Hot-Weather Requirements: Comply with hot-weather construction requirements contained in ACI 530.1/ASCE 6/TMS 602 or as required by manufacturer.

PART 2 - PRODUCTS

2.01 Thin Brick:

A. Type and Finish: custom cast or Acme ThinBRIK.

B. Quality: ASTM C-1088, Type TBS.

C. Size: Actual 1" thick x 2-1/4" high x 7-5/8" long or match existing.

D. Units shall be uniform in all dimensions and texture, straight and free from cracks, spalls, and other defects.

E. Color: **match colors at New Office and STEM Additions as directed by Architect which are a part of this project.** Iron oxide pigment colors, ASTM C 979 (if applicable).

F. Trim Units: Provide matching thin brick.

G. Minimal Physical Properties: compressive strength shall not be less than 2,000 psi per ASTM C 39.

H. Acceptable Manufacturers:
   1. Impressions In Stone, 1415 South Joplin Avenue, Tulsa, OK 74112
   2. Acme Brick Company, 3024 Acme Brick Plaza, Ft. Worth, TX 76109
   3. Or approved equal.

2.02 Mortar and Grout Mixes:

A. General: Do not use admixtures, including pigments, air-entraining agents, accelerators, retarders, water-repellent agents, antifreeze compounds or other admixtures, unless otherwise indicated.
   1. Do not use calcium chloride in mortar or grout.
   2. Limit cementitious materials in mortar to portland cement and lime.

B. Mortar for Unit Masonry:
   1. Type S Masonry Cement, ASTM C 91.
   2. Masonry sand, ASTM C 144.
   3. Iron oxide pigment colors, ASTM C979.
   4. Clean, clear water, free from deleterious substances.
   5. Mortar colors at exterior thin brick locations to be selected by Architect to match New Office and STEM Additions which are a part of this project.

C. Mortar Mixing:
   1. All mortars shall be machine mixed in equipment that is free of dirt, oil or grease and which is thoroughly cleaned and rinsed after each day's use. Mix no more mortar than can be used before setting takes place.
   2. Mortars shall be mixed placing all dry ingredients in the mixer first and mixing until uniform in color. Then mixed for 3 to 5 minutes with the maximum amount of water to provide workable consistency.
   3. No add-mixtures shall be used at any time in the mortar on this project, unless approved in writing by the Architect.

2.03 Flashings:

A. Metal Flashing Materials: Galvanized Steel or prefinished metal as specified in Section 07600.

B. Rubberized-Asphalt Flashing: composite flashing product consisting of a pliable, adhesive rubberized-asphalt compound, bonded to a high-density, cross-laminated polyethylene film.

C. Elastomeric Thermoplastic Flashing: composite flashing product consisting of a polyester-reinforced ethylene interpolymer alloy.

D. Adhesives, Primers, and Seam Tapes for Flashings: as recommended by flashing manufacturer.

2.04 Accessories:

A. Preformed Control Joints: Rubber material. Provide with corner and tee accessories, fused joints.

B. Compressible Filler: Pre-molded filler strips complying with ASTM D 1056, Grade 2A1; compressible up to 35%; formulated from neoprene, urethane or PVC.

C. Bond Breaker Strips: Asphalt-saturated, organic roofing felt complying with ASTM D 226, Type 1 (No. 15 asphalt felt).

D. Weeps: Free-draining mesh made from polyethylene strands, impact resistant.

E. Cleaning Solution: Non-acidic, not harmful to masonry work or adjacent materials.

F. Moisture Barrier: minimum 15 lb. asphalt-saturated felt paper.

G. Metal Lath: minimum 2.5 gauge galvanized expanded metal lath.

H. Fasteners: galvanized nails, concrete nails or screws, or corrosion-resistant self-tapping metal screws in accordance with manufacturer's instruction relative to project substrate materials.

I. Sealer: high-quality, breathable-type masonry sealer.

J. Spacers: provide joint spacers at all horizontal and vertical joints, corners, etc. to ensure a consistent mortar dimension of 3/8" as noted below.

PART 3 - EXECUTION

3.01 Examination:

A. Verify that field conditions are acceptable and are ready to receive masonry work.

B. Verify that related items provided under other sections are properly sized and located.

C. Examine surfaces and adjacent areas in which work under this Section is to be performed. Report in writing to the Project Manager and/or Architect prevailing conditions that may adversely affect satisfactory execution of the work. Do not proceed with work until unsatisfactory conditions have been corrected.

D. Starting work constitutes acceptance of the existing conditions. The Contractor shall then be responsible for correcting all unsatisfactory and defective work

encountered at Contractor's expense.

E. Ensure that no other work is performed on the walls being covered with Thin Brick for at least 48 hours following installation.

F. Protect surrounding areas from possible damage during installation work.

3.02 Mortar Mix:

A. Type S masonry cement shall be used to attach thin brick to prepared substrate. Either Type S or Type N masonry cement may be used for grout work at Contractor's discretion **– as long as color matches mortar as directed above.**

B. Mix materials in accordance with manufacturer's instructions. Thoroughly mix mortar ingredients in quantities needed for immediate use in accordance with ASTM C 270.

C. Do not use antifreeze compounds.

3.03 Installation:

A. Install thin brick in accordance with manufacturer's printed instructions.

B. Surface Preparation:

1. Clean surfaces thoroughly prior to installation. All surfaces must be free of water, snow, dirt, mud, oil, and other foreign materials prior to application.
2. Prepare surfaces using methods recommended by the manufacturer for achieving the best result for the substrate under the project conditions.
3. Install weather barrier as per manufacturer's instructions. Overlap joints 4 inches minimum. Attach membrane with approved anchors at 6 inches o.c. maximum.
4. Install metal lath over weather barrier as per manufacturer's instructions. Overlap at corners 16 inches minimum. Trim lath edges as necessary with wire snips.
5. Apply a scratch coat of masonry mortar to the prepared work surface and allow to set overnight. Score the wet scratch coat wit a scarifier or similar tool prior to setting.
6. In hot and/or dry work environments, dampen substrate scratch coat and the back of each stone unit with clean water prior to setting the unit.

C. Thin Brick Setting:

1. Plan work to minimize job site cutting of thin brick units. Perform necessary cutting with appropriate

cutting tools utilizing a masonry diamond blade. Angle cuts to minimize the exposure of the aggregate within the brick unit. Orient cut brick units to minimize the view of the exposed aggregate within the observer's visual field.

2. Apply 3/8 inch of mortar to the back of each brick unit.
3. Press the brick unit firmly into position. "Jiggle" each piece slightly to ensure firm bonding. This action should cause mortar to extrude slightly around the edges of the brick unit.
4. Remove excess mortar from the joint area.
5. Brush away excess mortar from the face of brick units just after the mortar has set. Do not allow mortar to remain on face of units beyond 4 hours of installation.
6. Install outside corner stone units with short and long legs alternated. Avoid using less than half-size units, particularly at corners and jambs.
7. Place units with uniform mortar joints not to exceed 3/8" inch in width (match full size brick joints at building additions). Units shall be running bond with 3 horizontal courses and 3 mortar joints equaling 8 inches. Provide flexible PVC joint spaces to provide level, straight, and uniform mortar joints. Depending on spaces provided, remove prior to installation of mortar.
8. Select and mix units from several pallets or cubes as they are placed.
9. Fill the joints with mortar using a grout bag or other grouting tool to the desired depth. Joint shall be "concave".
10. Point and tool the joints before the mortar has completely set.
11. Verify that built-in items are in proper location and ready for roughing into masonry work.
12. No masonry shall be laid when the ambient temperature is below 40 degrees F. All units shall be laid plumb, true to line and level, with accurately spaced course. Level coursing shall be maintained.
13. The Subcontractor shall be responsible for furnishing all required labor, tools, and equipment as required to complete all areas of masonry work on this project. This shall be inclusive of all scaffolding, walk-

boards, and bracing as required to support the work until fully completed.

14. The Subcontractor shall furnish all accessories necessary for the execution of the masonry work. These materials include the thin brick, mortar, reinforcing, ties, and other required accessories.

D. Cutting and Fitting:

1. Cut and fit for pipes and conduit. Coordinate other items to provide correct size, shape, and location.

E. Cleaning and Sealing:

1. Clean thin brick surfaces in accordance with manufacturer's instructions.
2. Protect finished work from damage during remainder of construction period.
3. Apply sealer in accordance with manufacturer's recommendations.
4. The thin brick work shall be left in a state exhibiting properly and fully pointed joints and completely clean surfaces.

3.04 Inspection:

A. Color and Texture Appearance: equal to approved sample when viewed in daylight at 10 feet.

B. Repair and Imperfection Acceptance: not discernable when viewed in daylight at 20 feet.

End of Section

DIVISION 5 – STRUCTURAL STEEL

SECTION 05120 – STRUCTURAL STEEL FRAMING

PART 1 – GENERAL

1.01 Section Includes
- A. Structural steel framing members.
- B. Base plates, shear stud connectors and anchor rods.
- C. Grouting under base plates.

1.02 Related Requirements
- A. Section 05 2100 - Steel Joist Framing.
- B. Section 05 3100 - Steel Decking: Support framing for small openings in deck.
- C. Section 05 5000 - Metal Fabrications: Steel fabrications affecting structural steel work.

1.03 Reference Standards
- A. For all reference standards listed below, comply with the version year in the governing building code adopted by the Authority Having Jurisdiction. For those reference standards that are not directly referenced by the building code, use the latest edition unless noted otherwise.
- B. AISC (MAN) - Steel Construction Manual.
- C. AISC 303 - Code of Standard Practice for Steel Buildings and Bridges.
- D. AISC 360 - Specification for Structural Steel Buildings.
- E. ASTM A6/A6M - Standard Specification for General Requirements for Rolled Structural Steel Bars, Plates, Shapes, and Sheet Piling.
- F. ASTM A29/A29M - Standard Specification for Steel Bars, Carbon Alloy, Hot-Wrought, General Requirements.
- G. ASTM A36/A36M - Standard Specification for Carbon Structural Steel.
- H. ASTM A53/A53M - Standard Specification for Pipe, Steel, Black and Hot-Dipped, Zinc-Coated, Welded and Seamless.
- I. ASTM A123/A123M - Standard Specification for Zinc (Hot-Dip Galvanized) Coatings on Iron and Steel Products.
- J. ASTM A153/A153M - Standard Specification for Zinc Coating (Hot-Dip) on Iron and Steel Hardware.
- K. ASTM A307 - Standard Specification for Carbon Steel Bolts, Studs, and Threaded Rod 60 000 PSI Tensile Strength.
- L. ASTM A325 - Standard Specification for Structural Bolts, Steel, Heat Treated, 120/105 ksi Minimum Tensile Strength.
- M. ASTM A500/A500M - Standard Specification for Cold-Formed Welded and Seamless Carbon Steel Structural Tubing in Rounds and Shapes.
- N. ASTM A563 - Standard Specification for Carbon and Alloy Steel Nuts.
- O. ASTM A563M - Standard Specification for Carbon and Alloy Steel Nuts (Metric).

P. ASTM A572/A572M - Standard Specification for High-Strength Low-Alloy Columbium-Vanadium Structural Steel.
Q. ASTM A992/A992M - Standard Specification for Structural Steel Shapes.
R. ASTM A1064/A1064M - Standard Specification for Carbon-Steel Wire and Welded Wire Reinforcement, Plain and Deformed, for Concrete.
S. ASTM C827/C827M - Standard Test Method for Change in Height at Early Ages of Cylindrical Specimens of Cementitious Mixtures.
T. ASTM E94/E94M - Standard Guide for Radiographic Examination Using Industrial Radiographic Film.
U. ASTM E164 - Standard Practice for Contact Ultrasonic Testing of Weldments.
V. ASTM E165/E165M - Standard Test Method for Liquid Penetrant Examination for General Industry.
W. ASTM E709 - Standard Guide for Magnetic Particle Testing.
X. ASTM F436/F436M - Standard Specification for Hardened Steel Washers Inch and Metric Dimensions.
Y. ASTM F1554 - Standard Specification for Anchor Bolts, Steel, 36, 55, and 105-ksi Yield Strength.
Z. ASTM F1852 - Standard Specification for "Twist Off" Type Tension Control Structural Bolt/Nut/Washer Assemblies, Steel, Heat Treated, 120/105 ksi Minimum Tensile Strength.
AA. AWS A2.4 - Standard Symbols for Welding, Brazing, and Nondestructive Examination.
AB. AWS D1.1/D1.1M - Structural Welding Code - Steel.
AC. ICC (IBC)-2015 - International Building Code.
AD. MPI #79 - Primer, Alkyd, Anti-Corrosive for Metal.
AE. RCSC (HSBOLT) - Specification for Structural Joints Using High-Strength Bolts; Research Council on Structural Connections.
AF. SSPC-Paint 20 - Zinc-Rich Primers (Type I, "Inorganic," and Type II, "Organic").
AG. SSPC-SP 3 - Power Tool Cleaning.
AH. SSPC-SP 6 - Commercial Blast Cleaning.

1.04 Submittals

A. See Section 01 3000 - Administrative Requirements, for submittal procedures.
B. Shop Drawings:
   1. Indicate profiles, sizes, spacing, locations of structural members, openings, attachments, and fasteners.
   2. Indicate cambers and loads.
   3. Indicate welded connections with AWS A2.4 welding symbols. Indicate net weld lengths.

C. Manufacturer's Mill Certificate: Certify that products meet or exceed specified requirements.
D. Product Data: For shop primers, include manufacturer's technical information including basic materials analysis and application instructions.
E. Welders Certificates: Certify welders employed on the Work, verifying AWS qualification within the previous 12 months.

1.05 Quality Assurance
A. Fabricate structural steel members in accordance with AISC (MAN) "Steel Construction Manual."
B. Fabricator Qualifications:
1. A steel fabricator specializing in performing the work of this section with minimum 10 years of experience.
C. Erector Qualifications:
1. An erector specializing in performing the work of this section with minimum 5 years of experience.

1.06 Delivery, Storage And Handling
A. Comply with the requirements of the General Conditions and of ASTM A6/A6M, including the following.
B. Store materials to permit easy access for inspection and identification. Keep steel members off ground and spaced by using pallets, dunnage, or other supports and spacers. Protect steel members and packaged materials from corrosion and deterioration.
1. Do not store materials on structure in a manner that might cause distortion, damage, or overload to members or supporting structures. Repair or replace damaged materials or structures as directed.
C. Store fasteners in a protected place in sealed containers with manufacturer's labels intact.
1. Fasteners may be repackaged provided Owner's testing and inspecting agency observes repackaging and seals containers.
2. Clean and relubricate bolts and nuts that become dry or rusty before use.
3. Comply with manufacturers' written recommendations for cleaning and lubricating ASTM F1852 fasteners and for retesting fasteners after lubrication.

PART 2 - PRODUCTS

2.01 Materials
A. Steel Angles, Plates, and Channels: ASTM A36/A36M.
B. Steel W Shapes and Tees: ASTM A992/A992M.
C. Cold-Formed Structural Tubing: ASTM A500/A500M, Grade C.
D. Pipe: ASTM A53/A53M, Grade B, Finish black.

E. Headed Stud Anchors: AWS D1.1 Type B, ASTM A29 Grades 1010 through 1020.
F. Structural Bolts and Nuts: Carbon steel, ASTM A307, Grade A and galvanized in compliance with ASTM A153/A153M, Class C.
G. High-Strength Structural Bolts, Nuts, and Washers: ASTM A325, Type 1, heavy-hex steel structural bolts; ASTM A563, Grade C heavy-hex carbon-steel nuts; and ASTM F436/F436M, Type 1, hardened carbon-steel washers; all with plain finish.
H. Tension Control Bolts: Twist-off type: ASTM F1852.
I. Unheaded Anchor Rods: ASTM F1554, Grade 55 , Supplementary Requirement S1, Weldable, plain, with matching ASTM A563 or ASTM A563M nuts and ASTM F436/F436M Type 1 washers.
J. Deformed Bar Anchors: AWS D1.1/D1.1M Type C, ASTM A1064 Grade 70.
K. Welding Materials: AWS D1.1/D1.1M; type required for materials being welded.
L. Grout: ASTM C1107/C1107M; Non-shrink; premixed compound consisting of non-metallic aggregate, cement, water reducing and plasticizing agents.
    1. Minimum Compressive Strength at 48 Hours: 3000 pounds per square inch.
    2. Minimum Compressive Strength at 28 Days: 7,000 pounds per square inch.
    3. Height Change, Plastic State; when tested according to ASTM C827/C827M:
        a. Maximum: Plus 4 percent.
        b. Minimum: Plus 1 percent.
M. Shop and Touch-Up Primers: As required below, complying with VOC limitations of authorities having jurisdiction.
    1. Steel Exposed to Exterior Weather or an Uncontrolled Environment: Two-component, high performance, zinc-rich, aromatic urethane, compatible with topcoat and complying with SSPC-Paint 20.
    2. Interior Steel: Fabricator's standard lead- and chromate-free, non-asphaltic, rust-inhibiting primer complying with MPI #79 and compatible with topcoat.
N. Touch-Up Primer for Galvanized Surfaces: SSPC-Paint 20, complying with VOC limitations of authorities having jurisdiction.

2.02 Fabrication

A. Shop fabricate to greatest extent possible. Fabricate according to AISC 303 and to AISC 360.
B. Fabricate connections for bolt, nut, and washer connectors.
C. Develop required camber for members.
D. Fabricated uncambered beams with rolling camber up.

2.03 Finish

A. Prepare structural component surfaces in accordance with SSPC-SP3 for interior steel or SSPC-SP6 for all steel exposed to exterior weather or an uncontrolled environment.

B. Shop prime structural steel members:

1. Do not prime surfaces that will be galvanized, fireproofed, field welded, in contact with concrete, or [in slip surfaces of slip-critical connections].
2. All steel exposed to exterior weather or an uncontrolled environment shall be blast cleaned and primed with a submitted and approved zinc-rich primer.
3. Interior steel shall be shop primed with the fabricators standard shop primer.

C. Galvanize structural steel members to comply with ASTM A123/A123M.

2.04 Source Quality Control & Quality Assurance

A. Unless the fabricator is designated an AISC-Certified Plant, Category STD, or is accredited by the IAS Fabricator Inspection Program for Structural Steel, an independent testing agency will perform Special Inspections and field quality control and quality assurance tests in the fabricator's shop as required by Chapter 17 of ICC (IBC)-2015 and Chapter N of AISC 360. Refer to the following parts of the structural drawings for additional Special Inspection requirements.

1. Statement of Special Inspection Notes
2. Two tables titled "Required Verification and Inspection of Steel Construction"

PART 3 - EXECUTION

3.01 Examination

A. Verify that conditions are appropriate for erection of structural steel and that the work may properly proceed.

3.02 Erection

A. Erect structural steel in compliance with AISC 303.

B. Allow for erection loads and provide sufficient temporary bracing to maintain structure in safe condition, plumb, and in true alignment until completion of erection and installation of permanent bracing. Refer to the "Construction Loads and Stability" section of the General Notes in the Project Drawings for additional information and requirements.

C. Field weld components, deformed bar anchors and shear studs indicated on shop drawings.

D. Use carbon steel bolts only for temporary bracing during construction, unless otherwise specifically permitted on

drawings. Install high-strength bolts in accordance with RCSC (HSBOLT) "Specification for Structural Joints Using High-Strength Bolts".

E. Do not field cut or alter structural members without approval of Structural Engineer.

F. After erection, prime welds, abrasions, and surfaces not shop primed, except surfaces to be in contact with concrete.

G. Grout solidly between column plates and bearing surfaces, complying with manufacturer's instructions for non-shrink grout. Trowel grouted surfaces smooth, splaying neatly to 45 degrees.

3.03 Field Quality Control & Quality Assurance

A. An independent testing agency will perform Special Inspections and field quality control and quality assurance tests as required by Chapter 17 of ICC (IBC)-2015 and Chapter N of AISC 360. Refer to the following parts of the structural drawings for additional Special Inspection requirements:

1. Statement of Special Inspection Notes
2. Two tables titled "Required Verification and Inspection of Steel Construction"

END OF SECTION

DIVISION 5 – STRUCTURAL STEEL

SECTION 05210 – STEEL JOIST FRAMING

PART 1 – GENERAL

1.01 Section Includes
- A. Open web steel joists, with bridging, attached seats and anchors.
- B. Loose bearing members, such as plates or angles, and anchor bolts for site placement.
- C. Supplementary framing for floor and roof openings greater than 8 inches.

1.02 Related Requirements
- A. Section 05 1200 - Structural Steel Framing: Grouting base plates and bearing plates. Superstructure framing.
- B. Section 05 1200 - Structural Steel Framing: Superstructure framing.
- C. Section 05 3100 - Steel Decking: Bearing plates and angles.
- D. Section 05 5000 - Metal Fabrications: Non-framing steel fabrications attached to joists.

1.03 Reference Standards:
- A. For all reference standards listed below, comply with the version year in the governing building code adopted by the Authority Having Jurisdiction. For those reference standards that are not directly referenced by the building code, use the latest edition unless noted otherwise.
- B. ASTM A36/A36M - Standard Specification for Carbon Structural Steel.
- C. ASTM A153/A153M - Standard Specification for Zinc Coating (Hot-Dip) on Iron and Steel Hardware.
- D. ASTM A307 - Standard Specification for Carbon Steel Bolts, Studs, and Threaded Rod 60 000 PSI Tensile Strength.
- E. ASTM A325 - Standard Specification for Structural Bolts, Steel, Heat Treated, 120/105 ksi Minimum Tensile Strength.
- F. ASTM A436 - Standard Specification for Austenitic Gray Iron Castings.
- G. ASTM A563 - Standard Specification for Carbon and Alloy Steel Nuts.
- H. AWS B2.1/B2.1M - Specification for Welding Procedure and Performance Qualification.
- I. AWS D1.1/D1.1M - Structural Welding Code - Steel.
- J. IAS AC172 - Accreditation Criteria for Fabricator Inspection Programs for Structural Steel.
- K. ICC (IBC)-2015 - International Building Code.
- L. SJI JG-10 - Standard Specification for Joist Girders.
- M. SJI K-10 - Standard Specification for Open Web Steel Joists, K-Series.

N. SJI LH/DLH-10 - Standard Specification for Longspan Steel Joists, LH-series and Deep Longspan Steel Joists, DLH-series.
O. SJI Technical Digest No. 9 - Handling and Erection of Steel Joists and Joist Girders.
P. SSPC-Paint 15 - Steel Joist Shop Primer/Metal Building Primer.
Q. SSPC-SP 2 - Hand Tool Cleaning.

1.04 Submittals

A. See Section 01 3000 - Administrative Requirements, for submittal procedures.
B. Shop Drawings: Indicate standard designations, joist coding, configurations, sizes, spacings, cambers, locations of joists, joist leg extensions, bridging, connections, and attachments.
C. Welders' Certificates: Submit manufacturer's certificates, certifying welders employed on the Work, verifying AWS qualification within the previous 12 months.
D. Manufacturer's Qualification Statement.
E. Comprehensive engineering analysis of all joists signed and sealed by the qualified professional engineer licensed in the state of the project responsible for its preparation.
F. Manufacturer's Certification: At completion of manufacture, the steel joist manufacturer shall submit a certificate of compliance to the owner’s authorized agent for submittal to the building official as specified in Section 1704.5 of ICC (IBC)-2015 stating that work was performed in accordance with approved construction documents and with the SJI specifications listed herein.

1.05 Quality Assurance

A. Perform Work, including that for headers and other supplementary framing, in accordance with SJI JG-10, SJI K-10, and SJI LH/DLH-10 and SJI Technical Digest No. 9.
B. Manufacturer Qualifications: Company specializing in performing the work of this section with minimum 5 years documented experience.

1.06 Delivery, Storage, And Handling

A. Transport, handle, store, and protect products to SJI requirements.

PART 2 - PRODUCTS

2.01 Materials

A. Open Web Joists: Types as indicated on drawings:
1. Minimum End Bearing on Steel Supports: Comply with referenced SJI standard.

2. Minimum End Bearing on Concrete or Masonry Supports: Comply with referenced SJI standard.
3. Finish: Shop primed.

B. Anchor Bolts, Nuts and Washers: ASTM A307, hot-dip galvanized per ASTM A153/A153M, Class C.

C. High-Strength Structural Bolts, Nuts, and Washers: ASTM A325 with matching compatible ASTM A563 nuts and ASTM A436 washers.

D. Headed Stud Anchors: [AWS D1.1 Type B, ASTM A29 Grades 1010 through 1020].

E. Structural Steel For Supplementary Framing and Joist Leg Extensions: ASTM A36/A36M.

F. Welding Materials: AWS D1.1/D1.1M; type required for materials being welded.

G. Shop and Touch-Up Primer: SSPC-Paint 15, complying with VOC limitations of authorities having jurisdiction.

2.02 Finish

A. Shop prime joists as specified.
1. Do not prime surfaces that will be fireproofed.

B. Prepare surfaces to be finished in accordance with SSPC-SP2.

2.03 Source Quality Control

A. Welded Connections: Visually inspect all shop-welded connections.

PART 3 - EXECUTION

3.01 Examination

A. Verify existing conditions prior to beginning work.

3.02 Erection

A. Erect joists in compliance with SJI Technical Digest No. 9 and all applicable provisions of OSHA safety standards.

B. Erect joists with correct bearing on supports.

C. Allow for erection loads. Provide sufficient temporary bracing to maintain framing safe, plumb, and in true alignment.

D. Coordinate the placement of anchors for securing loose bearing members furnished as part of the work of this section.

E. After joist alignment and installation of framing, field weld joist seats to steel bearing surfaces.

F. Position and field weld joist chord extensions and wall attachments as detailed.

G. Install supplementary framing for floor and roof openings greater than 8 inches.

H. Do not permit erection of decking until joists are braced, bridged, and secured or until completion of erection and installation of permanent bridging and bracing.

I. Do not field cut or alter structural members without approval of joist manufacturer.

J. After erection, prime welds, damaged shop primer, and surfaces not shop primed, except surfaces specified not to be primed.

3.03 Tolerances

A. Maximum Variation From Plumb: 1/4 inch.

B. Maximum Offset From True Alignment: 1/4 inch.

3.04 Field Quality Control

A. An independent testing agency will perform Special Inspections and field quality control as required by Chapter 17 of ICC (IBC)-2015. Refer to the following parts of the structural drawings for additional Special Inspection requirements.

1. Statement of Special Inspection Notes
2. Table 1705.2.3 titled "Required Special Inspections of Open-Web Steel Joists and Joist Girders"

END OF SECTION

DIVISION 5 – STRUCTURAL STEEL

SECTION 05310 – STEEL DECKING

PART 1 – GENERAL

1.01 Section Includes
- A. Roof deck.
- B. Supplementary framing for openings up to and including 8 inches.
- C. Bearing plates and angles.

1.02 Related Requirements
- A. Section 05 1200 - Structural Steel Framing: Support framing for openings larger than 8 inches and shear stud connectors.
- B. Section 05 2100 - Steel Joist Framing: Support framing for openings larger than 8 inches.
- C. Section 05 5000 - Metal Fabrications: Steel angle concrete stops at deck edges.

1.03 Reference Standards
- A. For all reference standards listed below, comply with the version year in the governing building code adopted by the Authority Having Jurisdiction. For those reference standards that are not directly referenced by the building code, use the latest edition unless noted otherwise.
- B. ASTM A36/A36M - Standard Specification for Carbon Structural Steel.
- C. ASTM A123/A123M - Standard Specification for Zinc (Hot-Dip Galvanized) Coatings on Iron and Steel Products.
- D. ASTM A653/A653M - Standard Specification for Steel Sheet, Zinc-Coated (Galvanized) or Zinc-Iron Alloy-Coated (Galvannealed) by the Hot-Dip Process.
- E. AWS D1.1/D1.1M - Structural Welding Code - Steel.
- F. AWS D1.3/D1.3M - Structural Welding Code - Sheet Steel.
- G. ICC (IBC)-2015 - International Building Code.
- H. SDI (DM) - Publication No.30, Design Manual for Composite Decks, Form Decks, and Roof Decks.
- I. SDI (QA/QC) - Standard for Quality Control and Quality Assurance for Installation of Steel Deck.
- J. SSPC-Paint 20 - Zinc-Rich Primers (Type I, "Inorganic," and Type II, "Organic").

1.04 Submittals
- A. See Section 01 3000 - Administrative Requirements, for submittals procedures.
- B. Product Data: Provide deck profile characteristics, dimensions, structural properties, and finishes.
- C. Shop Drawings: Indicate deck plan, support locations, projections, openings, reinforcement, pertinent details, and accessories.
- D. Submit manufacturer's installation instructions.

E. Welders Certificates: Certify welders employed on the Work, verifying AWS qualification within the previous 12 months.

1.05 Quality Assurance

A. Special inspections and qualification of welding special inspectors for cold-formed steel floor and roof deck shall be in accordance with the quality assurance inspection requirements of SDI (QA/QC).

B. Installer Qualifications: Company specializing in performing the work of this Section with minimum 5 years of experience.

1.06 Delivery, Storage, And Handling

A. Cut plastic wrap to encourage ventilation.

B. Separate sheets and store deck on dry wood sleepers; slope for positive drainage.

PART 2 - PRODUCTS

2.01 Steel Deck

A. Roof Deck: Non-composite type, fluted steel sheet:

1. Galvanized Steel Sheet: ASTM A653/A653M, Structural Steel (SS) Grade 33/230, with G60/Z180 galvanized coating.
2. Structural Properties: As indicated in General Notes.

2.02 Accessory Materials

A. Bearing Plates and Angles: ASTM A36/A36M steel, galvanized per ASTM A123/A123M.

B. Welding Materials: AWS D1.1/D1.1M.

C. Mechanical Fasteners: Steel; hex washer head, self-drilling, self-tapping.

D. Touch-Up Primer for Galvanized Surfaces: SSPC-Paint 20, complying with VOC limitations of authorities having jurisdiction.

E. Flute Closures: Closed cell foam rubber, 1 inch thick; profiled to fit tight to the deck.

2.03 Fabricated Deck Accessories

A. Sheet Metal Deck Accessories: Metal closure strips, wet concrete stops, and cover plates, 20 gauge, 0.0359 inch thick sheet steel; of profile and size as indicated; finished same as deck.

B. Roof Sump Pans: Formed sheet steel, 14 gauge, 0.0747 inch minimum thickness, flat bottom, sloped sides, recessed 1-1/2 inches below roof deck surface, bearing flange 3 inches wide, sealed watertight.

SECTION 05310 – STEEL DECKING

PART 3 - EXECUTION

3.01 Examination

A. Verify existing conditions prior to beginning work.

3.02 Installation

A. Erect metal deck in accordance with SDI Design Manual and manufacturer's instructions. Align and level.

B. On concrete and masonry surfaces provide minimum 4 inch bearing.

C. On steel supports provide minimum 2 inch bearing at discontinuous ends of deck and minimum 3 inch bearing length of continuous roof deck over interior supports.

D. Fasten deck to steel support members as indicated at spacings indicated on the drawings using methods specified.

E. Drive mechanical sidelap connectors completely through adjacent lapped sheets; positively engage adjacent sheets with minimum three-thread penetration.

F. Where roof deck changes direction, install 6 inch minimum wide sheet steel cover plates, of same thickness as deck. Attach both sides of cover plate to roof deck below with the same fasteners and spacings as required for deck to supports.

G. Close openings above walls and partitions perpendicular to deck flutes with single row of foam cell closures.

H. Position roof drain pans with flange bearing on top surface of deck. Fusion weld at each deck flute.

3.03 Field Quality Control

A. An independent testing agency will perform Special Inspections and field quality control tests as required by Chapter 17 of ICC (IBC)-2015 and SDI (QA/QC). Refer to the following parts of the structural drawings for additional Special Inspection requirements:

1. Statement of Special Inspection Notes
2. Table titled "Required Inspection of Cold-Formed Steel Deck"

B. Concurrent with the submittal of special inspection reports to the Owner's Representative, the special inspector shall submit to the Owner's Representative and the Installer a list of nonconforming items.

END OF SECTION

DIVISION 5 – METALS

SECTION 05400 – COLD-FORMED METAL FRAMING

PART 1 - GENERAL

1.01 Related Documents

A. Drawings and general provisions of the Contract, including General and Supplementary Conditions and Division 1 Specification Sections, apply to this Section.

1.02 Summary

A. This Section includes the following:
   1. Exterior and interior non-load-bearing wall framing.
   2. Soffit joist framing.

B. Related Sections include the following:
   1. Division 5 Section "Metal Fabrications" for masonry shelf angles and connections.
   2. Division 9 Section "Gypsum Board Assemblies" for interior non-load-bearing, metal-stud framing and ceiling-suspension assemblies.

1.03 Performance Requirements

A. Structural Performance: Provide cold-formed metal framing capable of withstanding design loads within limits and under conditions indicated.
   1. Design Loads: Design loads shall be calculated components and cladding load per ASCE/SEI 7 edition indicated on the drawings.
   2. Deflection Limits: Design framing systems to withstand design loads without deflections greater than the following:
      a. Exterior Non-Load-Bearing Framing: Horizontal deflection of 1/600 of wall height at areas backing up brick veneer, and 1/240 of wall height at areas backing up other materials.
      b. Soffit Joist Framing: Vertical deflection of 1/240 of the span.
   3. Design framing system to maintain clearances at openings, to allow for construction tolerances, and to accommodate live load deflection of primary building structure as follows:
      a. Upward and downward movement of 1 inch.

B. Cold-Formed Steel Framing, General: Design according to AISI's "Standard for Cold-Formed Steel Framing - General Provisions."
   1. Headers: Design according to AISI's "Standard for Cold-Formed Steel Framing - Header Design."
   2. Design exterior non-load-bearing wall framing to accommodate horizontal deflection without regard for contribution of sheathing materials.

SECTION 05400 – COLD-FORMED METAL FRAMING

1.04 Submittals

A. Product Data: For each type of cold-formed metal framing product and accessory indicated.

B. Shop Drawings: Show layout, spacings, sizes, thicknesses, and types of cold-formed metal framing; fabrication; and fastening and anchorage details, including mechanical fasteners. Show reinforcing channels, opening framing, supplemental framing, strapping, bracing, bridging, splices, accessories, connection details, and attachment to adjoining work.

1. For cold-formed metal framing indicated to comply with design loads, include structural analysis data signed and sealed by the qualified professional engineer responsible for their preparation.

C. Welding certificates.

D. Research/Evaluation Reports: For cold-formed metal framing.

1.05 Quality Assurance

A. Engineering Responsibility: Preparation of Shop Drawings, design calculations, and other structural data by a qualified professional engineer.

B. Professional Engineer Qualifications: A professional engineer who is legally qualified to practice in jurisdiction where Project is located and who is experienced in providing engineering services of the kind indicated. Engineering services are defined as those performed for installations of cold-formed metal framing that are similar to those indicated for this Project in material, design, and extent.

C. Welding: Qualify procedures and personnel according to AWS D1.1/D1.1M, "Structural Welding Code--Steel," and AWS D1.3, "Structural Welding Code--Sheet Steel."

D. AISI Specifications and Standards: Comply with AISI's "North American Specification for the Design of Cold-Formed Steel Structural Members" and its "Standard for Cold-Formed Steel Framing - General Provisions."

1. Comply with AISI's "Standard for Cold-Formed Steel Framing - Truss Design."
2. Comply with AISI's "Standard for Cold-Formed Steel Framing - Header Design."

1.06 Delivery, Storage, And Handling

A. Protect cold-formed metal framing from corrosion, deformation, and other damage during delivery, storage, and handling.

B. Store cold-formed metal framing, protect with a waterproof covering, and ventilate to avoid condensation.

SECTION 05400 – COLD-FORMED METAL FRAMING

PART 2 - PRODUCTS

2.01 Manufacturers

A. Available Manufacturers: Subject to compliance with requirements, manufacturers offering cold-formed metal framing that may be incorporated into the Work include, but are not limited to, the following:
   1. Allied Studco.
   2. AllSteel Products, Inc.
   3. California Expanded Metal Products Company.
   4. Clark Steel Framing.
   5. Consolidated Fabricators Corp.; Building Products Division.
   6. Craco Metals Manufacturing, LLC.
   7. Custom Stud, Inc.
   8. Dale/Incor.
   9. Design Shapes in Steel.
   10. Dietrich Metal Framing; a Worthington Industries Company.
   11. Formetal Co. Inc. (The).
   12. Innovative Steel Systems.
   13. MarinoWare; a division of Ware Industries.
   14. Quail Run Building Materials, Inc.
   15. SCAFCO Corporation.
   16. Southeastern Stud & Components, Inc.
   17. Steel Construction Systems.
   18. Steeler, Inc.
   19. Super Stud Building Products, Inc.
   20. United Metal Products, Inc.

2.02 Materials

A. Steel Sheet: ASTM A 1003/A 1003M, Structural Grade, Type H, metallic coated, of grade and coating weight as follows:
   1. Grade: ST33H (ST230H).
   2. Coating: G60 (Z180).

B. Steel Sheet for Vertical Deflection Clips: ASTM A 653/A 653M, structural steel, zinc coated, of grade and coating as follows:
   1. Grade: 50 (340), Class 1 or 2.
   2. Coating: G90 (Z275).

2.03 Exterior Non-Load-Bearing Wall Framing

A. Steel Studs: Manufacturer's standard C-shaped steel studs, of web depths indicated, punched, with stiffened flanges, and as follows:
   1. Minimum Base-Metal Thickness: 0.0428 inches (1.09 mm).
   2. Flange Width: 1-5/8 inches (41 mm).

B. Steel Track: Manufacturer's standard U-shaped steel track, of web depths indicated, unpunched, with unstiffened flanges, and as follows:
   1. Minimum Base-Metal Thickness: 0.0538 inches (1.37 mm)
   2. Flange Width: 1-1/2 inches.

C. Vertical Deflection Clip Option: Manufacturer's standard head clips, capable of accommodating upward and downward vertical displacement of primary structure through positive mechanical attachment to stud web.
   1. Available Manufacturers: Subject to compliance with requirements, manufacturers offering products that may be incorporated into the Work include, but are not limited to, the following:
      a. Dietrich Metal Framing; a Worthington Industries Company.
      b. MarinoWare, a division of Ware Industries.
      c. SCAFCO Corporation
      d. The Steel Network, Inc.

D. Single Deflection Track Option: Manufacturer's single, deep-leg, U-shaped steel track; unpunched, with unstiffened flanges, of web depth to contain studs while allowing free vertical movement, with flanges designed to support horizontal and lateral loads and transfer them to the primary structure, and as follows:
   1. Minimum Base-Metal Thickness: 0.0538 inch (1.37 mm).
   2. Flange Width: 1 inch (25 mm) plus the design gap for 1-story structures and 1 inch (25 mm) plus twice the design gap for other applications.

E. Double Deflection Track Option: Manufacturer's double, deep-leg, U-shaped steel tracks, consisting of nested inner and outer tracks; unpunched, with unstiffened flanges.
   1. Outer Track: Of web depth to allow free vertical movement of inner track, with flanges designed to support horizontal and lateral loads and transfer them to the primary structure, and as follows:
      a. Minimum Base-Metal Thickness: 0.0538 inch (1.37 mm).
      b. Flange Width: 1 inch (25 mm) plus the design gap for 1-story structures and 1 inch (25 mm) plus twice the design gap for other applications.
   2. Inner Track: Of web depth indicated, and as follows:
      a. Minimum Base-Metal Thickness: 0.0428 inch (1.09 mm).
      b. Flange Width: Equal to sum of outer deflection track flange width plus 1 inch.

2.04 Soffit Joist Framing

A. Steel Ceiling Joists: Manufacturer's standard C-shaped steel sections, of web depth indicated, unpunched, with stiffened flanges, and as follows:
   1. Minimum Base-Metal Thickness: As indicated on drawings.
   2. Flange Width: 1-5/8 inches (41 mm) minimum.

2.05 Framing Accessories

A. Fabricate steel-framing accessories from steel sheet, ASTM A 1003/A 1003M, Structural Grade, Type H, metallic coated, of same grade and coating weight used for framing members.

B. Provide accessories of manufacturer's standard thickness and configuration, unless otherwise indicated, as follows:
   1. Supplementary framing.
   2. Bracing, bridging, and solid blocking.
   3. Web stiffeners.
   4. Anchor clips.
   5. End clips.
   6. Foundation clips.
   7. Gusset plates.
   8. Stud kickers, knee braces, and girts.
   9. Joist hangers and end closures.
   10. Hole reinforcing plates.
   11. Backer plates.

2.06 Anchors, Clips, And Fasteners

A. Anchor Bolts: ASTM F 1554, Grade 55, threaded carbon-steel headless bolts, with encased end threaded, and carbon-steel nuts; and flat, hardened-steel washers; zinc coated by hot-dip process according to ASTM A 153/A 153M, Class C or mechanically deposition according to ASTM B 695, Class 50.

B. Expansion Anchors: Fabricated from corrosion-resistant materials, with capability to sustain, without failure, a load equal to 5 times design load, as determined by testing per ASTM E 488 conducted by a qualified independent testing agency.

C. Power-Actuated Anchors: Fastener system of type suitable for application indicated, fabricated from corrosion-resistant materials, with capability to sustain, without failure, a load equal to 5 times design load, as determined by testing per ASTM E 1190 conducted by a qualified independent testing agency.

D. Mechanical Fasteners: ASTM C 1513, corrosion-resistant-coated, self-drilling, self-tapping steel drill screws.
   1. Head Type: Low-profile head beneath sheathing, manufacturer's standard elsewhere.

E. Welding Electrodes: Comply with AWS standards.

2.07 Miscellaneous Materials

A. Galvanizing Repair Paint: ASTM A 780.

B. Nonmetallic, Nonshrink Grout: Premixed, nonmetallic, noncorrosive, nonstaining grout containing selected silica sands, portland cement, shrinkage-compensating agents, and plasticizing and water-reducing agents, complying with ASTM C 1107, with fluid consistency and 30-minute working time.

C. Shims: Load bearing, high-density multimonomer plastic, nonleaching.

D. Sealer Gaskets: Closed-cell neoprene foam, 1/4 inch (6.4 mm) thick, selected from manufacturer's standard widths to match width of bottom track or rim track members.

2.08 Fabrication

A. Fabricate cold-formed metal framing and accessories plumb, square, and true to line, and with connections securely fastened, according to referenced AISI's specifications and standards, manufacturer's written instructions, and requirements in this Section.

1. Fabricate framing assemblies using jigs or templates.
2. Cut framing members by sawing or shearing; do not torch cut.
3. Fasten cold-formed metal framing members by welding, screw fastening, clinch fastening, or riveting as standard with fabricator. Wire tying of framing members is not permitted.
   a. Comply with AWS D1.3 requirements and procedures for welding, appearance and quality of welds, and methods used in correcting welding work.
   b. Locate mechanical fasteners and install according to Shop Drawings, with screw penetrating joined members by not less than three exposed screw threads.
4. Fasten other materials to cold-formed metal framing by welding, bolting, or screw fastening, according to Shop Drawings.

B. Reinforce, stiffen, and brace framing assemblies to withstand handling, delivery, and erection stresses. Lift fabricated assemblies to prevent damage or permanent distortion.

C. Fabrication Tolerances: Fabricate assemblies level, plumb, and true to line to a maximum allowable tolerance variation of 1/8 inch in 10 feet (1:960) and as follows:

1. Spacing: Space individual framing members no more than plus or minus 1/8 inch (3 mm) from plan location. Cumulative error shall not exceed minimum fastening

requirements of sheathing or other finishing materials.

2. Squareness: Fabricate each cold-formed metal framing assembly to a maximum out-of-square tolerance of 1/8 inch (3 mm).

PART 3 - EXECUTION

3.01 Examination

A. Examine supporting substrates and abutting structural framing for compliance with requirements for installation tolerances and other conditions affecting performance.

1. Proceed with installation only after unsatisfactory conditions have been corrected.

3.02 Installation, General

A. Cold-formed metal framing may be shop or field fabricated for installation, or it may be field assembled.

B. Install cold-formed metal framing according to AISI's "Standard for Cold-Formed Steel Framing - General Provisions" and to manufacturer's written instructions unless more stringent requirements are indicated.

C. Install shop- or field-fabricated, cold-formed framing and securely anchor to supporting structure.

1. Screw, bolt, or weld wall panels at horizontal and vertical junctures to produce flush, even, true-to-line joints with maximum variation in plane and true position between fabricated panels not exceeding 1/16 inch (1.6 mm).

D. Install cold-formed metal framing and accessories plumb, square, and true to line, and with connections securely fastened.

1. Cut framing members by sawing or shearing; do not torch cut.

2. Fasten cold-formed metal framing members by welding, screw fastening, clinch fastening, or riveting. Wire tying of framing members is not permitted.

a. Comply with AWS D1.3 requirements and procedures for welding, appearance and quality of welds, and methods used in correcting welding work.

b. Locate mechanical fasteners and install according to Shop Drawings, and complying with requirements for spacing, edge distances, and screw penetration.

E. Install framing members in one-piece lengths unless splice connections are indicated for track or tension members.

F. Install temporary bracing and supports to secure framing and support loads comparable in intensity to those for

which structure was designed. Maintain braces and supports in place, undisturbed, until entire integrated supporting structure has been completed and permanent connections to framing are secured.

G. Do not bridge building expansion and control joints with cold-formed metal framing. Independently frame both sides of joints.

H. Install insulation, specified in Division 7 Section "Building Insulation," in built-up exterior framing members, such as headers, sills, boxed joists, and multiple studs at openings, that are inaccessible on completion of framing work.

I. Fasten hole reinforcing plate over web penetrations that exceed size of manufacturer's standard punched openings.

J. Erection Tolerances: Install cold-formed metal framing level, plumb, and true to line to a maximum allowable tolerance variation of 1/8 inch in 10 feet (1:960) and as follows:

1. Space individual framing members no more than plus or minus 1/8 inch (3 mm) from plan location. Cumulative error shall not exceed minimum fastening requirements of sheathing or other finishing materials.

3.03 Exterior Non-Load-Bearing Wall Installation

A. Install continuous tracks sized to match studs. Align tracks accurately and securely anchor to supporting structure as indicated.

B. Fasten both flanges of studs to bottom track, unless otherwise indicated. Fast both flanges to top track if required by deflection option selected. Space studs as follows:

1. Stud Spacing: 16 inches (406 mm).

C. Set studs plumb, except as needed for diagonal bracing or required for nonplumb walls or warped surfaces and similar requirements.

D. Isolate non-load-bearing steel framing from building structure to prevent transfer of vertical loads while providing lateral support.

1. Single Deflection Track Option: Install single-leg deflection tracks and anchor to building structure.
2. Double Deflection Track Option: Install double deep-leg deflection tracks and anchor outer track to building structure.
3. Deflection Clip Option: Connect vertical deflection clips to infill studs and anchor to building structure.

E. Install horizontal bridging in wall studs, spaced in rows indicated on Shop Drawings but not more than 48 inches (1220 mm) apart. Fasten at each stud intersection.
   1. Top Bridging for Single Deflection Track Option: Install row of horizontal bridging within 12 inches (305 mm) of single deflection track. Install a combination of flat, taut, steel sheet straps of width and thickness indicated and stud or stud-track solid blocking of width and thickness matching studs. Fasten flat straps to stud flanges and secure solid blocking to stud webs or flanges.
      a. Install solid blocking at maximum 96-inch (2440-mm) centers and as shown on approved Shop Drawings.
   2. Bridging Options:
      a. Cold-rolled steel channel, welded or mechanically fastened to webs of punched studs.
      b. Combination of flat, taut, steel sheet straps of width and thickness indicated and stud-track solid blocking of width and thickness to match studs. Fasten flat straps to stud flanges and secure solid blocking to stud webs or flanges.
      c. Proprietary bridging bars installed according to manufacturer's written instructions.

F. Install miscellaneous framing and connections, including stud kickers, web stiffeners, clip angles, continuous angles, anchors, fasteners, and stud girts, to provide a complete and stable wall-framing system.

3.04 Joist Installation

A. Install perimeter joist track sized to match joists. Align and securely anchor or fasten track to supporting structure at corners, ends, and spacings indicated on Shop Drawings.

B. Install joists bearing on supporting frame, level, straight, and plumb; adjust to final position, brace, and reinforce. Fasten joists to both flanges of joist track.
   1. Unless shown otherwise in drawings, install joists over supporting frame with a minimum end bearing of 1-1/2 inches (38 mm).
   2. Reinforce ends and bearing points of joists with web stiffeners, end clips, joist hangers, steel clip angles, or steel-stud sections as indicated on drawings.

C. Space joists not more than 2 inches (51 mm) from abutting walls, and as follows:
   1. Joist Spacing: As indicated.

D. Frame openings with built-up joist headers consisting of joist and joist track, nesting joists, or another combination of connected joists if indicated.
E. Install bridging at intervals indicated. Fasten bridging at each joist intersection as follows:
   1. Bridging: Joist-track solid blocking of width and thickness indicated, secured to joist webs.
F. Install miscellaneous joist framing and connections, including web stiffeners, closure pieces, clip angles, continuous angles, hold-down angles, anchors, and fasteners, to provide a complete and stable joist-framing assembly.

3.05 Field Quality Control

A. Testing: Owner will engage a qualified independent testing and inspecting agency to perform field tests and inspections and prepare test reports.
B. Field and shop welds will be subject to testing and inspecting.
C. Testing agency will report test results promptly and in writing to Contractor and Architect.
D. Remove and replace work where test results indicate that it does not comply with specified requirements.
E. Additional testing and inspecting, at Contractor's expense, will be performed to determine compliance of replaced or additional work with specified requirements.

3.06 Repairs And Protection

A. Galvanizing Repairs: Prepare and repair damaged galvanized coatings on fabricated and installed cold-formed metal framing with galvanized repair paint according to ASTM A 780 and manufacturer's written instructions.
B. Provide final protection and maintain conditions, in a manner acceptable to manufacturer and installer that ensures the cold-formed metal framing is without damage or deterioration at time of Substantial Completion.

END OF SECTION

DIVISION 5 – STRUCTURAL STEEL

SECTION 05500 – METAL FABRICATIONS

PART 1 – GENERAL

1.01 Section Includes
- A. Shop fabricated steel items.

1.02 Related Requirements
- A. Section 03 3000 - Cast-in-Place Concrete: Placement of metal fabrications in concrete.
- B. Section 04 2000 - Unit Masonry: Placement of metal fabrications in masonry.
- C. Section 05 1200 - Structural Steel Framing: Structural steel column anchor bolts.
- D. Section 05 2100 - Steel Joist Framing: Structural joist bearing plates, including anchorage.
- E. Section 05 3100 - Steel Decking: Bearing plates for metal deck bearing, including anchorage.
- F. Section 05 5100 - Metal Stairs.

1.03 Reference Standards
- A. For all reference standards listed below, comply with the version year in the governing building code adopted by the Authority Having Jurisdiction. For those reference standards that are not directly referenced by the building code, use the latest edition unless noted otherwise.
- B. ASTM A36/A36M - Standard Specification for Carbon Structural Steel.
- C. ASTM A53/A53M - Standard Specification for Pipe, Steel, Black and Hot-Dipped, Zinc-Coated, Welded and Seamless.
- D. ASTM A123/A123M - Standard Specification for Zinc (Hot-Dip Galvanized) Coatings on Iron and Steel Products.
- E. ASTM A283/A283M - Standard Specification for Low and Intermediate Tensile Strength Carbon Steel Plates.
- F. ASTM A307 - Standard Specification for Carbon Steel Bolts, Studs, and Threaded Rod 60 000 PSI Tensile Strength.
- G. ASTM A501/A501M - Standard Specification for Hot-Formed Welded and Seamless Carbon Steel Structural Tubing.
- H. ASTM F3125/F3125M - Standard Specification for High Strength Structural Bolts and Assemblies, Steel and Alloy Steel, Heat Treated, Inch Dimensions 120 ksi and 150 ksi Minimum Tensile Strength, and Metric Dimensions 830 MPa and 1040 MPa Minimum Tensile Strength.
- I. AWS A2.4 - Standard Symbols for Welding, Brazing, and Nondestructive Examination.
- J. AWS D1.1/D1.1M - Structural Welding Code - Steel.
- K. MPI #79 - Primer, Alkyd, Anti-Corrosive for Metal.
- L. SSPC-Paint 20 - Zinc-Rich Primers (Type I, "Inorganic," and Type II, "Organic").

SECTION 05500 – METAL FABRICATIONS

1.04 Submittals

A. See Section 01 3000 - Administrative Requirements, for submittal procedures.

B. Shop Drawings: Indicate profiles, sizes, connection attachments, reinforcing, anchorage, size and type of fasteners, and accessories. Include erection drawings, elevations, and details where applicable.

1. Indicate welded connections using standard AWS A2.4 welding symbols. Indicate net weld lengths.

2. Design data: Submit drawings and supporting calculations, signed and sealed by a qualified professional structural engineer.

a. Include the following, as applicable:

1) Design criteria.

2) Engineering analysis depicting stresses and deflections.

3) Member sizes and gauges.

4) Details of connections.

5) Support reactions.

6) Bracing requirements.

PART 2 – PRODUCTS

2.01 Materials - Steel

A. Steel Sections: ASTM A36/A36M.

B. Steel Tubing: ASTM A501/A501M hot-formed structural tubing.

C. Plates: ASTM A283/A283M.

D. Pipe: ASTM A53/A53M, Grade B Schedule 40, black finish.

E. Mechanical Fasteners: Same material as or compatible with materials being fastened; type consistent with design and specified quality level.

F. Bolts, Nuts, and Washers: ASTM A307, Grade A, plain.

G. Bolts, Nuts, and Washers: ASTM F3125/F3125M, Type 1, plain.

H. Welding Materials: AWS D1.1/D1.1M; type required for materials being welded.

I. Shop and Touch-Up Primer: As required below, complying with VOC limitations of authorities having jurisdiction.

1. Steel Exposed to Exterior Weather or an Uncontrolled Environment: Two-component, high performance, zinc-rich, aromatic urethane, compatible with topcoat and complying with SSPC-Paint 20.

2. Interior Steel: Fabricator's standard lead- and chromate-free, non-asphaltic, rust-inhibiting primer complying with MPI #79 and compatible with topcoat.

J. Touch-Up Primer for Galvanized Surfaces: SSPC-Paint 20, complying with VOC limitations of authorities having jurisdiction.

2.02 Fabrication

A. Fit and shop assemble items in largest practical sections, for delivery to site.

B. Fabricate items with joints tightly fitted and secured.

C. Grind exposed joints flush and smooth with adjacent finish surface. Make exposed joints butt tight, flush, and hairline. Ease exposed edges to small uniform radius.

D. Supply components required for anchorage of fabrications. Fabricate anchors and related components of same material and finish as fabrication, except where specifically noted otherwise.

2.03 Fabricated Items

A. Ledge Angles, Shelf Angles, Channels, and Plates Not Attached to Structural Framing: For support of metal decking and joists; prime paint finish.

B. Lintels: As detailed; prime paint finish.

C. Door Frames for Overhead Door Openings and Wall Openings: Channel sections; prime paint finish.

D. Elevator Hoistway Divider Beams: Beam sections; prime paint finish.

E. Toilet Partition Suspension Members: Steel channel sections; prime paint finish.

2.04 Finishes - Steel

A. Prime paint steel items.

1. Exceptions: Galvanize items to be embedded in concrete and items to be embedded in masonry.
2. Exceptions: Do not prime surfaces in direct contact with concrete, where field welding is required, and items to be covered with sprayed fireproofing.

B. Prepare surfaces to be primed in accordance with SSPC-SP3 for interior steel or SSPC-SP6 for all steel exposed to exterior weather or an uncontrolled environment.

C. Clean surfaces of rust, scale, grease, and foreign matter prior to finishing.

D. Prime Painting: One coat.

E. Galvanizing of Structural Steel Members: Galvanize after fabrication to ASTM A123/A123M requirements. Provide minimum 1.7 oz/sq ft galvanized coating.

F. Galvanizing of Non-structural Items: Galvanize after fabrication to ASTM A123/A123M requirements.

2.05 Fabrication Tolerances

A. Squareness: 1/8 inch maximum difference in diagonal measurements.

B. Maximum Offset Between Faces: 1/16 inch.

C. Maximum Misalignment of Adjacent Members: 1/16 inch.
D. Maximum Bow: 1/8 inch in 48 inches.
E. Maximum Deviation From Plane: 1/16 inch in 48 inches.

PART 3 – EXECUTION

3.01 Examination
A. Verify that field conditions are acceptable and are ready to receive work.
3.02 Preparation
A. Clean and strip primed steel items to bare metal where site welding is required.
B. Supply setting templates to the appropriate entities for steel items required to be cast into concrete or embedded in masonry.
3.03 Installation
A. Install items plumb and level, accurately fitted, free from distortion or defects.
B. Provide for erection loads, and for sufficient temporary bracing to maintain true alignment until completion of erection and installation of permanent attachments.
C. Field weld components as indicated on drawings.
D. Perform field welding in accordance with AWS D1.1/D1.1M.
E. Obtain approval prior to site cutting or making adjustments not scheduled.
F. After erection, prime welds, abrasions, and surfaces not shop primed, except surfaces to be in contact with concrete.
3.04 Tolerances
A. Maximum Variation From Plumb: 1/4 inch per story, non-cumulative.
B. Maximum Offset From True Alignment: 1/4 inch.
C. Maximum Out-of-Position: 1/4 inch.

END OF SECTION

DIVISION 6 - WOOD & PLASTIC

SECTION 06100 - ROUGH CARPENTRY

Part 1 - General

1.01 Work Included:
- A. All materials, labor, services and incidentals necessary for the completion of this section of the work.

1.02 Related Work Specified Elsewhere:
- A. Wood Treatment - Section 06300

1.03 Quality Assurance:
- A. Grades specified shall conform to the most recent grading rules as established by the following bureaus and associations.
  1. PS 20 - American Softwood Lumber Standard.
  2. Western Wood Products Association
  3. Southern Pine Inspection Bureau
- B. Grade and trade mark each piece of lumber or bundle on bundled stock. Use only the recognized official marks of association under whose rules it is graded. Grade and trade marks will not be required if each shipment is accompanied by certificate of inspection issued by grading association.

1.04 Submittals:
- A. Product Data: for each type of process and factory-fabricated product. Indicate component materials and dimensions and include construction and application details.
  1. Include data for wood preservative treatment from chemical treatment manufacturer and certification by treating plant that treated materials comply with requirements. Indicate type of preservative used, net amount of preservative retained, and chemical treatment manufacturer’s written instructions for handling, storing, installing and finishing treated material.
  2. As requested by authorities having jurisdiction include data for fire-retardant treatment from chemical treatment manufacturer and certification by treating plant that treated materials comply wit requirements. Include physical properties of treated materials both before and after exposure to elevated temperatures when tested according to ASTM D5516 and ASTM D 5664.
  3. Include copies of warranties from chemical treatment manufacturers for each type of treatment.

4. Research / evaluation reports – for the following, showing compliance with building code in effect for Project:
   a. Fire-retardant treated wood.
   b. Power-driven fasteners.
   c. Power-actuated fasteners.
   d. Expansion anchors.
   e. Metal framing anchors.

1.05 Delivery, Storage and Handling:

A. Stack lumber, plywood, sheathing, and other materials: provide spacers between each bundle to provide air circulation around bundled material. Provide proper air circulation between stacks and under coverings.

Part 2 - Products

2.01 General:

A. Provide best quality of respective grades and kinds. Lumber and plywood shall be produced from wood obtained from forests certified by an FSC-accredited certification body to comply with FSC STD-01-001, “FSC Principles and Criteria for Forest Stewardship”. Factory mark each piece of lumber with grade stamp of grading agency.

B. Maximum moisture content of lumber 19%.

C. Provide dressed lumber (S4S) unless otherwise indicated.

D. Where nominal sizes are indicated, provide actual sized required by DOC PS 20 for moisture content specified. Where actual sizes are indicated, they are minimum dressed sizes for dry lumber.

2.02 Grades and Applications of Lumber:

A. Framing lumber for the following shall be "Standard" grade Douglas Fir (WCLIB or WWPA).
   1. Concealed blocking/nailers, cants, grounds, and miscellaneous wood items used in conjunction with the roofing work and as indicated on the Drawings.
   2. Provide dimension lumber of grades indicated according to the American Lumber Standards Committee National Grading Rule provisions of the Grading Agency indicated.

2.03 Fire-retardant Treated Materials:

A. General – where fire-retardant treated materials are required by authorities having jurisdiction, provide materials that comply with performance requirements in AWPA C20 (lumber) and AWPA C27 (plywood). Identify fire-retardant treated wood with appropriate classification

marking of UL, U.S. Testing, Timber Products Inspection, or another testing and inspecting agency acceptable to authorities having jurisdiction.

2.04 Panel Products:

A. Miscellaneous Concealed Plywood: shear wall sheathing, span rating to suit framing in each location, and thickness indicated. Refer to Structural Drawings.

B. Telephone and Electrical Equipment Backing Panels: DOC PS 1, C-D Plugged, fire-retardant treated, in thickness indicated, or if not indicated, not less than ½ inch thick.

2.05 Fasteners:

A. All nails, spikes, bolts, connectors and other fasteners used in connections with this work shall be galvanized.

1. Nails, wire, brads and staples – FS-FF-N-105.
2. Power-driven Fasteners – CABO NER-272.
3. Wood screws – ASME B18.6.1.
4. Screws for fastening to cold formed metal framing: ASTM C954 length as recommended by screw manufacturer for material to be fastened.
5. Lag bolts – ASME B18.2.1.
6. Bolts – steel bolts complying with ASTM A 307, Grade A with ASTM C563 hex nuts and, where indicated, flat washers.
7. Expansion anchors – anchor bolt and sleeve assembly of material indicated below with capability to sustain, without failure, a load equal to 4 times the load imposed when installed in concrete as determined by testing per ASTM E 488 conducted by a qualified independent testing and inspecting agency.
   a. Material for interior applications: carbon steel components, zinc plated to comply with ASTM B 633, Class Fe/Zn 5.
   b. Material for exterior applications: stainless steel with bolts and nuts complying with ASTM F 593 and ASTM F 594, alloy group 1 or 2.

2.06 Metal Framing Anchors:

A. General: provide galvanized steel framing anchors of structural capacity, type, and size indicated and acceptable to authorities having jurisdiction.

B. Galvanized Steel Sheet: hot-dip, zinc-coated steel sheet complying with ASTM A 653/A 653M, G60 coating designation.

SECTION 06100 - ROUGH CARPENTRY

Part 3 - Execution

3.01 Sizes and Applications (General Framing):

A. Members shall be accurately cut and fitted, true to line and level, avoiding shims and wedges as much as possible. Discard material with defects that impair quality of carpentry and that are too small to use with minimum number of joints or optimum joint arrangement.

B. Where applicable, apply field treatment complying with AWPA M4 to cut surfaces of preservative-treated lumber and plywood.

C. At wood ground, blocking and nailer installation: install where indicated and required for attaching other work. Form to shapes indicated and cut as required for true line and level of attached work. Coordinate locations with other work involved.

D. Attach items to substrates to support applied loading. Recess bolts and nuts flush with surfaces, unless noted otherwise.

3.02 Rough Hardware:

A. Provide all sufficient nails, screws, etc. to insure rigidity and structural soundness. Provide hot-dipped galvanized fasteners at all weather exposed locations.

B. Spiking and nailing shall be done using largest size spikes and nails practicable and as indicated on the drawings. Securely attach carpentry according to applicable codes and recognized standards.

C. Bolt nailers and blocking to steel or concrete members with bolts of proportionate strength of members attached, length required, spaced 4'-0" o.c. maximum and 4" from each end, except as otherwise indicated. Countersink fastener heads on exposed carpentry work and fill holes with wood fiber.

D. Predrill members when necessary to avoid splitting of wood.

3.03 Panel Product Installation:

A. Wood structural panels: comply with applicable recommendations contained in APA Form No. E30K, “APA Design/Construction Guide: Residential and Commercial”, for types of structural-use panels and applications indicated. Comply with “Code Plus” provisions in above referenced guide.

End of Section

SECTION 06200 - FINISH CARPENTRY

Part 1 - General

1.01 Work Included:
- A. All materials, labor, services and incidentals necessary for the completion of this section of the work.
- B. The erection of wall and partition wood finish materials, installation of door and hardware, and shelving incidentals necessary to finish the carpentry.

1.02 Related Work Specified Elsewhere:
- A. Wood Doors - Section 08200
- B. Hardware and Specialties - Section 08700

1.03 Quality Assurance:
- A. Standards:
  1. Architectural Woodwork Institute:
     a. Architectural Woodwork Quality Standards.
  2. National Electrical Manufacturers Association:
     a. NEMA Publication LD-1.
  3. Western Wood Products Association:
     a. Standard Grading Rules for Western Lumber.
  4. American Plywood Association:

1.05 Product Delivery, Storage and Handling:
- A. All finish materials, trim, etc. shall be inspected to insure that no sub-grade, defective, or machine-marked pieces are installed.

Part 2 - Products

2.01 General:
- A. Grades specified shall conform to the most recent grading rules of the association or bureau under whose rules the lumber is produced.
- B. Quality standards specified shall conform to the latest edition of the Architectural Woodwork Institute's "Quality Standards".
- C. Lumber shall be kiln-dried to 10% to 12% moisture content which shall be maintained during the fabrication of millwork and cabinetry.

Part 3 - Execution

3.01 Miscellaneous Trim and Frames:
- A. Install all trim in longest possible lengths. Stagger joints in adjacent member. Cope at returns and miter at corners. Attach securely in place with fine finishing nails where exposed; set for filling.

B. Immediately prior to final inspection of building, the contractor shall repair or replace all millwork or cabinetry items which have been damaged in any way.

End of Section

DIVISION 6 - WOOD & PLASTIC

SECTION 06300 - WOOD TREATMENT

Part 1 - General

1.01 Work Included:
- A. All materials, labor, services and incidentals necessary for the completion of this section of the work.

1.02 Quality Assurance:
- A. Standards:
  - 1. American Wood Preservers Association:
    - a. AWPA Standard P-5 (Preservative)
    - b. AWPA Standard Commodity Standards (Treating Process).
  - 2. Federal Specifications:
    - a. TT-W-550 (Preservative).
    - b. TT-W-571 (Treating Process).
- B. All lumber and plywood receiving wood treatment shall bear the trademark of the process used.
- C. Submit certificate and guarantee of the lumber treated.

Part 2 - Products

2.01 Materials:
- A. Description: Waterborne chemical salts intended for pressure impregnation as a wood preservative. Preservatives with a petroleum vehicle are not permitted.

Part 3 - Execution

3.01 Installation:
- A. Location of treated lumber:
  - 1. All blocking, plates, nailers and curbs used in conjunction with gravel guards, roof edges and all other wood components used in the roofing project.
- B. Materials shall be pressure treated in accordance with the standards of the American Wood Preservers Institute and the chemical manufacturer's specifications.
- C. Treated material shall conform to AWPB LD-2 and treated to a maximum retention of 0.23 pound of oxide per cubic foot.
- D. Moisture content of finish products shall not exceed 19%.

End of Section

DIVISION 6 - WOOD & PLASTICS

SECTION 06410 - CUSTOM CASEWORK

Part 1 - General

1.01 Section Includes:
- A. Special fabricated cabinet units as indicated on drawings.
- B. Countertops.
- C. Hardware
- D. Preparation for site finishing.
- E. Preparation for installing utilities.
- F. Related Documents: The Contract Documents apply to the Work of this Section. Additional requirements and information necessary to complete the Work of this Section may be found in other Documents.
- **G. NOTE: FRAMELESS CABINETS / EUROPEAN CONSTRUCTION SYLE CABINETS ARE ACCEPTABLE. Provide proposed details, etc. during shop drawing submittal phase for approval by Architect.**

1.02 Related Sections:
- A. Section 06100-Rough Carpentry: Grounds and support framing.
- B. Section 06200-Finish Carpentry: Related trim not specified in this section.
- C. Section 09900- Paints and Coatings: Finishing cabinet exterior and interior where applicable.

1.03 References:
- A. ANSI/BHMA A156.9-Cabinet Hardware.
- B. AWI-Quality Standards
- C. FS L-F 508-Plastic Sheet, Laminated, Decorative and non-Decorative.
- D. FS MM-L-736-Lumber, Hardware.
- E. FS MMM-A- 130-Adhesive, Contact.
- F. NEMA LD-3-High Pressure Decorative laminates.
- G. PS 1-Construction and Industrial Plywood.
- H. PS 20-American Softwood Lumber Standard.
- I. PS 51-Hardwood and Decorative Ply.

1.04 Submittals:
- A. Shop Drawings: Indicated materials, component profiles and elevations, assembly methods, joint details, fastening methods, accessory listings, hardware location, and schedule of finishes.

1.05 Quality Assurance: Perform work in accordance with AWI Custom quality.

1.06 Qualifications: Manufacturer: Company specializing in manufacturing the products specified in this section with minimum three years of experience.

1.07 Delivery, Storage, and Handling:
- A. Protect units from moisture damage.

B. Store materials in ventilated, interior locations under constant, minimum temperatures of 60 degrees F. And maximum relative humidity of 55 percent.

1.08 Field Measurements: Verify that field measurements are as indicated on shop drawings.

1.09 Coordination: coordinate work with plumbing and electrical rough-in.

Part 2 - Products

2.01 Wood Materials:

A. Softwood Lumber:PS20; graded in accordance with AWI Custom; average moisture content of 6 percent; species and grades as follows:

Item	Species	Cut
Cabinet Frame	Douglas Fir	Economy
Internal Construction	Douglas Fir	Economy
Miscellaneous framing	Douglas Fir	Economy
Sub-Tops	Douglas Fir	Economy

B. Hardwood Lumber FS MM-L-736; graded in accordance with AWI Custom; average moisture content of 6 percent; species and grade as follows:

Item	Species	Cut
Exposed Stiles and Rails	Red Oak	Economy
Miscellaneous Trim	Red Oak	Economy

2.02 Sheet Materials:

A. Softwood Plywood: PS 1; graded in accordance with; core material of veneer or lumber, species and cut as follows:

Item	Face	Cut
Drawer Construction	Douglas Fir	Economy
Gables and Backs	Douglas Fir	Custom
Sub-tops	Douglas Fir	Economy
Non-sight exposed shelving	Douglas Fir	Custom
Miscellaneous	Douglas Fir	Custom

B. Hardwood Plywood: PS 51; AM graded in accordance with AWI; core material for veneer or lumber; type of glue recommended for application; face veneer and cuts as follows:

SECTION 06410 - CUSTOM CASEWORK

Item	Face Species	Cut
Door and Drawer Fronts	Red Oak	Economy
Drawer Construction	Red Oak	Economy
Gable and Backs	Red Oak	Economy

C. Wood Particles-PS 1;AM standard, composed of wood= chips, medium density, made with high waterproof resin binders; of grade to suit application; sanded faces, located as follows:

Item
Drawer Construction

D. Hardboard: Pressed wood fiber with resin binder, tempered grade, 1/4 inch thick, smooth one side, located as follows:

Item
Drawer Bottoms

2.03 Laminated Materials: Plastic Laminated: NEW LD-T; 00550 inch General Purpose Grade; suede surface finish, color and pattern as selected by Architect. All sight exposed surfaces (excluding countertops and backsplash) for cabinets to be laminate finished.

2.04 Accessories:

A. Adhesive: FS MMM-A-130 contact adhesive, water base type, recommended by laminate manufacturer to suit application.

B. Fasteners: Size and type to suit application.

C. Bolts, Nuts, Washers, Lags, Pins and Screws: Of size and type to suit application; galvanized finish in concealed locations and cadmium plated finish in exposed locations.

D. Concealed Joint Fasteners: Threaded steel.

E. Lumber for Shimming, Blocking, and Miscellaneous Applications: Softwood lumber of Douglas Fir species.

F. Primer. Alkyd primer sealer type.

G. Wood filler: Solvent base, tinted to match surface finish color.

H. Plastic Grommets: provide at openings in countertop as indicated on the Drawings. Color to be “black”.

2.05 Architectural Cabinet Solid Surface Tops (Countertops):

A. Design Load: deflection limited to 1/360.

B. Type of Top: homogeneous solid sheets of filled plastic resin complying with the following:

1. Colors and Patterns: as selected by Architect from manufacturer’s full range.
2. Special Features: eased edge treatment.
3. Accessories:

a. Adhesives: for seams and drop edges, Formica Solid Surfacing Seaming Cartridges, 9 ounce, color to blend with sheet material.

4. Fabrication: assemble work at shop and deliver to job ready for installation. Manufacture in largest practical pieces for handling and shipping without seams.
   a. Fabricate work square and to required lines.
   b. Recess and conceal fasteners connections and reinforcing.
   c. Design, construction, and installation: details to allow for expansion and contraction of materials. Properly install material with hairline joints held rigidly in place.
   d. Fabricate countertops and vanities with back splash and side splash pieces to profiles and sizes indicated.
   e. Fabricate items to profiles shown with connections and supports as indicated or as required for complete installation in accordance with manufacturer's written instruction sand approved submittals.
   f. Provide cut-outs for plumbing fixtures and trim, washroom accessories, appliances, and related items: confirm layout with manufacturer's cut-out templates before beginning work. Round corners of cut-outs and sand edges smooth.
   g. Do not exceed manufacturer's recommended unsupported overhang distances.
   h. Finish exposed surfaces smooth and polish to low sheen.
   i. Radius corners and edges.
   j. Tolerances: variations in size or openings shall not exceed +/-1/4".
5. Acceptable manufacturer: Formica Solid Surfacing as manufactured by Formica Group / Fabrications, Cincinnati, Ohio **or approved equal**.

2.06 Factory Finishing of Interior Architectural Woodwork:

A. Quality Standard: Comply with AWI Section 1500 unless otherwise indicated.

B. The finish of custom casework is included under this Section, regardless of whether factory applied or applied after installation.

C. Preparations for Finishing: Comply with referenced quality standard for sanding, filling countersunk fasteners, sealing concealed surfaces and similar preparations for finishing of

custom casework, as applicable to each unit of work.

D. Factory Finishing: The extent to which the final finish is applied to architectural woodwork a factory is Contractor's option, except factor apply at least prime/base coat to the greatest extent possible before delivery.

E. Transparent finish for Open-Grain Woods: Comply with requirements indicated below for grade Finish system, staining, effect, and sheen, with sheen measured on 60 degree gloss meter per ASTM D 523.
   1. Grade: Custom
   2. AWI Finish System No. 5: Catalyzed polyurethane.
   3. Staining: Match Architect=s sample.
   4. Effect: Closed grain (filled finish).
   5. Sheen: Medium-gross ribbed effect 35-45 deg.

F. Transparent Finish for Closed-grain Woods: Comply with requirements indicated below for grade, finish system staining, effect, and sheen.
   1. Grade: Custom
   2. AWI Finish System No. 5: Catalyzed polyurethane.
   3. Staining: Match Architect's sample.
   4. Effect: Closed grain.
   5. Sheen: Medium-gloss rubbed effect 35-45 deg.

2.07 Fabrication:

A. Shop assemble casework for delivery to site in units easily handled and to permit passage through building openings.

B. Fit shelves, doors and exposed edges with 3/8 inch matching hardwood edging. Use full length pieces only.

C. Cap exposed plastic laminate finish edges with material of same finish and pattern.

D. Door and Drawer Fronts: 3/4 inch thick; overlay style.

E. When necessary to cut and fit on site, provide materials with ample allowance for cutting. Provide trim for scribing and site cutting.

F. Apply plastic laminate finish in full uninterrupted sheets consistent with manufactured sizes. Fit corners and joints hairline; secure with concealed fasteners. Slightly bevel arises. Locate counter butt joints minimum 2 feet from sink cut-outs.

G. Mechanically fasten back splash to countertops with sleet brackets at 16 inches on center.

H. Provide cutouts for plumbing fixtures, inserts, appliances, outlet boxes; and fixtures and fitting. Verify locations of cutouts from on-site dimensions. Prime paint contact surfaces of cut edgy.

2.08 Finishing:

A. Sand work smooth and set exposed nails and screw.
B. Apply wood filler in exposed nail (and screw) indentations.
C. On items to receive transparent finishes, use wood filler which matches surrounding surfaces and of types recommended for applied finishes.
D. Seal, stain and varnish exposed to view surfaces. Brush apply only.
E. Seal and varnish internal exposed to view and semi-concealed surfaces. Brush apply only.
F. Seat internal surfaces of cabinets with one coat of shellac. Brush apply only.
G. Seal surfaces in contact with cementitious materials.

2.09 Hardware:

A. Shelf Standard and Supports: KV-256 and KV-255.
B. Drawer and Door Pulls: Chrome, U-shaped wire pulls.
C. Cabinet Locks: Keyed cylinder, two keys per lock, master keyed.
D. Catches: Magnetic, Stanley SF-45 and SP-46. Provide other types required for special conditions.
E. Drawer Slides: Knape and Vogt: KV1284 typical withKV1485 full extension ball bearing tracks.
F. Hinges: Blum Model 170-concealed hinges with 170 degree opening or Grass System 1200 (176 degree opening) self-closing with 1000-80 base plate. Two hinges per door up to 36" and 3 hinges per door up to 48" and 4 per door up to 60" high.
G. Grommets: Provide plastic grommets at all penetrations through countertop for cabling, power cords, etc. as indicated on the Drawings.

Part 3 - Execution

3.01 Examination: Verify adequacy of backing and support framing.

3.02 Installation:

A. Install woodwork to comply with AWI Section 1700 for same grade specified above for type of casework involved.
B. Set and secure casework in place; rigid, plumb, and level.
C. Use fixture attachments in concealed locations for waif mounted components.
D. Use concealed joint fasteners to align and secure adjoining cabinet units and counter tops.
E. Carefully scribe casework abutting other components, with maximum gaps of 1/32 inch. Do not use additional overlay trim for this purpose.
F. Secure cabinet and counter bases to floor using appropriate

angles and anchorages.

G. Countersink anchorage devices at exposed locations. Conceal with solid wood plugs of species to match surrounding wood; finish flush with surrounding surfaces.

H. Install without distortion so that doors and drawers fit openings properly and are accurately aligned.

I. Adjust hardware to center doors and drawers in openings and to provide unencumbered operation. Complete the finishing work specified in this section to whatever extent not completed at shop or before installation of woodwork.

J. Complete the finishing work specified in this section to whatever extent not completed at shop or before installation of woodwork,

3.03 Adjusting:

A. Adjust moving or operating parts to function smoothly and correctly.

3.04 Cleaning:

A. Clean casework, counters, shelves, hardware, fittings and fixtures.

3.05 Schedules:

A. Furnish and install all items listed in this schedule at location indicated on the Drawings, complete as to function intended.

B. Casework indicated on the Drawings; custom grade construction.

1. Counter Tops.
2. Base Cabinets.
3. Overhead Cabinets.
4. Wall Cabinets.
5. Shelving-adjustable and fixed.
6. Other items such as shims and fillers as indicated on the Drawings or as required for a complete cabinetwork installation.

END OF SECTION

SECTION 06420 - CUSTOM LAMINATE CASEWORK (CONTRACTOR OPTION)

PART 1 – GENERAL

1.01 SECTION INCLUDES

A. Fixed modular laminate clad casework and components.
B. Flexible rail mounted laminate clad casework and components.
C. Solid Surface countertops and backsplash.

1.02 RELATED SECTIONS

A. Blocking within walls where indicated: Section 06100 Rough Carpentry.
B. Millwork, trim, etc.: Section 06200 Finish Carpentry.
C. Hardware: Section 06410 Custom Casework.
D. Glass: not applicable.
E. Base molding: Division 9.
F. Appliances: Division 11 and drawings.
G. Sinks and service fixtures, service waste lines, connections, and vents: Division 15.
H. Electrical service fixtures: Division 16.

1.03 DEFINITIONS

A. Identification of casework components and related products by surface visibility.
    1. Open Interiors: Any open storage unit without solid door or drawer fronts, units with full glass insert doors and/or acrylic doors, and units with sliding solid doors.
    2. Closed Interiors: Any closed storage unit behind solid door or drawer fronts.
    3. Exposed Ends: Any storage unit exterior side surface that is visible after installation.
    4. Other Exposed Surfaces: Faces of doors and drawers when closed, and tops of cabinets less than 72 inches above furnished floor.
    5. Semi-Exposed Surfaces: Interior surfaces which are exposed to view when doors or drawers are opened, bottoms of wall cabinets and tops of cabinets 72 inches or more above finished floor.
    6. Concealed Surfaces: Any surface not visible after installation.

1.04 QUALITY ASSURANCE

A. Manufacturer: Minimum of 5 years experience in providing manufactured casework systems for similar types of projects, produce evidence of financial

stability (if requested), bonding capacity, and adequate facilities and personnel required to perform on this project.

B. Manufacturer: Provide products certified as meeting or exceeding ANSI-A 161.1-2000 testing standards.

C. Single Source Manufacturer: Casework, countertops and architectural millwork products must all be engineered and built by a single source manufacturer in order to ensure consistency and quality for these related products. Splitting casework, countertops and/or architectural millwork between multiple manufacturers will not be permitted.

D. Quality Standard: Unless otherwise indicated, comply with AWI's Architectural Woodwork Quality Standards for grades of interior architectural woodwork, construction, finishes and other requirements.

1.05 SUBMITTALS

A. Comply with Special Conditions, unless otherwise indicated.

B. Product Data: Manufacturer's catalog with specifications and construction details.

C. Shop Drawings: Indicate dimensions, description of materials and finishes, general construction, specific modifications, component connections, anchorage methods, hardware, and installation procedures, plus the following specific requirements.
   1. Include section drawings of typical and special casework, work surfaces and accessories.
   2. Indicate locations of plumbing and electrical service field connection by others.
   3. Provide one set of shop drawings which includes all products within this section, engineered and built by a single source manufacturer, with seamless coordination amongst all products.

D. Casework Samples (To be available upon request):
   1. Base cabinet: Cabinet conforming to specifications, with drawer and door.
   2. Wall cabinet: Cabinet conforming to specifications, with door.
   3. Cabinet samples shall be complete with specified hardware for doors, drawers and shelves.
   4. Component samples: Two sets of samples for each of the following:

a. Decorative laminate color charts / PVC and ABS edgings.

1.06 PRODUCT HANDLING

A. Deliver completed laminate clad casework, countertops, and related products only after wet operations in building are completed, store in ventilated place, protected from the weather, with relative humidity range of 25 percent to 55 percent.

B. Protect finished surfaces from soiling and damage during handling and installation with a protective covering.

1.07 JOB CONDITIONS

A. Environmental Requirements: Do not install casework until permanent HVAC systems are operating and temperature and humidity have been stabilized for at least 1 week.

1. Manufacturer/Supplier shall advise Contractor of temperature and humidity requirements for architectural casework installation areas.
2. After installation, control temperature and humidity to maintain relative humidity between 25 percent and 55 percent.

B. Conditions: Do not install casework until interior concrete work, masonry, plastering and other wet operations are complete.

1.08 WARRANTY

A. All materials and workmanship covered by this section will carry a five (5) year warranty from date of acceptance.

PART 2 – PRODUCTS

2.01 ACCEPTABLE MANUFACTURERS:

A. Manufacturer – Basis for Design:

1. TMI Systems Corporation.
   a. Specifications are based on manufacturer’s literature from TMI SYSTEMS CORPORATION, 50 South Third Avenue West, Dickinson, North Dakota, 58601, Phone: 800-456-6716, fixed modular, flexible rail mounted, and mobile casework and accessories.

b. Other manufacturers shall comply with the minimum levels of material and detailing indicated on the drawings or as specified.

2.02 MATERIALS

A. Core Materials:
   1. Particleboard up to 7/8 inch thick: Industrial Grade average 45-pound density particleboard, ANSI A 208.1-2009, M-2 requirements.
   2. Particleboard 1 inch thick and thicker: Industrial Grade average 45-pound density particle-board, ANSI A 208.1-2009, M-2 requirements.
   3. Medium Density Fiberboard 1/4 inch thick: Minimum average density 45-50 lbs., ANSI A208.2-2009 requirements.
   4. MR Moisture Resistant Particleboard: Average 45-pound density particleboard, ANSI A208.1 1-2009, M-2 requirements.
   5. Toe Base Plywood: 3/4 inch thickness, CC/CD/CDC grades, of western softwood veneers, with NAUF exterior fully water resistant phenolic glues.

B. Decorative Laminates: GREENGUARD Indoor Air Quality Certified
   1. High-pressure decorative laminate VGS (.028), NEMA Test LD 3-2005.
   2. High-pressure decorative laminate HGS (.048), NEMA Test LD 3-2005.
   3. High-pressure decorative laminate HGP (.039), NEMA Test LD 3-2005.
   4. High-pressure cabinet liner CLS (.020), NEMA Test LD 3-2005.
   5. High-pressure backer BKH (.048), (.039), (.028), NEMA Test LD3-2005.
   6. Thermally fused melamine TFM laminate, NEMA Test LD 3-2005. (TFM allowed on casework interiors only, as specified below. Utilization of TFM on any exterior casework surfaces, including door and drawer faces and finished ends, will not be permitted.)

C. Laminate Color Selection: Maximum 1 color per unit face and 5 colors per project. (See Color Selection in section 3.05).

D. Edging Materials:
   1. 1mm PVC banding, machine applied.

2. 3mm PVC banding, machine applied and machine profiled to 1/8 inch radius.

E. Glass:
Not applicable.

2.03 SPECIALTY ITEMS

A. Support Members:
1. Countertop support brackets: Epoxy powder coated, 11 gauge steel with integral cleat mount opening and wire management opening.
2. Undercounter support frames: Epoxy powder coated.
3. Legs: Epoxy powder coated.

2.04 CABINET HARDWARE

F. Refer to Section 06410 Custom Casework for cabinet hardware.

2.05 FABRICATION:

A. Fabricate casework, countertops and related products to dimensions, profiles, and details shown.

B. All casework panel components must go through a supplemental sizing process after cutting, producing a panel precisely finished in size and square to within 0.010 inches, ensuring strict dimensional quality and structural integrity in the final fabricated product.

C. Cabinet Body Construction:
1. Tops and bottoms are glued and doweled to cabinet sides and internal cabinet components such as fixed horizontals, rails and verticals. Minimum 6 dowels each joint for 24 inch deep cabinets and a minimum of 4 dowels each joint for 12 inch deep cabinets. (Mechanical or metal hardware fasteners joining cabinet top and bottom panels to the sides will not be accepted.)
a. Tops, bottoms and sides of all cabinets are particleboard core.
2. Cabinet backs: 1/4 inch thick medium density fiberboard panel fully captured by the cabinet top, bottom and side panels. Finish to match cabinet interior. 3/4 inch x 4 inch particleboard rails will be placed behind the back panel at the top and bottom, and doweled to the sides utilizing 10mm hardwood fluted dowels. A third intermediate rail will be included on all cabinets taller than 56 inches. Utilize hot melt

glue to further secure back and increase overall strength.

a. Exposed back on fixed or movable cabinets: 3/4 inch thick particleboard with the exterior surface finished in VGS laminate as selected.

3. Fixed base and tall units have an individual factory-applied base, constructed of 3/4 inch thick plywood. Base is 102mm (nominal 4 inch) high unless otherwise indicated on the drawings.
4. Base units, except sink base units: Full sub-top glued and doweled to cabinet sides. (Mechanical or metal hardware fasteners joining cabinet sub-top panel to the sides will not be accepted.)
   a. Sink base units are provided with open top and a stretcher at the front, attached to the sides. Back to be split removable access panel.
5. Side panels and vertical dividers shall receive adjustable shelf hardware at 32mm line boring centers. Mount door hinges, drawer slides and pull-out shelves in the line boring for consistent alignment.
6. Exposed and semi exposed edges.
   a. Edging: 1mm PVC machine applied.
7. Adjustable Shelves in Cabinets
   a. Core: Particleboard.
   b. Core Thickness: 3/4 inch up to 30 inches wide, 1 inch over 30 inches wide.
   c. Edge: 1mm PVC on Front Edge Only.
8. Interior finish, units with open Interiors:
   a. Top, bottom, back, sides, horizontal and vertical members, and adjustable shelving faces with TFM Thermally Fused Melamine laminate.
9. Interior finish, units with closed Interiors:
   a. Top, bottom, back, sides, horizontal and vertical members, and adjustable shelving faces with TFM Thermally Fused Melamine laminate.
10. Exposed ends:
    a. Faced with high-pressure decorative VGS laminate. Use of TFM on exposed ends will not be permitted.
11. Wall unit bottom:

a. Faced with thermally fused melamine laminate.

12. Balanced construction of all laminated panels is mandatory. Unfinished core stock surfaces, even on concealed surfaces (excluding edges), are not permitted.

D. Drawers:
1. Sides, back and sub front: Minimum 1/2 inch thick particleboard, laminated with TFM Thermally Fused Melamine doweled and glued into sides. Top edge banded with 1mm PVC.
2. Drawer bottom: Minimum 1/2 inch thick particleboard laminated with TFM Thermally Fused Melamine, screwed directly to the bottom edges of drawer box.
3. Paper storage drawers: Minimum 3/4 inch thick particleboard sides, back, and sub front laminated with TFM Thermally Fused Melamine. Minimum 1/2 inch thick particleboard drawer bottoms screwed directly to the bottom edges of the drawer box. Provide PVC angle retaining bar at the rear of the drawer.

E. Door/Drawer Fronts:
1. Core: 3/4 inch thick particleboard.
2. High-pressure decorative VGS laminate exterior, balanced with high-pressure cabinet liner CLS. Use of TFM on exterior or interior surfaces of door/drawer fronts will not be permitted.
3. Edges: 3mm PVC, machine applied, external edges and outside corners machine profiled to 1/8 inch radius.
4. Provide double doors in opening in excess of 24 inches wide.

F. Door Fronts with Glass Insert captured by Retainer Clips (CUSTOM GRADE):
1. Core: 3/4 inch thick particleboard.
2. High-pressure decorative VGS laminate exterior, balanced with high-pressure VGS laminate. Use of TFM on exterior or interior surfaces of door fronts will not be permitted.
3. Edges: 3mm PVC, machine applied, external edges and outside corners machine profiled to 1/8 inch radius.

4. Provide cutout in door panel resulting in 3-3/8 inch frame. Exposed cutout edge to be finished with 1mm PVC edgebanding.
5. Notch cutout 3/8 inch x 1/4 inch for glass panel to set into, mounting flush with the back side (interior side) of the door panel. Interior cutout edge to be painted a compatible color to the interior surface.
6. Glass panel to be captured and held in place utilizing glass retainer clips, screwed in place. Minimum eight clips per glass panel located in the four corners of the cutout.

G. Miscellaneous Shelving (not in Cabinets):
1. Core material: 1 inch thick particleboard.
2. High-pressure decorative VGS laminate on both faces.
3. Edges: 3mm PVC, external edges and outside corners machine profiled to 1/8 inch radius.

2.06 ARCHITECTURAL CABINET SOLID SURFACE TOPS (Countertops):

A. Design Load: deflection limited to 1/360.

B. Type of Top: homogeneous solid sheets of filled plastic resin complying with the following:

1. Colors and Patterns: as selected by Architect from manufacturer’s full range.

2. Special Features: eased edge treatment.

3. Accessories:

a. Adhesives: for seams and drop edges, Formica Solid Surfacing Seaming Cartridges, 9 ounce, color to blend with sheet material.

4. Fabrication: assemble work at shop and deliver to job ready for installation. Manufacture in largest practical pieces for handling and shipping without seams.

a. Fabricate work square and to required lines.

b. Recess and conceal fasteners connections and reinforcing.

c. Design, construction, and installation: details to allow for expansion and contraction of materials. Properly install material with hairline joints held rigidly in place.

d. Fabricate countertops and vanities with back splash and side splash pieces to profiles and sizes indicated.

e. Fabricate items to profiles shown with connections and supports as indicated or as required for complete installation in accordance with manufacturer's written instruction sand approved submittals.

f. Provide cut-outs for plumbing fixtures and trim, washroom accessories, appliances, and related items: confirm layout with manufacturer's cut-out templates before beginning work. Round corners of cut-outs and sand edges smooth.

g. Do not exceed manufacturer's recommended unsupported overhang distances.

h. Finish exposed surfaces smooth and polish to low sheen.

i. Radius corners and edges.

j. Tolerances: variations in size or openings shall not exceed +/-1/4".

5. Acceptable manufacturer: Formica Solid Surfacing as manufactured by Formica Group / Fabrications, Cincinnati, Ohio **or approved equal**.

PART 3- EXECUTION

3.01 INSPECTION:

A. The casework contractor must examine the job site and the conditions under which the work under this section is to be performed and notify the building owner in writing of unsatisfactory conditions. Do not proceed with work under this Section until satisfactory conditions have been corrected in a manner acceptable to the installer.

3.02 PREPARATION:

A. Condition casework to average prevailing humidity conditions in installation areas prior to installing.

3.03 INSTALLATION:

A. Erect casework, plumb, level, true and straight with no distortions. Shim as required. Where laminate clad casework abuts other finished work, scribe and cut to accurate fit.

B. Adjust casework and hardware so that doors and drawers operate smoothly without warp or bind.

C. Repair minor damage per plastic laminate manufacturer's recommendations.

3.04 CLEANING:

A. Remove and dispose of all packing materials and related construction debris.

B. Clean cabinets inside and out. Wipe off fingerprints, pencil marks, and surface soil etc., in preparation for final cleaning by the building owner.

3.05 COLOR SELECTION:

A. Laminate Color Selection:

1. Select from the full range of standard Wilsonart® and Formica® stock color charts.
2. Thermally fused melamine laminate matched to White color.

B. Hardware Color Selection:

1. Hinge: Select from your choice of epoxy powder coating stock colors matched to White, Beige, Gray, Black and Chrome.
2. Pulls: Select from design specific finish options available in the TMI Vendor Stock Pull Program.
3. Miscellaneous Hardware (support brackets, metal components, etc.): Select from your choice of epoxy powder coating stock colors matched to White, Beige, Gray, Black and Chrome.

C. PVC Edge Banding Color Selection:

1. 3mm PVC: Select from the TMI Vendor Stock PVC Program, including over 200 pattern, woodgrain and solid colors matched to Wilsonart® and Formica® laminates.
2. 1mm PVC: Select from the TMI Vendor Stock PVC Program, including over 200 pattern, woodgrain

and solid colors matched to Wilsonart® and Formica® laminates.

End of Section

DIVISION 7 -THERMAL & MOISTURE PROTECTION

SECTION 07100 - WATERPROOFING

Part 1 - General

1.01 Work Included:
- A. All materials, labor, services and incidentals necessary for the completion of this section of the work.

1.02 Quality Assurance:
- A. Standards:
  - 1. Federal Specifications:
    - a. SS-C-153B, Cement, Bituminous, Plastic.
    - b. SS-A-701B, Asphalt, Weatherproofing.
    - c. LLL-1-535A, Insulation Board, Thermal.

1.03 Submittals:
- A. Provide submittals in the form of samples, and documentation, to the Architect for review.

Part 2 - Products

2.01 Materials:
- A. Solvent Based Asphalt Water Barrier: FS-SS-A-701B.
- B. Flashing Membrane: 20 mil elastomeric modified sheet vinyl.
- C. Asphalt Plastic Cement: SS-C-153B, Type 1.
- D. Accessories: As recommended by manufacturer.
- E. Protection Board: Insulation Board, FS-LLL-1-535A, Class A.
- F. Vapor Barrier under floor slab: refer to Section 07195 - Vapor Retarder.

Part 3 - Execution

3.01 Installation - Wall Waterproofing:
- A. Location: Apply to all exterior concrete and masonry wall surfaces below grade.
- B. General:
  - 1. Repoint all holes cracks and joints and allow to dry before waterproofing.
  - 2. Do not apply until all surfaces are completely dry and clean. Apply only during favorable weather conditions.
- C. Joint Membrane:
  - 1. Location: Apply to all joints in exterior concrete walls below grade.
  - 2. Embed a strip of flashing membrane in plastic cement. Membrane shall be a minimum of 12" wide.
- D. Water Barrier:
  - 1. Hold 4" down from finish grade line so that at no time is the mastic or membrane exposed to view.
  - 2. Apply two (2) coats to form a membrane water barrier, allowing the first coat to dry before applying the second

coat. Apply in strict accordance with manufacturer's instructions. Do not apply until surfaces are completely dry.

3. Apply in a continuous unbroken film free from pin holes or other surface breaks. Take care to seal around all ties, inserts, anchor slots, conduit, pipes, electrical boxes, etc.

E. Protection:

1. Install protection board over all waterproofing prior to backfilling.
2. All back filling shall be carefully done to protect waterproofing. Repair all damaged areas.

3.02 Under Slab Vapor barrier:

A. Refer to Section 07260 – Vapor Barrier.

End of Section

DIVISION 7 - THERMAL & MOISTURE PROTECTION

SECTION 07150 - DAMPPROOFING

Part 1 - General

1.01 Work Included:
- A. All materials, labor, services and incidentals necessary for the completion of this section of the work.

1.02 Related Work Specified Elsewhere:
- A. Waterproofing - Section 07100
- B. Sealants - Section 07900

1.03 Quality Assurance
- A. Standards:
  - 1. Federal Specifications:
  - a. SS-C-153B, Cement, Bituminous, Plastic.
  - b. SS-A-701B, Asphalt, Weatherproofing.
  - 2. American Society for Testing and Materials:
    - a: ASTM D-250, Asphalt Saturated Asbestos Felts.

Part 2 - Products

2.01 Materials:
- A. Solvent Based Asphalt Water Barrier: FS-SS-A-701B
- B. Flashing Membrane: 20 mil elastomeric modified sheet vinyl.
- C. Asphalt Plastic Cement: SS-C-153B, Type 1.
- D. Asphalt Saturated Felt: ASTM D-250, Un-perforated,#15.
- E. Accessories: As recommended by manufacturer.

Part 3 - Execution

3.01 Installation - Cavity Wall Dampproofing:
- A. General - Masonry and Concrete:
  - 1. Repoint all holes, cracks and mortar joints and allow to dry before waterproofing and dampproofing.
  - 2. Sweep wall base, including concrete slab, clean of dirt and mortar droppings immediately prior to application of waterproofing and dampproofing cavity walls.
  - 3. Do not apply until all surfaces are completely dry and clean.
  - 4. Do not apply until all surfaces are completely dry and clean.
  - 5. Sight exposed mastic and membrane not allowed.
- B. Wall Base Waterproofing:
  - 1. Location: Apply at base of outer face of concrete walls and outer face of inner wythe at all exterior masonry cavity walls.
  - 2. At intersection of outer face of inner wythe with concrete slab, provide a 2" radius cove built up with asphalt plastic cement.

3. At wall base, embed a strip of plastic flashing in Plastic Cement. Lap all joints 8" minimum and seal with joint sealant. Seal completely around piping, conduit, etc. provide minimum joints using longest sheets of flashing practicable. Seal all punctures. Top edge of membrane shall be a minimum of 8" above concrete slab, worked into curve of plastic cement cover, down, and outward on concrete slab or steel shelf angle to outer wythe.

C. Cavity Wall Dampproofing:
1. Apply to outer face of inner wythe masonry cavity walls.
2. Apply two (2) coats to form a membrane water barrier, allowing the first coat to dry before applying the second coat. Apply in strict accordance with manufacturer's instructions. Do not apply until surfaces are completely dry.
3. Apply in a continuous unbroken film free from pin holes or other surface breaks. Take care to seal around all masonry ties, inserts, anchor slots, conduit, pipes, electrical boxes, etc.

End of Section

DIVISION 7 - THERMAL & MOISTURE PROTECTION

SECTION 07200 – INSULATION

Part 1 - General

1.01 Work Included:
- A. All materials, labor and services and incidentals necessary for the completion of this section of work.

1.02 Quality Assurance:
- A. Standards:
  - 1. Federal Specifications:
    - a. HH-I-524C, Type IV, Class C, Rigid Insulation.
    - b. ASTM C 665-84, Type 1, Insulation Blankets.
    - c. ASTM D1621, Compressive Strength.
    - d. ASTM E84, Flame Spread and Smoke Developed.
- B. Submittals:
  - 1. Provide submittals in the form of samples, and documentation, to the Architect for review.

1.03 Product Delivery, Storage and Handling:
- A. Rigid insulation board is combustible. During storage and insulation, observe good fire safety practice, including job site housekeeping.

1.04 **Products of certain manufacturers are specified herein to simplify descriptions of design, construction, and/or materials only. Proprietary names are not intended to imply that products of named manufacturer are required to the exclusion of equivalent products of other manufacturers.**

Part 2 - Products

2.01 Materials:
- A. Rigid Insulation: FS-HH-I-1972/1, Class 2 Rigid Insulation.
  - 1. Type: Glass fiber reinforced polyisocyanurate core with foil facing each side (glass fiber facing at roof insulation), and a compressive strength of 25 p.s.i. and a maximum water vapor transmission rate of >.03 perm-inch.
    - a. Application: 2 layers of rigid insulation. First layer shall be 2″ thick / second layer shall be 1.5″ thick for a total thickness of 3.5″ with a minimum total thermal resistance of R-20, for installation above metal roof decking and exterior wall at cavities. Refer to Drawings.
  - 2. Type: expanded polystyrene insulation.
    - a. Application: 2" thick with a thermal resistance of R-10.4, **for foundation wall perimeter below grade installation only.**
  - 3. Adhesive: as recommended by manufacturer of rigid

insulation board.

B. Fibrous Insulation: ASTM C 665-84, Type 1
   1. Type:
      a. 6" thick (approx.) mineral wool or fiberglass fire resistant insulating blanket or batt, with kraft paper facing. Thermal resistance R-19. Refer to Drawings for locations.

C. Vapor Retarder:
   1. Roof Deck Installation:
      a. Two layers of high strength kraft paper laminated with an adhesive, and reinforced at edges with fiberglass yarns.
      b. Type Example: Permstop - Owens Corning.

Part 3 - Execution

3.01 Installation - Rigid Insulation:

A. Install rigid insulation horizontally against back-up wall, or to roof deck, as shown on the Drawings.

B. **Rigid insulation and other components applied to metal decking at membrane roofing shall be fastened with approved fasteners at the rate of 1 per 2 square feet to meet FM I-90 requirements.**

C. Install 2 layers of rigid insulation to metal roof deck. Stagger joints of insulation to provide continuous insulation coverage.

D. Cut insulation by means of a saw, knife, or other sharp tool to fit around obstructions across the wall, such as vents, louvers, pipes and conduit.

E. If mastic adhesive is used to supplement holding the insulation in place, observe label directions.

End of Section

DIVISION 7 – THERMAL AND MOISTURE PROTECTION

SECTION 07260 – VAPOR BARRIER

PART 1 - GENERAL

1.01 Work Included

A. Furnish all labor, materials, services and equipment required in conjunction with or properly incidental to the installation of under-slab vapor barriers described herein and/or as shown on the drawings.

1.02 Related Work

A. Section 03300: Cast-In-Place Concrete.

1.03 Job Conditions

A. Subbase: Smooth and level, free from damaging protrusions that would puncture vapor barrier.

1.04 References

A. ASTM E 1643 - Standard Practice for Installation of Water Vapor Barriers Used in Contact with Earth or Granular Fill Under Concrete Slabs.

B. ASTM E 1745 - Standard Specification for Plastic Water Vapor Barriers Used in Contact with Soil or Granular Fill under Concrete Slabs: Exceeds Class B

C. ASTM E 96 - Standard Test Methods for Water Vapor Transmission of Materials.

D. ASTM E 154 – Standard Test Methods for Water Vapor Barriers Used in Contact with Earth Under Concrete Slabs, on Walls, or as Ground Cover

E. ASTM D 1709 - Standard Test Methods for Impact Resistance of Plastic Film by the Free-Falling Dart Method.

F. ASTM F 1249 – Standard Test Method for Water Vapor Transmission Rate Through Plastic Film and Sheeting Using a Modulated Infrared Sensor

G. ACI 302.1R – Vapor barrier component (plastic membrane) not less than 10 inches thick.

1.05 Submittals

A. Submit in accordance with Division 1 requirements.

B. Product Data: Provide manufacturers printed product literature and description, including tests and standards that have been performed on the vapor barrier material.

C. Samples: Submit two, 8 1/2 x 11 inch in size, illustrating the vapor barrier and two (2) 8-1/2-in long sample strips of the joint tape.

D. One each of all accessories that will be used in the installation.

E. Verification by Independent testing labs indicating that materials comply with specified requirements.

F. Certificates: Certify that products of this section meet or exceed specified requirements.

G. Manufacturer's Instructions: Indicate complete installation instructions.

PART 2 - PRODUCTS

2.01 Available Products
- A. Stego Wrap 15 mil Vapor Barrier by Stego Industries, L.L.C.
- B. Perminator™ 15 mil by W.R. Meadows .
- C. Vapor Block 15 (mil) by Raven Industries, Inc.
- D. Moistop Ultra 15 (mil) by Fortifiber Building Systems Group
- E. Viper Vaporcheck II 15 mil by Insulation Solutions, Inc.

2.02 Source Quality Control And Testing
- A. Vapor barrier membrane shall have following properties:
  1. Water Vapor Barrier: Meets or exceeds Class A according to ASTM E 1745.
  2. Water Vapor Transmission Rate: 0.012 grains/ft2/hour or lower according to ASTM E 96.
  3. Water Vapor Permeance: 0.01 perms or lower according to ASTM E 154 Sec. 7 or F 1249 (max.).
  4. Tensile Strength: 45.0 lbf/in according to ASTM E 154 Sec. 9. .
  5. Puncture Resistance: 2200 g according to ASTM D 1709, Method B

2.03 Accessories
- A. Tape:
  1. High Density Polyethylene Tape with pressure sensitive adhesive. Minimum width 4".
- B. Pipe Boot:
  1. Construct pipe boots from vapor barrier material and pressure sensitive tape per manufacturer's instructions.

PART 3 - EXECUTION

3.01 Examination
- A. Verify that conditions are acceptable for the placement of the vapor barrier.

3.02 Preparation
- A. Ensure that subsoil is approved by Geotechnical Engineer.
  1. Vapor Barrier shall be installed on top of the aggregate, sand or tamped earth base or carton forms. At carton forms provide a vertical leg down to grade and adhered the vapor barrier to the grade beam at or just below the dirt line. Vapor barrier may be placed either above or beneath any carton form slip sheet.

3.03 Installation

A. Install vapor barrier per manufacturer's instructions, illustrations and ASTM E 1643 Standard Practice for Installation of Water Vapor Barriers Used in Contact with Earth or Granular Fill Under Concrete Slabs.

1. Level and tamp or roll granular base.
2. Place Vapor Barrier with the longest dimension parallel with the direction of the pour.
3. Lap Vapor Barrier over footings and seal to foundation walls. Seal all penetrations.
4. Lap joints 6 inches and seal with the recommended pressure sensitive tape.
5. Seal pipe penetrations with pipe boot made from vapor barrier and tape.
6. Protect vapor barrier from damage during installation of reinforcing steel and utilities.
7. Repair damaged areas by cutting patches of vapor barrier, overlapping damaged area 6 inches and taping all four sides with pressure sensitive tape.

3.04 Interface With Other Work

A. Coordinate work of all other trades related to the slab base and utility services.

END OF SECTION

DIVISION 7 - THERMAL & MOISTURE PROTECTION

SECTION 07415 – PREFINISHED METAL SOFFIT PANELS

Part 1 - General

1.01 Work Included:
- A. The General Conditions and applicable sections of Division 1 shall apply to this entire section.
- B. All materials, labor, services and incidentals necessary for the completion of this section of the work.

1.02 Related Work Specified Elsewhere:
- A. Metal Fabrications - Section 05500
- B. Flashing and Sheet metal - Section 07600

1.03 Quality Assurance:
- A. Qualifications of Installer: Competent and skilled sheet metal applicator familiar with this type installation with successful completion of projects of familiar scope. Applicator shall have at least two years of experience in prefinished sheet metal applications.

1.04 Shop Drawings:
- 1.1 Submit complete shop drawings on all prefinished metal applications, showing layouts of seams, joints, details, and installation methods. Show details of weatherproofing at edges, terminations and penetrations in metal work.

1.05 Applicator and Guarantee:
- C. All work shall be done by one contractor with 5 years minimum experience in this type of metal work.
- B. Provide ten (10) years guarantee written on contractor's letterhead for work of this Section.

1.06 Warranty:
- A. Provide a 20-year manufacturer's warranty covering color fade, chalk, and film integrity at no charge.

1.07 **Products of certain manufacturers are specified herein to simplify descriptions of design, construction, and/or materials only. Proprietary names are not intended to imply that products of named manufacturer are required to the exclusion of equivalent products of other manufacturers.**

Part 2 - Products

2.01 Acceptable Manufacturers:
- A. Quality of Manufacturers: The products, colors and finishes herein are of AEP-Span products to establish standards of quality and appearance. The products of other manufacturers are acceptable subject to meeting or exceeding the requirements of these specifications, and the approval of the Architect.

2.02 Materials -
- A. Prefinished Metal Soffits:
  - 1. Flush Panel, (FP 12-2) 24 gauge steel with embossed finish.

2. Color: to be selected by Architect from Manufacturer's standard colors.
3. Flashings, Closures, and Trim shall be fabricated from same material, gauge, and finish as panels.
4. Finish: Kynar 500.

Part 3 - Execution

3.01 Installation:

A. Fabricate and install prefinished metal facings in accordance with drawings and recognized sheet metal practices using conventional hand or power tools. Keep cut edges sharp, clean, properly dressed and closely aligned. Exercise care during fabrication and erection to avoid damage.

B. Structural framing members and fasteners shall be sized and located as recommended by the panel manufacturer. The applicator shall insure that the correct fastener has been chosen for size and length necessary for loading requirements. Special care shall be exercised installing fasteners so as not to overdrive or misdirect fasteners which could cause damage to panels or trim. Use colored pop rivets on trim items and where exposed fasteners are necessary. Keep exposed fasteners to very minimum.

C. Only minor scratches and abrasions will be allowed to be touched up. Any other damaged material shall be replaced.

End of Section

DIVISION 7 – THERMAL & MOISTURE PROTECTION

SECTION 07424 – COMPOSITE WALL PANELS

PART 1 General

1.1 Work Included:

A. Aluminum-faced composite panels, attachments, and sealants.

1.2 Related Sections:

A. Section 05100 – Structural Metal Framing.

B. Section 06100 – Rough Carpentry.

C. Section 07200 – Insulation

D. Section 07600 – Flashing and Sheet Metal.

E. Section 07900 – Sealants.

F. Section 09250 – Gypsum Wallboard.

1.3 References:

A. American Society for Testing and Materials (ASTM) B209 - Aluminum and Aluminum-Alloy Sheet and Plate.

B. American Society for Testing and Materials (ASTM) C481 - Laboratory Aging of Sandwich Constructions.

C. American Society for Testing and Materials (ASTM) E72 - Standard Test Methods of Conducting Strength Tests of Panels for Building Construction.

D. American Society for Testing and Materials (ASTM) E84 - Surface Burning Characteristics of Building Materials.

E. American Society for Testing and Materials (ASTM) E283 - Rate of Air Leakage through Exterior Windows, Curtain Walls, and Doors.

F. American Society for Testing and Materials (ASTM) E289 - Linear Thermal Expansion of Rigid Solids with Interferometry.

G. American Society for Testing and Materials (ASTM) E330 - Structural Performance of Exterior Windows, Curtain Walls, and Doors.

H. American Society for Testing and Materials (ASTM)

E331 - Water Penetration for Exterior Windows, Curtain Walls, and Doors.

I. American Society for Testing and Materials (ASTM) D1781 - Climbing Drum Peel for Adhesives.

J. American Society for Testing and Materials (ASTM) - Structural Performance of Exterior Windows, Curtain Walls, and Doors by Uniform Static Air Pressure Difference.

K. American Architectural Manufacturers Association (AAMA) 501 – Water Penetration using Dynamic Pressure.

L. American Architectural Manufacturers Association (AAMA) 605.2 - Voluntary Specification for High Performance Organic Coatings on Architectural Extrusions and Panels.

M. American Architectural Manufacturers Association (AAMA) TIR-a11 - Maximum Allowable Deflection of Framing Systems for Building Cladding Components at Design Wind Loads.

1.4 System Description:

A. Design Requirements:
   1. Design system to accommodate movement of components without buckling, failure of joint seals, undue stress on fasteners, or other detrimental effects when subjected to temperature and humidity ranges reasonably anticipated.
   2. Design system to accommodate tolerances of structure.

B. Performance Requirements:
   1. Submit test data witnessed by an independent testing agency for the following requirements:
      a. Structural tests for wind loads by "Chamber Method" in compliance with ASTM E72.
         1) Standard test design loading: 20 psf (960 Pa) positive and negative wind load.
         2) Design panel system to withstand code imposed design loads and a deflection limit of L/180 shall apply to positive

load pressures only.

3) Design panel system to withstand code imposed design loads and a deflection limit of L/175 shall apply to positive load pressures only.

b. Air Infiltration: 0.06 cfm per square foot (32 lps per square meter) air leakage under a static pressure of 1.56 psf (7.65 kg per square meter) when tested in accordance with ASTM E283.

c. Water Penetration: No uncontrolled water penetration through the standard vertical panel and sealed joints at a static pressure of 6.24 psf (30.5 kg per square meter) when tested in accordance with ASTM E331.

1.5 Submittals:

A. Submit as directed below and as per the Special Conditions.

B. Manufacturer's data sheets on each product to be used, including:
   1. Preparation instructions and recommendations.
   2. Storage and handling requirements and recommendations.
   3. Installation methods.

C. Shop Drawings: Submit shop drawings showing layout, flashings, drainage, ventilation, vapor barriers, vapor retarders, profiles and product components, including anchorage, accessories, finish colors, patterns, and textures.

D. Selection Samples: For each finish product specified, two complete sets of color chips representing manufacturer's full range of available colors and patterns.

E. Verification Samples: For each finish product specified, two samples, minimum size 3 inches (76 mm) by 5 inches (128 mm) representing actual product, color, and patterns.

F. Quality Assurance Submittals: Submit the following:
   1. Test reports: Certified test reports showing

compliance with specified performance characteristics and physical properties.

2. Certificates: Product certificates signed by manufacturer certifying materials comply with specified performance characteristics and criteria, and physical requirements.

1.6 Quality Assurance:

A. Manufacturer Qualifications: Manufacturer capable of providing field service representation during construction, approving acceptable installer and approving application method.

B. Installer Qualifications:
   1. Installer experienced in performing work of this section who has specialized in installation of work similar to that required for this project.
   2. Panel Installer shall assume responsibility for all components of the exterior panel system including, but not limited to attachment to sub-construction, panel to panel joinery, panel to dissimilar material joinery, and joint seal associated with the panel system.

C. Pre-installation Meetings: Conduct pre-installation meeting to verify project requirements, substrate conditions, manufacturer's installation instructions, and manufacturer's warranty requirements.

1.7 Delivery, Storage, and Handling:

A. Store panels horizontally, off-the-ground, in manufacturer's unopened packaging until ready for installation.

B. Examine delivered materials upon receipt to ensure that no damage has occurred during shipment. Store metal-faced composite wall panels horizontally, covered with a suitable weather tight and ventilated covering. Store metal-faced composite wall panels to ensure dryness, with a positive slope for drainage of water. Do not store metal-faced composite wall panels in contact with other materials that might cause staining, denting, or other surface damage. DO NOT allow storage space

to exceed 120 degrees F (49 degrees C).

C. Store and dispose of solvent-based materials, and materials used with solvent-based materials, in accordance with requirements of local authorities having jurisdiction.

1.8 Project Conditions:

A. Maintain environmental conditions (temperature, humidity, and ventilation) within limits recommended by manufacturer for optimum results. Do not install products under environmental conditions outside manufacturer's absolute limits.

1.9 Warranty:

A. Finish Warranty: Commencing on Date of Substantial Completion.
   1. Provide 20-year written warranty with PVDF/KYNAR 500 finish color coated metal finish covering color fading, chalking, and film integrity.
   2. Finish coating shall not peel, blister, chip, crack or check.
   3. Chalking, fading or erosion of finish measured by the following tests:
      a. Finish coating shall not chalk in excess of 8 numerical ratings when measured in accordance with ASTM D659.
      b. Finish coating shall not change color or fade in excess of 8 NBS units as determined by ASTM D2244.

B. Material and Installation Warranty: Commencing on Date of Substantial Completion.
   1. When installed as directed by Laminators Incorporated, panels covered by this warranty are warranted not to delaminate (separate) at any Laminators produced glue line for a period of five years.

PART 2 PRODUCTS

2.1 Manufacturers:

A. Acceptable Manufacturer: Laminators Incorporated; 3255 Penn St., Hatfield, PA 19440. ASD. Tel:

(215)723-8107. Toll Free: (877) OMEGA77. Fax: (215) 721-1239. Web: http://www.laminatorsinc.com

B. Substitutions: as approved by Architect.

C. Requests for substitutions will be considered in accordance with provisions of the Project Manual.

2.2 Omega-Lite Aluminum-Faced Composite Panels:

A. Omega-Lite Composite Panels as manufactured by Laminators Incorporated.
   1. Panel Construction: Finished aluminum sheet over a corrugated polyallomer (CPA) core with backer sheet.
   2. Panel Facing:
      a. Smooth face, minimum 0.021 inch (0.53 mm) thick, ASTM B209 aluminum sheet
   3. Panel Backing:
      a. Random painted aluminum sheet, minimum 0.013 inch (0.33 mm) thick, ASTM B209 aluminum sheet
   4. Panel Thickness: 6 mm (1/4 inch)
   5. Fire Test Performance: ASTM E84: Class A.
   6. Bond Test Performance: ASTM C481-A Cyclic Aging: Pass.
   7. Finish:
      a. PVDF/Kynar 500 – 20-year warranty paint system meeting AAMA 2605
   8. Finish Colors: Refer Room Finish Schedule included in the Drawings.

B. Aluminum Composite Panel Installation System:
   1. Installation:
      a. 1-Piece Tight-Fit Extrusion (6 mm only)
      b. Reveal "H"-Molding 4595X
      c. Provide corner, drip edge, etc. trim as required for complete and watertight installation.

2.3 Accessories:

A. Manufacturer's Sealants and Accessories: Provide manufacturer's recommended sealants and accessories for product installation.

B. Flashing: Fabricate flashing materials from 0.030 inch (0.76 mm) minimum thickness aluminum sheet

painted to match the adjacent curtain wall/panel system where exposed. Provide a 12 inch (305 mm) wide lap strap under the flashing at abutted conditions and seal lapped surfaces with a full bed of non-hardening sealant.

2.4 Fabrication:

A. Panels shall be fabricated and finished as required to provide material construction and performance as specified and as required by manufacturer to comply with warranty provisions.
   1. Tolerances: Length and Width: plus or minus 1/16 inch (1.6mm). Squareness (Diagonals): equal within 1/8 inch (3.2mm).

PART 3 EXECUTION

3.1 Examination:

A. Do not begin installation until substrates have been properly prepared.

B. Examine substrates, areas, and conditions, with substrate installer present, for compliance with requirements for structural soundness, installation tolerances, metal panel supports, and other conditions affecting performance of work.
   1. Examine primary and secondary wall framing to verify that girts, angles, channels, studs, and other structural panel support members and anchorage have been installed within alignment tolerances listed below.
      a. 1/4 inch (6 mm) in any 20 feet (6 m) length vertically or horizontally.
      b. 1/2 inch (12 mm) in any building elevation.
   2. Examine solid wall sheathing to verify that sheathing joints are supported by framing or blocking and that installation is within flatness tolerances required.
   3. For the record, prepare written report, endorsed by panel installer and substrate installer, listing remedy for conditions detrimental to performance of work.

C. Examine roughing-in for components and systems penetrating metal panels to verify actual locations of penetrations relative to seam locations of metal

panels before metal panel installation.

D. Proceed with installation only after all unsatisfactory conditions have been corrected.

E. If substrate preparation is the responsibility of another installer, notify Architect of unsatisfactory preparation before proceeding.

3.2 Installation:

A. Comply with manufacturer's installation guides and Product Data, including product technical bulletins, product catalog installation instructions, and product carton instructions for installation type selected.

B. Work shall be done and completed in a thorough and workmanlike manner by mechanics skilled in their various trades.

C. Caulk Installation:
1. Use only approved sealants as described in Laminators Incorporated Installation Guidelines.
2. The sealant manufacturer’s instructions shall be followed in preparing and installing sealants.
3. Joints to receive sealant shall be clean, dry and free from dust, grit and contaminants.
4. The sealant shall completely fill the glazing pockets.

3.3 Field Quality Control:

A. Manufacturer's Field Services: Upon Owner's request, provide manufacturer's field service consisting of product use recommendations and periodic site visit for inspection of product installation in accordance with manufacturer's instructions.

3.4 Cleaning and Protection:

A. Protection: Protect installed product and finish surfaces from damage during construction.

B. Cleaning: Remove temporary coverings and protection of adjacent work areas. Repair or

replace damaged installed products. Clean installed products in accordance with manufacturer's instructions prior to owner's acceptance. Remove construction debris from project site and legally dispose of debris.

C. Protect installed products until completion of project.

D. Touch-up, repair or replace damaged products before Substantial Completion.

End of Section

DIVISION 7 – THERMAL AND MOISTURE PROTECTION

SECTION 07550 – MODIFIED BITUMEN MEMBRANE ROOFING SYSTEM

Part 1 - General

1.01 Section Includes:
- A. Preparation of Substrate to Receive Roofing Materials
- B. Roof Insulation Application to Prepared Substrate
- C. Roof Membrane Application
- D. Roof Flashing Application
- E. Incorporation of Sheet Metal Flashing Components and Roofing Accessories into the Roof System

1.02 Products Installed But Not Furnished Under This Section:
- A. Sheet Metal Flashing and Trim
- B. Sheet Metal Roofing Specialties

1.03 Related Sections:
- A. Roof Decks - Section 05310
- B. Rough Carpentry - Section 06100
- C. Insulation - Section 07200
- D. Flashing & Sheet Metal Section 07600

1.04 Reference Standards:

References in these specifications to standards, test methods and codes, are implied to mean the latest edition of each such standard adopted. The following is an abbreviated list of associations, institutions, and societies which may be used as references throughout these specifications.

ASTM	American Society for Testing and Materials Philadelphia, PA
FM	Factory Mutual Engineering and Research Norwood, MA
NRCA	National Roofing Contractors Association Rosemont, IL
OSHA	Occupational Safety and Health Administration Washington, DC
SMACNA	Sheet Metal and Air Conditioning Contractors National Association, Chantilly, VA
UL	Underwriters Laboratories, Northbrook, IL

1.05 Description Of Work:
- A. **Project Type:** New installation.
  Deck: Metal Slope: **3/8 inch ±** per foot.
- B. **Rigid Insulation:**
  1. Top and Bottom Layers: Polyisocyanurate, having a total thickness of **3.5"** – top layer of 1 1/2" and bottom layer of 2”. Refer to Section 07200, Insulation.
  2. Crickets: Polyisocyanurate (tapered) providing a roof slope to roof drains (refer to Drawings.)
- C. **Gypsum sheathing panel:** having a thickness of 1/2 inch, mechanically attached, as per FM I-90 requirements.
- D. **Roof System:** Modified Bitumen Base, applied in cold

adhesive; stripping and Flashing, applied in cold adhesive. Modified Bitumen Finish Ply, applied in cold adhesive.

E. **Flashing System:** SBS with continuous metal-foil surfacing, torch applied.

1.06 Submittals:

A. Submittals Prior to Contract Award:

1. Letter from the proposed primary roofing manufacturer confirming that the bidder is an acceptable Contractor authorized to install the proposed system.
2. Letter from the primary roofing manufacturer stating that the proposed application will comply with the manufacturer's requirements in order to qualify the project for the specified guarantee.

B. Submittals Prior to Project Close-out:

1. Manufacturer's printed recommendations for proper maintenance of the specified roof system including inspection frequencies, penetration addition policies, temporary repairs, and leak call procedures.

1.07 Quality Assurance:

A. Acceptable Products: Primary roofing products, including each type of sheet, all manufactured in the United States, shall be supplied by a single manufacturer which has been successfully producing the specified types of primary products for not less than 10 years. The primary roofing products shall have maintained a consistent composition for a minimum of five years.

B. Agency Approvals: The proposed roof system shall conform to the following requirements. No other testing agency approvals will be accepted.

1. Underwriters Laboratories Class A acceptance of the proposed roofing system without additional requirements for coatings.

C. Acceptable Contractor: Contractor shall have a minimum of 10 years of experience in successfully installing the same or similar roofing materials and be certified in writing by the roofing materials manufacturer to install the primary roofing products for a minimum of 5 years prior to the date of bid opening.

1. Torch Applicators: Contractor shall employ torch applicators who have successfully passed the CERTA (Certified Roofing Torch Applicator) program requirements as provided by the National Roofing Contractors Association (NRCA).
2. The Contractor shall have an office, warehouse with supplies, and permanent roofing crews within a 50 mile radius of Moore, Oklahoma. Contractor shall have had “NDL” (No Dollar Limit) approval for 5 years AT THIS

AREA OFFICE from manufacturer and shall perform a minimum of ten (10) NDL manufacturer guarantees per year.

3. **Owner's Roofing Contractor (Universal Roofing and Sheet Metal located in Moore, Oklahoma) shall be utilized on this project. The bid shall be based on the provided drawings and specifications, and agreed-to pricing.**

D. Scope of Work: The work to be performed under this specification shall include but is not limited to the following: Attend necessary job meetings and furnish competent and full-time supervision, experienced roof mechanics, all materials, tools, and equipment necessary to complete, in an acceptable manner, the roof installation in accordance with this specification. Comply with the latest written application instructions of the manufacturer of the primary roofing products. In addition, application practice shall comply with requirements and recommendations contained in the latest edition of the Handbook of Accepted Roofing Knowledge (HARK) as published by the National Roofing Contractors Association, amended to include the acceptance of a phased roof system installation.

E. Local Regulations: Conform to regulations of public agencies, including any specific requirements of the city and/or state of jurisdiction.

F. Manufacturer Requirements: Ensure that the primary roofing materials manufacturer provides direct trained company personnel to attend necessary job meetings, perform periodic inspections as necessary, and conducts a final inspection upon successful completion of the project.

G. Contractor shall have one of the following approved Contractor Certification levels prior to bid opening:

Johns Manville - Peak Advantage Contractor
Soprema – Soprema Certified Applicator
Siplast – Siplast Select Applicator
GAF - Master Select Contractor

1.08 Product Delivery Storage And Handling:

A. Delivery: Deliver materials in the manufacturer's original sealed and labeled containers and in quantities required to allow continuity of application.

B. Storage: Store materials out of direct exposure to the elements. Store roll goods on a clean, flat and dry surface. All material stored on the roof overnight shall be stored on pallets. Rolls of roofing must be stored on ends. Store materials on the roof in a manner so as to preclude overloading of deck and building structure. Store materials such as solvents, adhesives, and asphalt cutback

products away from open flames, sparks, or excessive heat. Cover all material using a breathable cover such as a canvas. Polyethylene or other non-breathable plastic coverings are not acceptable.

C. Handling: Handle all materials in such a manner as to preclude damage and contamination with moisture or foreign matter. Handle rolled goods to prevent damage to edges or ends.

D. Damaged Material: Any materials that are found to be damaged or stored in any manner other than stated above will be automatically rejected, removed, and replaced at the Contractor's expense.

1.09 Project/Site Conditions:

A. Requirements Prior to Job Start

1. Notification: Give a minimum of 5 days notice to the Owner and manufacturer prior to commencing any work and notify both parties on a daily basis of any change in work schedule.
2. Permits: Obtain all permits required by local agencies and pay all fees which may be required for the performance of the work.
3. Safety: Familiarize every member of the application crew with all fire and safety regulations recommended by OSHA, NRCA and other industry or local governmental groups.

B. Environmental Requirements:

1. Precipitation: Do not apply roofing materials during precipitation or in the event there is a probability of precipitation during application.
   Take adequate precautions to ensure that materials, applied roofing, and building interiors are protected from possible moisture damage or contamination.
2. Temperature Restrictions: At ambient temperatures between 40F and 50F, prepare / warm adhesive as directed by manufacturer.

C. Protection Requirements:

1. Membrane Protection: Provide protection against staining and mechanical damage for newly applied roofing and adjacent surfaces throughout this project.
2. Torch Safety: Designate one person on each crew to perform a daily fire watch. The designated crew member shall watch for fires or smoldering materials on all areas of roof construction. Continue the fire watch after roofing material application has been suspended for the day.
3. Limited Access: Prevent access by the public to materials, tools, and equipment during the course of

the project.

4. Debris Removal: Remove all debris daily from the project site and take to a legal dumping area authorized to receive such materials.
5. Site Condition: Complete, to the owner's satisfaction, all job site clean-up including building interior, exterior and landscaping where affected by the construction.

1.10 Guarantee/Warranty:

A. Roof Membrane Guarantee: Upon successful completion of the project, and after all post installation procedures have been completed, furnish the Owner with **the manufacturer's ten year labor and materials membrane guarantee.** The guarantee shall be a term type, without deductibles or limitations on coverage amount, and shall be issued at no additional cost to the Owner. This guarantee shall not exclude random areas of ponding from coverage.

1.11 **Products of certain manufacturers are specified herein to simplify descriptions of design, construction, and/or materials only. Only the four systems listed in 2.02 Description of Systems below will be accepted for installation on this project.**

Part 2 - Products:

2.01 Roofing System Assembly/Products:

A. Rigid Roof Insulation: Roof insulation shall be UL and FM approved. Insulation shall be approved in writing by the insulation manufacturer for intended use and for use with the specified roof assembly. Refer to Section 07200.
B. Recover Board Sheathing Panel for Roof Membrane Substrate: A panel composed of high density fiberboard, non-structural water resistant core material integrally bonded having a nominal thickness of 1/2 inch.
   1. Acceptable Manufacturer: Fiberboard Coated High Density Roof Insulation, by Huebert.
C. Gypsum Sheathing Panel for Wood/Plywood Surfaces to Receive Flashing Coverage: A panel composed of a gypsum based, non-structural water resistant core material integrally bonded with fiberglass mats on both sides having a nominal thickness of 1/2 inch. The panel surface shall be factory primed with a non-asphaltic primer.
   1. Acceptable Manufacturer: DensDeck Prime Gypsum Roof Board, by Georgia Pacific Corporation; Atlanta, GA

2.02 Description Of Systems:

A. Roofing Membrane Assembly: A roof membrane assembly consisting of two plies of a prefabricated, reinforced, homogeneous Styrene-Butadiene-Styrene (SBS) block copolymer

modified asphalt membrane, applied over a prepared substrate. Both reinforcement mats shall be impregnated/saturated and coated each side with an SBS modified bitumen blend. The roof system shall pass 500 cycles of ASTM D 5849 Resistance to Cyclic Joint Displacement (fatigue) at 14F - or show evidence of other independent testing indicating resistance fatigue, membrane cracking and delamination. Passing results shall show no signs of membrane cracking or interply delamination after 500 cycles. The roof system shall pass 200 cycles of ASTM D 5849 after heat conditioning performed in accordance with ASTM D 5147. The assembly shall possess waterproofing capability, such that a phased roof application, with only the modified bitumen base ply in place, can be achieved for prolonged periods of time without detriment to the watertight integrity of the entire roof system.

1. Acceptable Manufacturer: Johns Manville roof system:
   a. Modified Bitumen Base, Stripping, and Flashing Reinforcing Ply.
      JM DynaBase
   b. Modified Bitumen Finish Ply
      JM DynaGlas FR
   c. Stripping Ply and Flashing Reinforcing Sheet
      JM DynaPly

B. Flashing Membrane Assembly: A flashing membrane assembly consisting of a prefabricated, reinforced, Styrene-Butadiene-Styrene (SBS) block copolymer modified asphalt membrane with a continuous, channel-embossed metal-foil surfacing. The finish ply shall conform to ASTM D 6298 and the following physical and mechanical property requirements.

1. Acceptable Manufacturer: Johns Manville flashing system, aluminum finish
   a. Cant Backing Sheet for Wood/Plywood Surfaces to Receive Flashing Coverage: applicable JM product.
   b. Metal-Clad Modified Bitumen Flashing Sheet: JM DynaClad Flashing
   c. Cant Strip: JM FesCant Plus Cant Strips

C. Catalyzed Acrylic Resin Flashing System: A specialty flashing system consisting of a liquid-applied, fully reinforced, multi-component acrylic membrane installed over a prepared or primed substrate. The flashing system consists of a catalyzed acrylic resin primer, basecoat and topcoat, combined with a non-woven polyester fleece. The resin and catalyst are pre-mixed immediately prior to installation. The use of the specialty flashing system shall be specifically approved in advance by the membrane

manufacturer for each application.

1. Acceptable Manufacturer: Flashing System by Johns Manville; Denver, CO

D. Additional Roof Systems: The following additional roof systems are acceptable for use in lieu of the specified roof system.

1. GAF Materials Corp., Wayne, NJ
   Base Ply – Ruberoid Mop Smooth
   Finish Ply – Ruberoid Mop FR - cap ply Plus
   Flashing Sheet – Ruberoid Ultraclad SBS
   Stripping Ply and Flashing Reinforcing Sheet - Ruberoid Mop Smooth
2. Soprema, Inc., Wadsworth, OH
   Base Ply – Elastophene Sanded 2.2
   Finish Ply – Elastophene LS FR GR
   Flashing Sheet – Sopralast 50 TV ALU
   Stripping Ply and Flashing Reinforcing Sheet - Elastophene Sanded 2.2

2.03 Roofing Accessories:

A. Roofing Adhesives:

1. Membrane Cold Adhesive: An asphalt, solvent blend conforming to ASTM D 3019, Type III requirements.
   a. Acceptable Manufacturer: MBR Cold Application Adhesive by Johns Manville; Denver, CO

B. Bituminous Cutback Materials:

1. Primer: An asphalt, solvent blend conforming to ASTM D 41 requirements.
2. Mastics: An asphalt cutback mastic, reinforced with non-asbestos fibers, used as a base for setting metal flanges conforming to ASTM D 4586 Type II requirements.

C. Sealant: A moisture-curing, non-slump elastomeric sealant designed for roofing applications. The sealant shall be approved by the roof membrane manufacturer for use in conjunction with the roof membrane materials.

D. Ceramic Granules: No. 11 grade specification ceramic granules of color scheme matching the granule surfacing of the finish ply.

E. Metallic Powder: A finely graded metal dust as supplied or approved by the membrane manufacturer, used for covering of bitumen overruns over the foil surfaced membrane.

F. Perlite Cant Strips: A cant strip composed of expanded volcanic minerals combined with waterproofing binders. The top surface shall be pre-treated with an asphalt based coating. The face of the cant shall have a nominal 4 inch dimension.

G. Fasteners:
   1. Gypsum Sheathing Panel Fasteners for Roofing Substrates and Wood/Plywood Flashing Surfaces: Gypsum sheathing panel fasteners and plates shall be FM Approved, and/or approved by the manufacturer of the primary roofing products. The fastening pattern for each panel to be used shall be as recommended by the panel manufacturer and approved by the manufacturer of the primary roofing products. Acceptable panel fastener manufacturers for specific substrate types are listed below.
      a. Wood/Plywood Flashing Surfaces: Gypsum sheathing panel mechanical fasteners shall be factory coated for corrosion resistance. The fastener shall conform meet or exceed Factory Mutual Standard 4470 and when subjected to 30 Kesternich cycles, show less than 15% red rust. Acceptable fastener types for wood/plywood substrates are listed below.
         1) A fluorocarbon coated screw type roofing fastener having a minimum 0.220 inch thread diameter. Plates used in conjunction with the fastener shall be a metal type having a minimum 3 inch diameter, as supplied by the fastener manufacturer.
      b. Acceptable Manufacturer's:
         1) Ultrafast Fastener with UltraFast Round Metal Plates by Johns Manville; Denver, CO
         2) Dekfast #12 with Dekfast Steel Hexagonal Plates by Construction Fasteners, Inc.; Wyomissing, PA
         3) Standard Roofing Fastener by Olympic Manufacturing Group, Agawam; MA
   2. Flashing Reinforcing Sheet Fasteners: Fasteners shall be approved by the manufacturer of the primary roofing products. Acceptable fasteners for specific substrate types are listed below.
      a. Wood/Plywood Substrates
         1) A 12 gauge, spiral or annular threaded shank, zinc coated steel roofing fastener having a minimum 1 inch head.
         2) Square Cap by W.H. Maze Co.; Peru, IL
            12 Gauge Simplex Nail by the Simplex Nail and Manufacturing Co., Americus, GA
         3) Fasteners shall be applied to meet FM-I90 requirements. At crickets, if insulation thickness prohibits satisfactory application

of fasteners, use adhesive similar to Para-STIK insulation adhesive.

H. Walktread: A prefabricated, puncture resistant polyester core reinforced, polymer modified bitumen sheet material topped with a ceramic-coated granule wearing surface.
   1. Thickness: 0.25 in
   2. Width: 32 in
   3. Acceptable Manufacturer: DynaTred Roof Walkway Pads by Johns Manville; Denver, CO

I. Pipe Supports Typical:
   1. Roller System: A “roller-bearing” pipe support for roof-mounted gas pipes, RTU condensate lines, and electrical conduit up to 4" I.D. or 5"O.D. Pipes rest on a self-lubricating roller system which is made of a stainless steel or glass-filled nylon rod and a sturdy polycarbonate resin roller. Pipe support base shall be manufactured of polycarbonate resin with a roller rod of glass-filled nylon, and stainless steel metal parts.
   2. Load Weight: Maximum load weight may not exceed 125 lbs. per pipestand.
   3. Spacing: Not to exceed 10 foot centers. Do not exceed 125 lbs. load weight and adjust pipe stand in height to even load.
   4. Acceptable Manufacturer: Pillow Block Pipestand Model 4-R, Miro Industries, Inc., 1780 West 2300 South, Salt Lake City, Utah 84119.

J. Pipe Supports at Turns In Large Piping:
   1. Pipe Support Hangers: A “clevis hanger” pipe support hanger for roof mounted gas pipes at all large (over 4" I.D.) piping corners, bends, and “tees”/pipe intersections. Pipes rest on a clevis hanger with a support base of stainless steel polycarbonate. All other metal parts are hot-dip galvanized steel.
   2. Load Weight: Maximum load weight not to exceed 310 lbs. per pipestand or 155 lbs. on each base.
   3. Spacing: Locate “clevis” type pipe hangers at all corners, bends, and “tees”/pipe intersections not to exceed 10'-0" o.c. maximum. Do not exceed 310 lbs. load weight (155 lbs. on each base) and make certain each pipestand is adjusted in height to even load at all pipestands.
   4. Acceptable Manufacturer: Pillow Block Pipestand Model 6-H, Miro Industries, Inc., 1780 West 2300 South, Salt Lake City, Utah 84119.

K. Penetration Dam/Sealer Pockets shall be similar to: **ChemCurb System:** gray polyester resin exterior forms,

structural sealant and One (1) part self-leveling moisture cure pourable sealer (gray).

Part 3- Execution

3.01 Preparation:

A. General: Sweep or vacuum all surfaces, removing all loose aggregate and foreign substances prior to commencement of roofing.

3.02 Substrate Preparation - Metal Deck / Insulation:

A. Preparation of Wood/Plywood Substrates to Receive Flashing Materials: Mechanically attach the gypsum sheathing panels to all wood/plywood substrates that will be covered with the specified flashing membrane, using the specified screws/plates, at 12 inches o.c. staggered. Cut the cant backing sheet into 12 inch widths and peel the release film from the back of the sheet. Set the sheet into place extending 6 inches onto the field of the roof area and 6 inches up the gypsum sheathing panel surface utilizing minimum 3 inch side laps. Set the cant into place prior to installation of the roof membrane base ply.

B. Insulation Panel - two layers: Mechanically attach the insulation panels, using the specified fasteners, at a rate of 1 fastener for every 2.7 square feet of panel area (12 per 4' x 8' panel). Increase the fastening frequency by 50% at the perimeter of the roof area and by 75% at the corners. Meet FM I-90 requirements.

C. Gypsum Sheathing Panels: Install sheathing panels, and any tapered insulation in hot asphalt, with end joints offset; edges of the panels shall be in moderate contact without forcing applied in strict accordance with the insulation manufacturer's requirements and the following instructions.

3.04 Roof Membrane Installation:

A. Membrane Application: Apply roofing in accordance with roofing system manufacturer's instructions and the following requirements. Application of roofing membrane components shall immediately follow application of base sheet and/or insulation as a continuous operation.

B. Aesthetic Considerations: An aesthetically pleasing overall appearance of the finished roof application is a standard requirement for this project. Make necessary preparations, utilize recommended application techniques, apply the specified materials including granules and metallic powder, and exercise care in ensuring that the finished application is acceptable to the Owner.

C. Priming: Prime metal and concrete and masonry surfaces with a uniform coating of the specified primer.

D. Membrane Adhesive Application: Membrane adhesive can be applied by roller, squeegee or spray unit. Apply cold adhesive in a smooth, even, continuous layer without breaks or voids. Utilize an application rate of 2 to 2 1/2 gal/sq over irregular or porous substrates. Utilize an application rate of 1 1/2 to 2 gal/sq for interply applications. Double the adhesive application rate at the end laps of granule surfaced sheets. In the areas surrounding details that are to receive the catalyzed acrylic resin primer and flashing system, apply membrane plies in a full coating of the specified elastomeric sealant in lieu of the solvent based adhesive a minimum 8 inches from the base of the penetration or curb.

E. Bitumen Consistency: Cutting or alterations of bitumen, primer, and sealants will not be permitted.

F. Roofing Application: Apply all layers of roofing free of wrinkles, creases, or fishmouths. Exert sufficient pressure on the roll during application to ensure prevention of air pockets.

1. Apply all layers of roofing perpendicular to the slope of the deck.
2. Fully bond the base ply to the prepared substrate, utilizing minimum 3 inch side and end laps. Apply each sheet directly behind the asphalt applicator. Cut a dog ear angle at the end laps on overlapping selvage edges. Using a clean trowel, apply top pressure to top seal T-laps immediately following sheet application. Stagger end laps a minimum of 3 feet.
3. Fully bond the finish ply to the base ply, utilizing minimum 3 inch side and end laps. Apply each sheet directly behind the cold adhesive applicator. Stagger end laps of the finish ply a minimum 3 feet. Cut a dog ear angle at the end laps on overlapping selvage edges. Using a clean trowel, apply top pressure to top seal T-laps immediately following sheet application. Stagger side laps of the finish ply a minimum 12 inches from side laps in the underlying base ply. Stagger end laps of the finish ply a minimum 3 feet from end laps in the underlying base ply.
4. Maximum sheet lengths and special fastening of the specified roof membrane system may be required at various slope increments where the roof deck slope exceeds 1/2 inch per foot. The manufacturer shall provide acceptable sheet lengths and the required fastening schedule for all roofing sheet applications

to applicable roof slopes.

G. Granule Embedment: Broadcast mineral granules over all bitumen overruns on the finish ply surface, while the bitumen is still hot or the adhesive is soft, to ensure a monolithic surface color.

H. Flashing Application - masonry surfaces: Flash masonry parapet walls and curbs using the reinforcing sheet and the metal foil flashing membrane. After the base ply has been applied to the top of the cant, fully adhere the reinforcing sheet, utilizing minimum 3 inch side laps and extend a minimum of 3 inches onto the base ply surface and 3 inches up the parapet wall above the cant. After the final roofing ply has been applied to the top of the cant, prepare the surface area that is to receive flashing coverage by torch heating granular surfaces or by application of asphalt primer; allowing primer to dry thoroughly. Torch apply the metal foil-faced flashing into place using three foot widths (cut off the end of roll) always lapping the factory selvage edge. Stagger the laps of the metal foil flashing layer from lap seams in the reinforcing layer. Extend the flashing sheet a minimum of 4 inches beyond the toe of the cant onto the prepared surface of the finished roof and up the wall to the desired flashing height. Exert pressure on the flashing sheet during application to ensure complete contact with the wall/roof surfaces, preventing air pockets; this can be accomplished by using a damp sponge or shop rag. Check and seal all loose laps and edges. Nail the top edge of the flashing on 9 inch centers. (See manufacturer's schematic for visual interpretation).

I. Flashing Application – surfaces sheathed with gypsum sheathing panels: After the gypsum sheathing panel and cant backing sheet have been installed, flash parapet walls and curbs with the specified reinforcing sheet and the metal foil flashing membrane. The reinforcing sheet shall have minimum 3 inch side laps and extend a minimum of 3 inches onto the base ply surface and to the top of the parapet wall or curb. Using the specified fasteners, mechanically attach the reinforcing sheet through the field of the sheet to the vertical flashing surface on 12 inch centers from the top of the cant to the top of the wall or curb. Fully adhere the remainder of the flashing reinforcing sheet that extends over the cant and roof level. Using a Leister Hand Welding Tool, seal the laps between flashing reinforcing sheets. After the final roofing ply has been applied to the top of the cant, prepare the surface area that is to receive flashing

coverage by torch heating granular surfaces or by application of asphalt primer; allowing primer to dry thoroughly. Torch apply the metal foil-faced flashing into place using three foot widths (cut off the end of roll) always lapping the factory selvage edge. Stagger the laps of the metal foil flashing layer from lap seams in the reinforcing layer. Extend the flashing sheet a minimum of 4 inches beyond the toe of the cant onto the prepared surface of the finished roof and up the wall to the desired flashing height. Exert pressure on the flashing sheet during application to ensure complete contact with the wall/roof surfaces, preventing air pockets; this can be accomplished by using a damp sponge or shop rag. Check and seal all loose laps and edges. Nail the top edge of the flashing on 9 inch centers. (See manufacturer's schematic for visual interpretation).

J. Catalyzed Acrylic Resin Flashing System: Install the liquid-applied primer and flashing system in accordance with the membrane system manufacturer’s printed installer’s guidelines and other applicable written recommendations as provided by the manufacturer.

K. Use of Metallic Powder: Broadcast metallic powder over all bitumen overruns on the metal foil membrane surface while the bitumen is still hot to ensure a monolithic surface color.

L. Water Cut-Off: At end of day's work, or when precipitation is imminent, construct a water cut-off at all open edges. Cut-offs can be built using asphalt or plastic cement and roofing felts, constructed to withstand protracted periods of service. Cut-offs must be completely removed prior to the resumption of roofing.

3.05 Roof System Interface With Related Components:

A. Walktread: Cut the walktread into maximum 5 foot lengths and allow to relax until flat. Adhere the sheet using the specified plastic cement. Apply the specified cement in a 3/8 inch thickness to the back of the product in 5 inch by 5 inch spots in accordance with the pattern as supplied by the walktread manufacturer. Walk-in each sheet after application to ensure proper adhesion. Use a minimum spacing of 2 inches between sheets to allow for proper drainage.

B. Sealant: Apply a smooth continuous bead of the specified sealant at the exposed finish ply edge transition to metal flashings incorporated into the roof system.

3.06 Field Quality Control And Inspections:

A. Site Condition: Leave all areas around job site free of debris, roofing materials, equipment, and related items

after completion of job.

B. Notification Of Completion: Notify the manufacturer by means of manufacturer's printed Notification of Completion form of job completion in order to schedule a final inspection date.

C. Final Inspection:

1. Post-Installation Meeting: Hold a meeting at the completion of the project, attended by all parties that were present at the pre-job conference. A punch list of items required for completion shall be compiled by the Contractor and the manufacturer's representative. Complete, sign, and mail the punch list form to the manufacturer's headquarters.

D. Issuance Of The Guarantee: Complete all post installation procedures and meet the manufacturer's final endorsement for issuance of the specified guarantee.

End of Section

DIVISION 7 - THERMAL & MOISTURE PROTECTION

SECTION 07600 - FLASHING AND SHEET METAL

Part 1 - General

1.01 Work Included:
- A. All materials, labor, services and incidentals necessary for the completion of this section of the work.

1.02 Related Work Specified Elsewhere:
- A. Modified Bitumen Membrane Roofing System - Section 07550
- B. Sealants - Section 07900

1.03 Quality Assurance:
- A. Standards:
  - 1. American Society of Testing and Materials
    - a. ASTM A-526, Steel Sheet, Zinc-Coated (Galvanized), Commercial Quality.
    - b. ASTM B-32, Solder Metal
  - 2. Federal Specifications:
    - a. SS-C-153B, Cement, Bituminous, Plastics
  - 3. Sheet Metal and Air Conditioning Contractors National Association:
    - a. Architectural Sheet Metal Manual

1.04 **Products of certain manufacturers are specified herein to simplify descriptions of design, construction, and/or materials only. Proprietary names are not intended to imply that products of named manufacturer are required to the exclusion of equivalent products of other manufacturers.**

Part 2 - Products

2.01 Materials:
- A. Prefinished Sheet Metal overflow scuppers and Prefinished Metal Coping:
  - 1. Galvanized iron, prefinished one side.
  - 2. Gauge: 24 gauge, of design and width as detailed.
  - 3. Acceptable manufacturer: Color Klad - Vincent Brass and Aluminum Co.
  - 4. Finish: Kynar 500 - Refer Color Schedule
- B. Sheet Metal:
  - 1. Galvanized Sheet Steel: ASTM A-526, Commercial Quality.
  - 2. Gauge: 22 Gauge minimum or as required by Drawings or Specifications.
- C. Fasteners: Nails, screws, and other fasteners used in conjunction with this work shall be galvanized or cadmium plated.
- D. Solder: ASTM B-32, alloy grade 58, 50% tin, 50% lead.
- E. Flux: Muriatic acid with zinc.
- F. Sealants: Rubber based compound - refer to Section 07900.
- G. Bituminous Plastic Cement: FS SS-C-153B.

H. Accessories: Provide accessories as recommended by manufacturer or as indicated on Drawings.

Part 3 - Execution

3.01 Fabrication:

A. Shape and install sheet metal as indicated on Drawings. Comply with recommendations of SMACNA "Architectural Sheet Metal Manual."

B. Form exposed faces flat and free of buckles, excessive wave and tool marks. Provide uniform, neat seams with minimum exposure of solder, welds, and sealant.

C. Hem all exposed edges.

D. Make waterproof corner joints by soldering solidly. Joints shall be full-lapped.

E. Soldering: Shall be done slowly with well heated coppers to thoroughly heat the sheet and completely sweat the solder through the full width of the seam. Ample solder shall be used and the seam shall show a least one full inch of evenly flowed solder. Soldering coppers: Shall be heavy and blunt design, properly tinned before using. Neutralize all excess flux.

F. Provide for thermal expansion of running trim, flashing and other items exposed for more than 15'-0" continuous length. Locate expansion seams at 10'-0" intervals and 2'-0" each side of corners and intersections.

G. Angle bottom edges of exposed vertical surfaces to form drips.

3.02 Installation and Application:

A. General:

1. Furnish those items to be installed by other trades to proper grade for installation.
2. Cooperate with and coordinate installation of sheet metal with roofing work as specified under Modified Bitumen Membrane Roofing System - Section 07550.
3. Install work watertight, without waves, warps, buckles, fastening stresses or distortion, allowing for expansion and contraction.
4. Embed all flashing in plastic cement. Coat dissimilar metals from contact with bituminous coating.

B. Metal Coping:

1. Material: 24 gauge, prefinished sheet metal.
2. Fabricate and install in accordance with drawings, and recognized sheet metal practices.
3. Secure coping bedded in plastic cement to blocking.
4. At joints, bed coping in plastic cement and secure on side to backing strip by soldering solid. Do not use screws

or nails in exposed face to coping.

5. Lower edge of coping to be securely hooked to hook strip. Secure to wood blocking with No. 8 x 1" galvanized sheet metal screws at 8 o.c.

End of Section

DIVISION 7 - THERMAL & MOISTURE PROTECTION

SECTION 07840 - FIRESTOPPING

Part 1 - General

1.01 Related Documents:

A. Drawings and general provisions of Contract, including General and Supplementary Conditions and Division-1 Specification Section, apply to work specified in this section.

1.02 Definitions:

A. Firestopping: Material or combination of materials used to retain integrity of fire-rated construction by maintaining an effective barrier against the spread of flame, smoke, and hot gases through penetrations in, or construction joints between, fire rated wall and floor assemblies.

1.03 General Description of the Work:

A. Only tested firestop systems shall be used in specific locations as follows:

1. Penetrations for the passage of duct, cable, cable tray, conduit, piping, electrical busways and raceways through fire-rated vertical barriers (walls and partitions), horizontal barriers (floor/ceiling assemblies), and vertical service shaft walls and partitions.
2. Safing slot gaps between edge of floor slabs and curtain walls.
3. Openings between structurally separate sections of wall or floors.
4. Gaps between the top of walls and ceilings or roof assemblies.
5. Expansion joints in walls and floors.
6. Openings and penetrations in fire-rated partitions or walls containing fire doors.
7. Openings around structural members which penetrate floors or walls.

1.04 Related Work Specified Elsewhere:

A. Coordinate work of this section with work of other sections as required to properly execute the work and as necessary to maintain satisfactory progress of the work of other sections, including:

1. Section 03300 - Cast-In-Place Concrete
2. Section 04810 - Masonry
3. Section 07900 - Sealants
4. Section 09250 - Gypsum Wallboard
5. Section ***** - Fire Suppression Piping
6. Section ***** - Common Work Results for Plumbing
7. Section ***** – Common Work Results for HVAC
8. Section ***** - HVAC Insulation
9. Section ***** - Basic Electrical Materials and Methods

SECTION 07840 - FIRESTOPPING

1.05 References:

A. Test Requirements: ASTM E 814, "Standard Method of Fire Tests of Through Penetration Fire Stops".

B. Test Requirements: UL 1479, "Fire Tests of Through-Penetration Firestops".

C. Test Requirements: UL 2079, "Tests for Fire Resistance of Building Joint Systems".

D. Underwriters Laboratories (UL) of Northbrook, IL publishes tested systems in their "FIRE RESISTANCE DIRECTORY" that is updated annually.

1. UL Fire Resistance Directory:
   a. Firestop Devices (XHJI)
   b. Fire Resistance Ratings (BXRH)
   c. Through-Penetration Firestop Systems (XHEZ)
   d. Fill, Voids, or Cavity Material (XHHW)
   e. Forming Materials (XHKU)
   f. Joint Systems (XHBN)
   g. Perimeter Fire Containment Systems (XHDG)
2. Alternate Systems: "Omega Point Laboratories Directory" (updated annually).

E. Test Requirements: ASTM E 1966, "Standard Test Method for Fire Resistive Joint Systems".

F. Inspection Requirements: ASTM E 2174, "Standard Practice for On-site Inspection of Installed Fire Stops".

H. ASTM E 84, "Standard Test Method for Surface Burning Characteristics of Building Materials".

I. International Firestop Council Guidelines for Evaluating Firestop Systems Engineering Judgments.

J. All major building codes: ICBO, SBCCI, BOCA, IBC

K. NFPA 101 - Life Safety Code

L. NFPA 70 - National Electric Code

THROUGH-PENETRATION UL CLASSIFICATION SYSTEM

	Fire Stopping Systems	Construction Penetrated	Type Of Construction	UL Classification System Identification
1	No Penetrating Items:	F, W, C	A, B, J, K, L	0001-0999
2	Metallic Pipes, Conduit or Tubing:	F, W, C	A, B, J, K, L	1001-1999
3	Nonmetallic Pipe, Conduit or Tubing:	F, W, C	A, B, J, K, L	2001-2999
4	Electric Cables:	F, W, C	A, B, J, K, L	3001-3999
5	Cable, Trays with Electric Cables:	F, W, C	A, B, J, K, L	4001-4999
6	Insulated Pipes:	F, W, C	A, B, J, K, L	5001-5999

7	Electrical Bussduct Penetrations:	F, W, C	A, B, J, K, L	6001-6999
8	Mechanical Ductwork Penetrations:	F, W, C	A, B, J, K, L	7001-7999
9	Multiple Penetrations Through Common Openings:	F, W, C	A, B, J, K, L	8000-8999

Construction Penetration

F	Floor penetration
W	Wall penetration
C	Either floor or wall penetration

Type of Construction

A-	Concrete floors equal to of less than 5-inches thick
B-	Concrete floors greater than 5-inches thick
J-	Concrete or masonry walls equal to or less than 8-inches thick
K-	Concrete of masonry walls greater than 8-inches thick
L-	Framed walls

JOINT UL CLASSIFICATION SYSTEM

Fire-Resistant Joint Systems		UL Classification System		
		Joint System	Movement Capability	Joint Width
1	Floor-to-Floor	FF	D	0000-0999
2	Wall-to-Wall	WW	D	0000-0999
3	Floor-to-Wall:	FW	D	0000-0999
4	Head of Wall:	HW	D	0000-0999

Movement Capability

D-	Has movement capability

Joint Width

0000-0999	Less than or equal to 2-inches

1.06 Quality Assurance

A. Installer Responsibilities: A firm experienced installing through-penetration firestop systems similar in material, design and extent to that indicated for this Project, whose

work has resulted in construction with a record of successful performance. Qualifications include having the necessary experience, staff, and training to install manufacturer's products per specified requirements.

B. Firestop System installation must meet requirements of ASTM E 814, UL 1479 or UL 2079 tested assemblies that provide a fire rating equal to that of construction being penetrated.

C. Proposed firestop materials and methods shall conform to applicable governing codes having local jurisdiction.

D. Installation Responsibility: Assign installation of through-penetration firestop systems and fire-resistive joint systems in Project to a single qualified installer.

E. Source Limitations: Obtain through-penetration firestop systems, for each kind of penetration and construction condition indicated, through one source from a single manufacturer.

1.07 Submittals:

A. Submit Product Data: Manufacturer's specifications and technical data for each material including the composition and limitations, documentation of qualified tested firestop systems to be used and manufacturer's installation instructions.

B. Submit Manufacturer's engineering judgment identification number and drawing details when no qualified tested system is available for an application. Engineering judgment must include both project name and contractor's name who will install firestop system as described in document.

C. Submit material safety data sheets provided with product delivered to job-site.

1.08 Installer Qualifications:

A. Engage an experienced Installer who is certified, licensed, or otherwise qualified by the firestopping manufacturer as having been provided the necessary training to install manufacturer's products per specified requirements.

B. The work is to be installed by a contractor with at least one of the following qualifications:

1. FM 4991 Approved Contractor
2. UL Approved Contractor
3. Hilti Accredited Fire Stop Specialty Contractor

C. Installer shall have not less than 3 years of experience with fire stop installation.

1.09 Delivery, Storage and Handling:

A. Deliver materials undamaged in manufacturer's clearly labeled, unopened containers, identified with brand, type, and UL label where applicable.

B. Coordinate delivery of materials with scheduled installation date to allow minimum storage time at jobsite.

C. Store materials under cover and protect from weather and

damage in compliance with manufacturer's requirements, including temperature restrictions.

D. Comply with recommended procedures, precautions or remedies described in material safety data sheets as applicable.

E. Do not use damaged or expired materials.

1.10 Project Conditions:

A. Do not use materials that contain flammable solvents.

B. Schedule installation of firestopping after completion of penetrating item installation but prior to covering or concealing of openings.

C. Verify existing conditions and substrates before starting work. Correct unsatisfactory conditions before proceeding.

D. Weather conditions: Do not proceed with installation of firestop materials when temperatures exceed the manufacturer's recommended limitations for installation printed on product label and product data sheet.

E. During installation, provide masking and drop cloths to prevent firestopping materials from contaminating any adjacent surfaces.

1.11 **Products of certain manufacturers are specified herein to simplify descriptions of design, construction, and/or materials only. Proprietary names are not intended to imply that products of named manufacturer are required to the exclusion of equivalent products of other manufacturers, providing they meet or exceed that specified.**

Part 2 – Products

2.01 Firestopping, General:

A. Provide firestopping composed of components that are compatible with each other, the substrates forming openings, and the items, if any, penetrating the firestopping under conditions of service and application, as demonstrated by the firestopping manufacturer based on testing and field experience.

B. Provide components for each firestopping system that are needed to install fill material. Use only components specified by the firestopping manufacturer and approved by the qualified testing agency for the designated fire-resistance-rated systems.

C. Firestopping Materials are either “cast-in-place” (integral with concrete placement) or “post installed.” Provide cast-in-place firestop devices prior to concrete placement.

2.02 Acceptable Manufacturers:

A. Subject to compliance with through penetration firestop systems (XHEZ), joint systems (XHBN), and perimeter firestop systems (XHDG) listed in Volume 2 of the UL Fire Resistance Directory; provide products of the following manufacturers

as identified below:

1. Hilti, Inc., Tulsa, Oklahoma
   800-879-8000 / www.us.hilti.com

2.03 Materials:

A. Use only firestop products that have been UL 1479, ASTM E 814 or UL 2079 tested for specific fire-rated construction conditions conforming to construction assembly type, penetrating item type, annular space requirements, and fire-rating involved for each separate instance.

B. Pre-installed firestop devices for use with noncombustible and combustible pipes (closed and open systems), conduit, and/or cable bundles penetrating concrete floors and/or gypsum walls, the following products are acceptable:
   1. Hilti CP 680-P Cast-In Place Firestop Device
      a. Add Aerator adaptor when used in conjunction with aerator ("solvent") system.
   2. Hilti CP 681 Tub Box Kit for use with tub installations.
   3. Hilti CP 680-M Cast-In Place Firestop Device for use with noncombustible penetrants.
   4. Hilti CP 653 Speed Sleeve for use with cable penetrations.

C. Sealants, caulking materials, or foams for use with non-combustible items including steel pipe, copper pipe, rigid steel conduit and electrical metallic tubing (EMT), the following products are acceptable:
   1. Hilti FS-ONE Intumescent Firestop Sealant
   2. Hilti CP 604 Self-leveling Firestop Sealant
   3. Hilti CP 620 Fire Foam
   4. Hilti CP 606 Flexible Firestop Sealant
   5. Hilti CP 601s Elastomeric Firestop Sealant

D. Sealants or caulking materials for use with sheet metal ducts, the following products are acceptable:
   1. Hilti CP 601s Elastomeric Firestop Sealant
   2. Hilti CP 606 Flexible Firestop Sealant
   3. Hilti FS-ONE Intumescent Firestop Sealant

E. Sealants, caulking or spray materials for use with fire-rated construction joints and other gaps, the following products are acceptable:
   1. Hilti CP 672 Speed Spray
   2. Hilti CP 601s Elastomeric Firestop Sealant
   3. Hilti CP 606 Flexible Firestop Sealant
   4. Hilti CP 604 Self-leveling Firestop Sealant

F. Pre-formed mineral wool designed to fit flutes of metal profile deck and gap between top of wall and metal profile deck; as a backer for spray material.
   1. Hilti CP 777 Speed Plugs
   2. Hilti CP 767 Speed Strips

G. Intumescent sealants, caulking materials for use with combustible items (penetrants consumed by high heat and flame) including insulated metal pipe, PVC jacketed, flexible cable or cable bundles and plastic pipe, the following products are acceptable:
   1. Hilti FS-ONE Intumescent Firestop Sealant

H. Foams, intumescent sealants, or caulking materials for use with flexible cable or cable bundles, the following products are acceptable:
   1. Hilti FS-ONE Intumescent Firestop Sealant
   2. Hilti CP 620 Fire Foam
   3. Hilti CP 601s Elastomeric Firestop Sealant
   4. Hilti CP 606 Flexible Firestop Sealant

I. Non-curing, re-penetrable intumescent putty or foam materials for use with flexible cable or cable bundles, the following products are acceptable:
   1. Hilti CP 618 Firestop Putty Stick
   2. Hilti CP 658T Firestop Plug

J. Wall opening protective materials for use with U.L. listed metallic and specified nonmetallic outlet boxes, the following products are acceptable:
   1. Hilti CP 617 Firestop Putty Pad
   2. Hilti Firestop Box Insert

K. Firestop collar or wrap devices attached to assembly around combustible plastic pipe (closed and open piping systems), the following products are acceptable:
   1. Hilti CP 643N Firestop Collar
   2. Hilti CP 644 Firestop Collar
   3. Hilti CP 648E/CP648S Wrap Strips

L. Materials used for large openings and complex penetrations made to accommodate cable trays and bundles, multiple steel and copper pipes, electrical busways in raceways, the following products are acceptable:
   1. Hilti CP 637 Firestop Mortar
   3. Hilti FS 657 FIRE BLOCK
   4. Hilti CP 620 Fire Foam
   5. Hilti CP 675T Firestop Board

M. Non curing, re-penetrable materials used for large size/complex penetrations made to accommodate cable trays and bundles, multiple steel and copper pipes, electrical busways in raceways, the following products are acceptable:
   1. Hilti FS 657 FIRE BLOCK
   2. Hilti CP 675T Firestop Board

N. Sealants or caulking materials used for openings between structurally separate sections of wall and floors, the following products are acceptable:
   1. Hilti CP 672 Speed Spray
   2. Hilti CP 601s Elastomeric Firestop Sealant

3. Hilti CP 606 Flexible Firestop Sealant
4. Hilti CP 604 Self-Leveling Firestop Sealant

O. For blank openings made in fire-rated wall or floor assemblies, where future penetration of pipes, conduits, or cables is expected, the following products are acceptable:
1. Hilti FS 657 FIRE BLOCK
2. Hilti CP 658T Firestop Plug

P. Provide a firestop system with a "F" Rating as determined by UL 1479 or ASTM E814 which is equal to the time rating of construction being penetrated.

Q. Provide a firestop system with an Assembly Rating as determined by UL 2079 which is equal to the time rating of construction joint assembly.

Part 3 - Execution

3.01 Preparation:

A. Verification of Conditions: Examine areas and conditions under which work is to be performed and identify conditions detrimental to proper or timely completion.
1. Verify penetrations are properly sized and in suitable condition for application of materials.
2. Surfaces to which firestop materials will be applied shall be free of dirt, grease, oil, rust, laitance, release agents, water repellents, and any other substances that may affect proper adhesion.
3. Provide masking and temporary covering to prevent soiling of adjacent surfaces by firestopping materials.
4. Comply with manufacturer's recommendations for temperature and humidity conditions before, during and after installation of firestopping.
5. Do not proceed until unsatisfactory conditions have been corrected.

3.02 Coordination:

A. Coordinate location and proper selection of cast-in-place Firestop Devices with trade responsible for the work. Ensure device is installed before placement of concrete.

B. Responsible trades to provide adequate spacing of field run pipes to allow for installation of cast-in-place firestop devices without interferences.

3.03 Installation:

A. Regulatory Requirements: Install firestop materials in accordance with UL Fire Resistance Directory or Omega Point Laboratories Directory.

B. Manufacturer's Instructions: Comply with manufacturer's instructions for installation of through-penetration and construction joint materials.
1. Seal all holes or voids made by penetrations to ensure

an air and water resistant seal.

2. Consult with mechanical engineer, project manager, and damper manufacturer prior to installation of UL firestop systems that might hamper the performance of fire dampers as it pertains to duct work.
3. Protect materials from damage on surfaces subjected to traffic.

3.04 Field Quality Control:

A. Examine sealed penetration areas to ensure proper installation before concealing or enclosing areas.
B. Keep areas of work accessible until inspection by applicable code authorities.
C. Inspection of through-penetration firestopping shall be performed in accordance with ASTM E 2174, “Standard Practice for On-Site Inspection of Installed Fire Stops” or other recognized standard.
D. Perform under this section patching and repairing of firestopping caused by cutting or penetrating of existing firestop systems already installed by other trades.

3.05 Identification:

A. Identify through-penetration firestop systems with pressure-sensitive, self-adhesive, preprinted vinyl labels. Attach labels permanently to surfaces of penetrated construction on both sides of each firestop system installation where labels will be visible to anyone seeking to remove penetrating items or firestop systems. Include the following information on labels:
   1. The words: "Warning -Through Penetration Firestop System-Do Not Disturb. Notify Building Management of Any Damage."
   2. Contractor's Name, address, and phone number.
   3. Through-Penetration firestop system designation of applicable testing and inspecting agency.
   4. Date of Installation.
   5. Through-Penetration firestop system manufacturer's name.
   6. Installer's Name.

3.06 Adjusting and Cleaning:

A. Remove equipment, materials and debris, leaving area in undamaged, clean condition.
B. Clean all surfaces adjacent to sealed holes and joints to be free of excess firestop materials and soiling as work progresses.

End of Section

DIVISION 7 - THERMAL & MOISTURE PROTECTION

SECTION 07900 - SEALANTS

Part 1 - General

1.01 Work Included:
A. All materials, labor services, and incidentals necessary for the completion of this section of the work.

1.02 Quality Assurance:
A. Standards:
1. TT-S-00230C, Sealing Compound, One Component.
2. Testing Agency Qualifications: Qualified according to ASTM C 1021 to conduct the testing indicated.

1.03 Submittals:
A. Submit manufacturer's specifications and color chart for each type of sealant.
B. Samples: For each kind and color of joint sealant required.
C. Joint-Sealant Schedule: Include the following information:
1. Joint-sealant application, joint location, and designation.
2. Joint-sealant manufacturer and product name.
3. Joint-sealant formulation.
4. Joint-sealant color.
D. Product test reports.
E. Preconstruction compatibility and adhesion test reports.
F. Preconstruction field-adhesion test reports.
G. Field-adhesion test reports.

1.04 Warranty:
A. All work done under this section of the work shall be guaranteed for a period of two years from date of final acceptance of the building. Guarantee shall include materials and workmanship required to repair any leaks or the repairs thereof.
B. Special Warranty: Manufacturer’s standard form in which joint sealant manufacturer agrees to furnish joint sealants to repair or replace those that do not comply with performance and other requirements specified in this Section for a period of 10 years from date of final acceptance.

1.05 **Products of certain manufacturers are specified herein to simplify descriptions of design, construction, and/or materials only. Proprietary names are not intended to imply that products of named manufacturer are required to the exclusion of equivalent products of other manufacturers.**

Part 2 - Products

2.01 Materials:
A. Building Sealant: One part high performance polyurethane waterproofing sealant, FS-TT-S-00230C.
1. Acceptable Manufacturer: Sonneborn NP1 Building Sealant.
2. VOC Content of Interior Sealants: Sealants and sealant primers used inside the weatherproofing system shall

comply with the following limits for VOC content when calculated according to 40 CPR 59, Subpart D (EPA Method 24):

a Architectural Sealants: 250 gIL.

b. Sealant Primers for Nonporous Substrates: 250 gIL.

c. Sealant Primers for Porous Substrates: 775 gIL.

3. Liquid-Applied Joint Sealants: Comply with ASTM C 920 and other requirements indicated for each liquid-applied joint sealant specified, including those referencing ASTM C 920 classifications for type, grade, class, and uses related to exposure and joint substrates.

a. Suitability for Immersion in Liquids. Where sealants are indicated for Use I for joints that will be continuously immersed in liquids, provide products that have undergone testing according to ASTM C 1247. Liquid used for testing sealants is deionized water, unless otherwise indicated.

4. Stain-Test-Response Characteristics: Where sealants are specified to be nonstaining to porous substrates, provide products that have undergone testing according to ASTM C 1248 and have not stained porous joint substrates indicated for Project.

5. Suitability for Contact with Food: Where sealants are indicated for joints that will come in repeated contact with food, provide products that comply with 21 CPR 177.2600.

B. Silicone Joint Sealants:

1. Mildew-Resistant Neutral-Curing Silicone Joint Sealant: ASTM C 920.

a. Manufacturers: Subject to compliance with requirements, available manufacturers offering products that may be incorporated into the Work include, but are not limited to, the following:

1. BASF Building Systems.

2. Dow Corning Corporation.

3. GE Advanced Materials - Silicones.

4. Pecora Corporation.

5. Sika Corporation; Construction Products Division.

6. Tremco Incorporated.

C. Urethane Joint Sealants: Urethane Joint Sealant: ASTM C 920.

1. Manufacturers: Subject to compliance with requirements, available manufacturers offering products that may be incorporated into the Work

include, but are not limited to, the following:
a. BASF Building Systems.
b. Bostik, Inc.
c. Lymtal, International, Inc.
d. Pecora Corporation.
e. Sika Corporation; Construction Products Division.
f. Tremco Incorporated.

D. Latex Joint Sealants: Latex Joint Sealant: Acrylic latex or siliconized acrylic latex, ASTM C 834, Type OP, GradeNF.
1. Manufacturers: Subject to compliance with requirements, available manufacturers offering products that may be incorporated into the Work include, but are not limited to, the following:
a. BASF Building Systems.
b. Bostik, Inc.
c. Pecora Corporation.
d. Tremco Incorporated.

E. Preformed Joint Sealants: Preformed Foam Joint Sealant: Manufacturer's standard preformed, precompressed, open-cell foam sealant manufactured from urethane foam with minimum density of 10 lb/cu. ft. and impregnated with a nondrying, water-repellent agent. Factory produce in precompressed sizes in roll or stick form to fit joint widths indicated; coated on one side with a pressure-sensitive adhesive and covered with protective wrapping.
1. Manufacturers: Subject to compliance with requirements, available manufacturers offering products that may be incorporated into the Work include, but are not limited to, the following:
a. Dayton Superior Specialty Chemicals.
b. EM SEAL Joint Systems, Ltd.
c. Sandell Manufacturing Co.
d. Schul International, Inc.
e. Willseal USA, LLC.

F. Acoustical Joint Sealants: Acoustical Joint Sealant: Manufacturer's standard nonsag, paintable, nonstaining latex sealant complying with ASTM C 834. Product effectively reduces airborne sound transmission through perimeter joints and openings in building construction as demonstrated by testing representative assemblies according to ASTM E 90.
1. Manufacturers: Subject to compliance with requirements, available manufacturers offering products that may be incorporated into the Work include, but are not limited to, the following:
a. Pecora Corporation.
b. USG Corporation.

G. Joint Sealant Backing: cylindrical Sealant Backings: ASTM C 1330, Type C (closed-cell material with a surface skin) Type 0 (open-cell material) or any of the preceding types, as approved in writing by joint sealant manufacturer for joint application indicated, and of size and density to control sealant depth and otherwise contribute to producing optimum sealant performance.
   1. Bond-Breaker Tape: Polyethylene tape or other plastic tape recommended by sealant manufacturer.

H. Miscellaneous Materials: as recommended by sealant manufacturer.
   1. Primer: Material recommended by joint-sealant manufacturer where required for adhesion of sealant to joint substrates indicated, as determined from preconstruction joint-sealant-substrate tests and field tests.
   2. Cleaners for Nonporous Surfaces: Chemical cleaners acceptable to manufacturers of sealants and sealant backing materials.
   3. Masking Tape: Nonstaining, nonabsorbent material compatible with joint sealants and surfaces adjacent to joints.
   4. Joint Cleaner
   5. Joint Primer/Sealer
   6. Bond Breaker Tape
   7. Joint Backer-Rod: Closed-cell compressible rod stock, size and shape as required by application.

I. Caulking compound: Watertight, gun consistency, conforming to FS-TT-C-598, Type 1.

J. Accessories: As recommended by sealant manufacturer.

K. Color: to be selected from manufacturer’s standard colors.

Part 3 - Execution

3.01 Preparation:

A. Surface Cleaning of Joints: Clean out joints immediately before installing joint sealants to comply with joint-sealant manufacturer's written instructions.
   1. Remove laitance and form-release agents from concrete.
   2. Clean nonporous joint substrate surfaces with chemical cleaners or other means that do not stain, harm substrates, or leave residues capable of interfering with adhesion of joint sealants.

B. Joint Priming: Prime joint substrates where recommended by joint-sealant manufacturer or as indicated by preconstruction joint-sealant-substrate tests or prior experience. Apply primer to comply with joint-sealant manufacturer's written instructions. Confine primers to

areas of joint sealant bond; do not allow spillage or migration onto adjoining surfaces.

C. Masking Tape: Use masking tape where required to prevent contact of sealant or primer with adjoining surfaces that otherwise would be permanently stained or damaged by such contact or by cleaning methods required to remove sealant smears. Remove tape immediately after tooling without disturbing joint seal.

3.02 Installation: Comply with recommendations in ASTM C 1193 for use of joint sealants as applicable to materials, applications, and conditions indicated. Install sealant backings of kind indicated to support sealants during application and at position required to produce cross-sectional shapes and depths of installed sealants relative to joint widths that allow optimum sealant movement capability.

A. Do not leave gaps between ends of sealant backings.

B. Do not stretch, twist, puncture, or tear sealant backings.

C. Remove absorbent sealant backings that have become wet before sealant application and replace them with dry materials.

D. Install bond-breaker tape behind sealants where sealant backings are not used between sealants and backs of joints.

E. Install sealants using proven techniques that comply with the following and at the same time backings are installed:

1. Place sealants so they directly contact and fully wet joint substrates.
2. Completely fill recesses in each joint configuration.
3. Produce uniform, cross-sectional shapes and depths relative to joint widths that allow optimum sealant movement capability.

F. Tooling of Nonsag Sealants: Immediately after sealant application and before skinning or curing begins, tool sealants according to requirements specified in subparagraphs below to form smooth, uniform beads of configuration indicated; to eliminate air pockets; and to ensure contact and adhesion of sealant with sides of joint.

1. Remove excess sealant from surfaces adjacent to joints.
2. Use tooling agents that are approved in writing by sealant manufacturer and that do not discolor sealants or adjacent surfaces.
3. Provide concave joint profile per Figure 8A in ASTM C 1193, unless otherwise indicated.

G. Acoustical Sealant Installation: Comply with ASTM C 919 and with manufacturer's written recommendations.

H. Clean off excess sealant or sealant smears adjacent to joints as the Work progresses by methods and with cleaning

materials approved in writing by manufacturers of joint sealants and of products in which joints occur.

3.03 Joint Sealant Schedule:

A. Joint-Sealant Application: Exterior joints in horizontal traffic surfaces.

B. Joint-Sealant Application: Exterior joints in vertical surfaces and horizontal nontraffic surfaces.

C. Joint-Sealant Application: Interior joints in horizontal traffic surfaces.

D. Joint-Sealant Application: Interior joints in vertical surfaces and horizontal non traffic surfaces.

E. Joint-Sealant Application: Mildew-resistant interior joints in vertical surfaces and horizontal non-traffic surfaces.

F. Joint-Sealant Application: Interior acoustical joints in vertical surfaces and horizontal non traffic surfaces.

3.04 Additional Information:

A. Application: All sight exposed caulking, and all exterior applications.

B. Comply with sealant manufacturer's printed instructions.

C. Any surfaces requiring priming, shall be prepared according to manufacturer's recommendations.

D. Install sealants to depths as shown or as recommended by sealant manufacturer. Smooth uneven surfaces.

F. Do not disturb compound by touching, washing, or otherwise until it has cured tack free.

G. Excess compound shall be removed from surfaces after curing.

H. Follow manufacturer's recommendations for painting over sealant.

End of Section

SECTION 08100 - METAL DOORS AND FRAMES

Part 1 - General

1.01 Work Included:
- A. All material labor, services and incidentals necessary for the completion of this section of the work.

1.02 Related Work Specified Elsewhere:
- A. Hardware and Specialties - Section 08700

1.03 Quality Assurance:
- A. Standards:
  1. American Society for Testing and Materials
     - a. ASTM A-366, Steel Sheets, Carbon, Cold-Rolled, Commercial Quality.
     - b. ASTM A-569, Steel, Carbon, Hot-rolled Sheet and strip, commercial quality.
  2. Underwriters' Laboratories, Inc.
  3. Steel Door Institute (SDI): Recommended specifications for Steel Doors and Frames.
- B. Installer Qualifications: An employer of workers trained and approved by manufacturer.
- C. Source Limitations: Obtain standard steel doors and frames through one source from a single manufacturer.
- D. Fire-Rated Door Frame Assemblies: Assemblies complying with IBC 2009 that are listed and labeled by a testing and inspecting agency acceptable to authorities having jurisdiction, for fire protection ratings indicated.
  1. Test Pressure: Test according to NFPA 252. After 5 minutes into the test, the neutral pressure level in furnace shall be established at 40 inches (1000 mm) or less above the sill.
  2. Temperature-Rise Rating: At exit enclosures, provide doors that have a temperature-rise rating of 450 deg F (250 deg C) maximum in 30 minutes of fire exposure.
  3. Smoke-Control Door Assemblies: Comply with NFPA 105.

1.04 Submittals:
- A. Shop Drawings: Product Data: Include construction details, material descriptions, core descriptions, label compliance, and finishes for each type of steel door and frame specified.
  1. Submit shop Drawings showing details for each frame and door type, elevations and details of construction. Provide a schedule of doors and frames referenced to detail and openings as shown on the Drawings.
     - a. Elevations of each door design.
     - b. Details of doors, including vertical and horizontal edge details.
     - c. Frame details for each frame type, including dimensioned profiles.
     - d. Details and locations of reinforcement and

preparations for hardware.
e. Details of each different wall opening condition.
f. Details of anchorages, accessories, joints, and connections.
g. Details of glazing frames and stops showing glazing.
h. Details of conduit and preparations for electrified door hardware and controls.

2. It is the manufacturer's responsibility to obtain templates of finish hardware. The shop Drawings must indicate all hardware applications to the doors and frames.
3. Begin fabrication only after receiving approved shop Drawings.
4. Qualification Data: For Installer.

1.05 Product Delivery, Storage and Handling:

A. All materials shall be protected for shipping so that they may arrive at the job site without undue damage or damage from storage at the job.
B. Deliver doors and frames palletized, wrapped, or crated to provide protection during transit and Project-site storage. Do not use non-vented plastic.
C. Deliver welded frames with two removable spreader bars across bottom of frames, tack welded to jambs and mullions.
D. Store doors and frames under cover at Project site. Place units in a vertical position with heads up, spaced by blocking, on minimum 4-inch- high wood blocking. Avoid using non-vented plastic or canvas shelters that could create a humidity chamber.
1. If wrappers on doors become wet, remove cartons immediately. Provide minimum 114-inch space between each stacked door to permit air circulation.

1.06 Project Conditions:

A. Field Measurements: Verify openings by field measurements before fabrication and indicate measurements on Shop Drawings.
1. Established Dimensions: Where field measurements cannot be made without delaying the Work, establish opening dimensions and proceed with fabricating standard steel frames without field measurements. Coordinate wall construction to ensure that actual opening dimensions correspond to established dimensions.

1.07 Coordination:

A. Coordinate installation of anchorages for standard steel frames. Furnish setting drawings, templates, and directions for installing anchorages, including sleeves,

concrete inserts, anchor bolts, and items with integral anchors, that are to be embedded in masonry. Deliver such items to Project site in time for installation.

1.08 Warranty: Provide manufacturer's standard warranty.

Part 2 - Products

2.01 Acceptable Manufacturers:

A. Manufacturers: Subject to compliance with requirements, provide products by one of the following:

1. CURRIES Company; an ASSA ABLOY Group Company.
2. Steelkraft; and Ingersoll-Rand Company.
3. Or Approved Equal.

2.02 Materials:

A. Cold-Rolled Steel Sheet: ASTM A 100S/A 100SM, Commercial Steel (CS), Type B; suitable for exposed applications.

B. Hot-Rolled Steel Sheet: ASTM A 10111A 1011M, Commercial Steel (CS), Type B; free of scale, pitting, or surface defects; pickled and oiled.

C. Metallic-Coated Steel Sheet: ASTM A 653/A 653M, Commercial Steel (CS), Type B; with minimum A40 zinc-iron-alloy (galvannealed) coating designation.

D. Electrolytic Zinc-Coated Steel Sheet: ASTM A 5911A 59 1M, Commercial Steel (CS), Class B coating; mill phosphatized.

E. Supports and Anchors: After fabricating, galvanize units to be built into exterior walls according to ASTM A 153/A 153M, Class B.

F. Inserts, Bolts, and Fasteners: Provide items to be built into exterior walls, hot-dip galvanized according to ASTM A 153/A 153M.

G. Mineral-Fiber Insulation: ASTM C 665, Type I (blankets without membrane facing); consisting of fibers manufactured from slag or rock wool with 6- to 12-lb/cu. ft. density; with maximum flame-spread and smoke-developed indexes of 25 and 50 respectively; passing ASTM E 136 for combustion characteristics.

H. Glazing: Comply with requirements in Division S Section "Glazing."

I. Bituminous Coating: Cold-applied asphalt mastic, SSPC-Paint 12, compounded for I5-mil dry film thickness per coat. Provide inert-type noncorrosive compound free of asbestos fibers, sulfur components, and other deleterious impurities.

J. Grout: In masonry construction use grout for masonry as specified in Division 4. In stud walls use cementitious sprayed fire-resistive material manufactured by the following:

1. Monokote Type MK-6; W.R. Grace Construction Products.
2. Cafco 300; Isolatek International Corp.

2.03 Requirements: Provide doors of design indicated, not less than thickness indicated; fabricated with smooth surfaces, without visible joints or seams on exposed faces, unless otherwise indicated. Comply with ANSI A250.8.

A. Doors – Flush Panel: (SDI Door Type III, Style 2, Seamless):
   1. Door, as indicated on the Drawings shall be constructed of 16 gauge cold-rolled, stretcher leveled sheet steel. Doors shall be insulated with foamed urethane, full length and width of doors. Construct doors with smooth, flush surfaces without visible joints or seams on exposed face or vertical edges. Doors shall be 1-3/4” thick unless noted otherwise.
   2. Close top and bottom edges with a recessed channel end closure or a flush end closure treatment.
   3. Vertical Edges for Single-Acting Doors: Square edge unless beveled edge is indicated.
      a. Beveled Edge: 1/8 inch in 2 inches.
   4. Vertical Edges for Double-Acting Doors: Round vertical edges with 2-1/8-inch radius.
   5. Tolerances: Comply with SDI 117, "Manufacturing Tolerances for Standard Steel Doors and Frames."
   6. Provide weep-hole openings in bottom of exterior doors to permit moisture to escape. Seal joints in top edges of doors against water penetration.

B. Frames:
   1. Hollow metal frames shall be of 16 gauge cold-rolled, pickled steel, except that all frames for single doors over 3'-0" wide, frames for pairs of doors over 4'-0" wide and frames for doors over 9'-0" high shall be of 14 gauge steel. Frames shall be neatly mitered and continuously welded and ground smooth for invisible joints.
   2. Furnish anchors as shown on Drawings or as recommended by manufacturer, to secure frames to adjacent construction, formed of not less than 18 gauge galvanized steel. Install anchors at a maximum of 24' centers of jamb height.
   3. Frames against masonry or concrete are to be slush filled.
   4. Knock-down frames are not permitted.
   5. Frames against masonry or concrete are to be slush filled.
   6. Jamb Anchors:
      a. Masonry Type: Adjustable strap-and-stirrup or T - shaped anchors to suit frame size, not less than 0.042 inch thick, with corrugated or perforated

straps not less than 2 inches wide by 10 inches long; or wire anchors not less than 0.177 inch thick.

b. Stud-Wall Type: Designed to engage stud, welded to back of frames; not less than 0.042 inch thick.

c. Floor Anchors: Formed from same material as frames, not less than 0.042 inch thick, and as follows:

1. Monolithic Concrete Slabs: Clip-type anchors, with two holes to receive fasteners.

2. Separate Topping Concrete Slabs: Adjustable-type anchors with extension clips, allowing not less than 2-inch height adjustment. Terminate bottom of frames at finish floor surface. Fabricate concealed stiffeners and hardware reinforcement from either cold- or hot-rolled steel sheet.

d. Ceiling Struts: Minimum 3/8-inch-thick by 2-inch-wide steel.

e. Plaster Guards: Formed from same material as frames, not less than 0.016-inch thick.

7. Sidelight Frames: Provide closed tubular members with no visible face seams or joints; fabricated from same material as door frame. Fasten members at crossings and to jambs by butt welding.

C. Hardware Reinforcement:

1. Reinforcements for locks shall be 3/16" for fronts, with 14 gauge for roses and escutcheons. Hinge reinforcements shall be at least 10 gauge x 1 2" x 9". Provide steel strike and hinge reinforcement cover for frames.

D. Jamb Anchors: Provide number and spacing of anchors as follows:

1. Masonry Type: Locate anchors not more than 18 inches from top and bottom of frame. Space anchors not more than 32 inches o.c. and as follows:

a. Two anchors per jamb up to 60 inches in height.

b. Three anchors per jamb from 60 to 90 inches in height.

c. Four anchors per jamb from 90 to 120 inches in height.

d. Four anchors per jamb plus 1 additional anchor per jamb for each 24 inches or fraction thereof more than 120 inches in height.

2. Stud-Wall Type: Locate anchors not more than 18 inches

from top and bottom of frame. Space anchors not more than 32 inches o.c. and as follows:

a. Three anchors per jamb up to 60 inches in height.
b. Four anchors per jamb from 60 to 90 inches in height.
c. Five anchors per jamb from 90 to 96 inches in height.
d. Five anchors per jamb plus 1 additional anchor per jamb for each 24 inches or fraction thereof more than 96 inches in height.
e. Two anchors per head for frames more than 42 inches wide and mounted in metal-stud partitions.

E. Door Silencers: Except on weather-stripped doors, drill stops to receive door silencers as follows. Provide plastic plugs to keep holes clear during construction.
1. Single-Door Frames: Drill stop in strike jamb to receive three door silencers.
2. Double-Door Frames: Drill stop in head jamb to receive two door silencers.

F. Stops and Moldings:
1. Moldings for Glazed Lites in Doors: Minimum 0.032 inch thick, fabricated from same material as door face sheet in which they are installed.
2. Fixed Frame Moldings: Formed integral with standard steel frames, minimum 5/8 inch high, unless otherwise indicated.
3. Loose Stops for Glazed Lites in Frames: Minimum 0.032 inch thick, fabricated from same material as frames in which they are installed.

G. Labeled Doors and Frames:
1. Where doors and frames are called for on Drawings as labeled, their construction shall conform to all requirements and bear the appropriate U.L. label.

H. Steel Finishes
1. General: Comply with NAAMM's "Metal Finishes Manual for Architectural and Metal Products" for recommendations for applying and designating finishes.
a. Finish standard steel door and frames after assembly.
2. Metallic-Coated Steel Surface Preparation: Clean surfaces with nonpetroleum solvent so surfaces are free of oil and other contaminants. After cleaning, apply a conversion coating suited to the organic coating to be applied over it. Clean welds, mechanical connections, and abraded areas, and apply galvanizing repair paint specified below to comply with ASTM A 780.

a. Galvanizing Repair Paint: High-zinc-dust-content paint for regalvanizing welds in steel, complying with SSPC-Paint 20.

3. Steel Surface Preparation: Clean surfaces to comply with SSPC-SP 1, "Solvent Cleaning"; remove dirt, oil, grease, or other contaminants that could impair paint bond. Remove mill scale and rust, if present, from uncoated steel; comply with SSPC-SP 3, "Power Tool Cleaning," or SSPC-SP *6/NACE* No.3, "Commercial Blast Cleaning."

4. Factory Priming for Field-Painted Finish: Apply shop primer specified below immediately after surface preparation and pretreatment. Apply a smooth coat of even consistency to provide a uniform dry film thickness of not less than 0.7 mils.

a. Shop Primer: Manufacturer's standard, fast-curing, lead- and chromate-free primer complying with ANSI A250.10 acceptance criteria; recommended by primer manufacturer for substrate; compatible with substrate and field-applied finish paint system indicated; and providing a sound foundation for field-applied topcoats despite prolonged exposure.

Part 3 - Execution

3.01 Fabrication:

A. All doors, and frames shall be cleaned of rust, grease and other impurities, and all welds ground and filled smooth, Metallic filler to conceal defects is not acceptable.

B. Doors and frames shall be mortised, reinforced, drilled, and tapped for all mortise hardware in accordance with Hardware schedule and templates furnished by the hardware supplier, except that drilling and tapping for surface door closers, door closer brackets, surface panic devices and/or other surface applied hardware shall be done in the field. Frames shall be accurate and done in a neat, workmanlike manner.

3.02 Installation:

A. Standard Steel Frames: Install standard steel frames for doors sidelights borrowed lights and other openings, of size and profile indicated. Comply with SDI 105.

1. Bituminous coating and grout: Any material lost, removed or damaged during transportation or installation shall be replaced.

2. Set frames accurately in position; plumbed, aligned, and braced securely until permanent anchors are set. After wall construction is complete, remove temporary

braces, leaving surfaces smooth and undamaged.

a. At fire-protection-rated openings, install frames according to NFP A 80.
b. Install frames with removable glazing stops located on secure side of opening.
c. Install door silencers in frames before grouting.
d. Remove temporary braces necessary for installation only after frames have been properly set and secured.
e. Check plumb, squareness, and twist of frames as walls are constructed. Shim as necessary to comply with installation tolerances.

3. Floor Anchors: Provide floor anchors for each jamb and mullion that extends to floor and secure with post-installed expansion anchors.
   a. Floor anchors may be set with powder-actuated fasteners instead of post installed expansion anchors if so indicated and approved on Shop Drawings.
4. Metal-Stud Partitions: Solidly pack mineral-fiber insulation behind frames.
5. Masonry Walls: Coordinate installation of frames to allow for solidly filling space between frames and masonry with mortar as specified in Division 4 Section "Unit Masonry Assemblies."
6. Ceiling Struts: Extend struts vertically from top of frame at each jamb to supporting construction above, unless frame is anchored to masonry or to other structural support at each jamb. Bend top of struts to provide flush contact for securing to supporting construction above. Provide adjustable wedged or bolted anchorage to frame jamb members.
7. Installation Tolerances: Adjust standard steel door frames for squareness, alignment, twist, and plumb to the following tolerances:
   a. Squareness: Plus or minus 1/16 inch, measured at door rabbet on a line 90 degrees from jamb perpendicular to frame head.
   b. Alignment: Plus or minus 1/16 inch, measured at jambs on a horizontal line parallel to plane of wall.
   c. Twist: Plus or minus 1/16 inch, measured at opposite face corners of jambs on parallel lines, and perpendicular to plane of wall.
   d. Plumbness: Plus or minus 1/16 inch, measured at jambs at floor.

B. Standard Steel Doors: Fit hollow-metal doors accurately in frames, within clearances specified below. Shim as necessary.
   1. Non-Fire-Rated Standard Steel Doors:
      a. Jambs and Head: 1/8 inch plus or minus 1/16 inch.
      b. Between Edges of Pairs of Doors: 1/8 inch plus or minus 1/16 inch.
      c. Between Bottom of Door and Top of Threshold: Maximum 3/8 inch.
      d. Between Bottom of Door and Top of Finish Floor (No Threshold): Maximum ¾ inch.
   2. Fire-Rated Doors: Install doors with clearances according to NFP A 80.
   3. Smoke-Control Doors: Install doors according to NFPA 105.

C. Glazing: Comply with installation requirements in Division 8 Section "Glazing" and with standard steel door and frame manufacturer's written instructions.

3.03 Adjusting and Cleaning:

A. Final Adjustments: Check and readjust operating hardware items immediately before final inspection. Leave work in complete and proper operating condition. Remove and replace defective work, including standard steel doors or frames that are warped, bowed, or otherwise unacceptable.

B. Clean grout and other bonding material off standard steel doors and frames immediately after installation.

C. Prime-Coat Touchup: Immediately after erection, sand smooth rusted or damaged areas of prime coat and apply touchup of compatible air-drying primer.

D. Galvannealed Surfaces: Clean abraded areas and repair with galvanizing repair paint according to manufacturer's written instructions. Do not use abrasive, caustic or acid cleaning agents.

E. Protect doors and frames from damage until final acceptance by Architect. Replace/repair any damaged items as directed above.

End of Section

SECTION 08200 - WOOD DOORS

Part 1 - General

1.01 Work Included:
- A. All materials, labor, services and incidentals necessary for the completion of this section of the work.

1.02 Related Work Specified Elsewhere:
- A. Finish Hardware - Section 08700

1.03 Quality Assurance:
- A. Standards:
  1. Architectural Woodwork Institute:
     a. Architectural Woodwork Quality Standards
  2. Underwriter's Laboratories, Inc.
- B. Manufacturer Qualifications: A qualified manufacturer that is certified for chain of custody by an FSC-Accredited certification body.
- C. Source Limitations: Obtain flush wood doors from single manufacturer.
- D. Quality Standard: In addition to requirements specified, comply with AWI's "Architectural Woodwork Quality Standards Illustrated."
- E. Fire-Rated Wood Doors: Doors complying with NFPA 80 that are listed and labeled by a qualified testing agency, for fire-protection ratings indicated, based on testing at according to NFPA 252 and UL 10B.
  1. Oversize Fire-Rated Door Assemblies: For units exceeding sizes of tested assemblies, provide certification by a qualified testing agency that doors comply with standard construction requirements for tested and labeled fire-rated door assemblies except for size.
  2. Temperature-Rise Limit: At vertical exit enclosures and exit passageways, provide doors that have a maximum transmitted temperature end point of not more than 450 deg F above ambient after 30 minutes of standard fire-test exposure.
  3. Fire-Rated Doors must be provided with fire labels.

1.04 Submittals:
- A. Shop Drawings:
  1. It is the manufacturer's responsibility to obtain templates of finish hardware. The shop Drawings must indicate all hardware applications to the doors.
  2. Begin fabrication only after receiving approved ship Drawings.
  3. Indicate location, size, and hand of each door; elevation of each kind of door; construction details not covered in Product Data; location and extent of hardware blocking; and other pertinent data.
  4. Samples for Initial Selection: Color charts consisting

of actual materials in small sections.

5. Samples for Verification:
   a. Factory finishes applied to actual door face materials, approximately 8 by 10 inches, for each material and finish. For each wood species and transparent finish, provide set of three samples showing typical range of color and grain to be expected in the finished work.
6. Frames for light openings, 6 inches long, for each material, type, and finish required.

1.05 Products Delivery, Storage and Handling:

A. When doors are delivered to job site, doors shall receive first coat of finish. Store in a protected area.
B. Comply with requirements of referenced standard and manufacturer's written instructions.
C. Package doors individually in cardboard cartons and wrap bundles of doors in plastic sheeting.
D. Mark each door on bottom rail with opening number used on Shop Drawings.

1.06 Warranty:

A. General Warranty: Door manufacturer's warranty specified in this Article shall not deprive the Owner of other rights the Owner may have under other provisions of the Contract Documents and shall be in addition to, and run concurrent with, other warranties made by the Contractor under requirements of the Contract Documents.
B. Door Manufacturer's Warranty: Submit written agreement on door manufacturer's standard form signed by manufacturer, Installer, and Contractor, agreeing to repair or replace defective doors that have warped (bow, cup, or twist) more than 1/4 inch in a 42-by-84-inch section or that show telegraphing of core construction in face veneers exceeding 0.01 inch in a 3-inch span, or do not comply with tolerance limitations in referenced quality standard.
   1. Warranty shall also include installation and finishing that may be required due to repair or replacement of defective doors.
   2. Warranty shall be in effect during the following period of time after date of Final Completion.
      a. Solid Core Interior Doors: Life of installation.

Part 2 - Products

2.01 Doors (non-labeled):

A. Doors shall be 1 3/4" thick interior grade, veneered, with a particleboard core. Construction shall meet AWI 1300 PC, "Custom" standard. Doors shall have I.S. "Premium" grade

faces - Plain Sliced Red Oak. Provide hardwood top, bottom, and side edges.

2.02 Doors (labeled):

A. Doors shall be 1 3/4" thick interior grade, veneered, with a mineral core (refer to Drawings for ratings. Construction shall meet AWI 1300 FD, "Custom" standard. Doors shall have I.S. "Premium grade faces - Plain Sliced Red Oak. Provide hardwood top, bottom, and side edges.

B. Where doors are called for on drawings as labeled their construction shall conform to all U.L. requirements and bear the appropriate U.L. label.

2.03 Acceptable Manufacturers: Subject to compliance with requirements, available manufacturers offering products that may be incorporated into the Work include, but are not limited to, the following:

1. Algoma Hardwoods, Inc.
2. Ampco, Inc.
3. Buell Door Company Inc.
4. Chappell Door Co.
5. Eagle Plywood & Door Manufacturing, Inc.
6. Eggers Industries.
7. Graham; an Assa Abloy Group company.
8. Haley Brothers, Inc.
9. Ideal Architectural Doors & Plywood.
10. Ipik Door Company.
11. Lambton Doors.
12. Marlite.
13. Marshfield Door Systems, Inc.
14. Mohawk Flush Doors, Inc.; a Masonite company.
15. Oshkosh Architectural Door Company.
16. Poncraft Door Company.
17. Vancouver Door Company.
18. VT Industries Inc.

2.04 Door Construction – General:

A. Particleboard-Core Doors:

1. Particleboard: ANSI A208.1, Grade 1L-1, made with binder containing no ureaformaldehyde resin.
2. Blocking - Provide wood blocking in particleboard-core doors as follows:
   a. 5-inch top-rail blocking, in doors indicated to have closers.
   b. 5-inch bottom-rail blocking, in exterior doors and doors indicated to have kick, mop, or armor plates.
3. Provide doors with structural-composite-lumber cores instead of particleboard cores for doors indicated to receive exit devices.

B. Fire-Protection-Rated Doors: Provide core specified or

mineral core as needed to provide fire protection rating indicated.

1. Edge Construction: Provide edge construction with intumescent seals concealed by outer stile. Comply with specified requirements for exposed edges.
2. Pairs: Provide fire-retardant stiles that are listed and labeled for applications indicated without formed-steel edges and astragals. Provide stiles with concealed intumescent seals. Comply with specified requirements for exposed edges.
3. Pairs: Provide formed-steel edges and astragals with intumescent seals.

C. Factory Finishing: Comply with referenced quality standard for factory finishing. Complete fabrication, including fitting doors for openings and machining for hardware that is not surface applied, before finishing.

1. Finish faces, all four edges, edges of cutouts, and mortises. Stains and fillers may be omitted on bottom edges, edges of cutouts, and mortises.
2. Finish doors at factory.
3. Finish doors at factory that are indicated to receive transparent finish. Field finish doors indicated to receive opaque finish.
4 Transparent Finish:
    1. Grade: Premium.
    2. Finish: WDMA TR-6 catalyzed polyurethane.
    3. Staining: Water-based stain with transparent ultraviolet cured catalyzed polyurethane. Color as selected by Architect from manufacturer's full range.
    4. Effect: Open-grain finish.
    5. Sheen: Semigloss.

Part 3 - Execution

3.01 Examination:

A. Examine doors and installed door frames before hanging doors.
    1. Verify that frames comply with indicated requirements for type, size, location, and swing characteristics and have been installed with level heads and plumb jambs.
    2. Reject doors with defects.
B. Proceed with installation only after unsatisfactory conditions have been corrected.

3.02 Installation:

A. Provide clean properly sized and accurately placed mortises

and drilled holes for all mortise and surface mounted finish hardware, in accordance with Hardware Schedule and templates furnished by the hardware supplier.

B. Comply with the tolerance requirements of AWI for prefitting. Install in accordance with the requirements of the NWMA Door Guarantee.

C. Repair or replace doors damaged during installation. Repair doors which do not swing or operate properly.

D. Hardware: For installation, see Division 08 Section "Door Hardware."

E. Installation Instructions: Install doors to comply with manufacturer's written instructions and the referenced quality standard, and as indicated.
   1. Install fire-rated doors in corresponding fire-rated frames according to NFPA 80.

F. Job-Fitted Doors: Align and fit doors in frames with uniform clearances and bevels as indicated below; do not trim stiles and rails in excess of limits set by manufacturer or permitted for fire-rated doors. Machine doors for hardware. Seal edges of doors, edges of cutouts, and mortises after fitting and machining.
   1. Clearances: Provide 1/8 inch at heads, jambs, and between pairs of doors. Provide l inch from bottom of door to top of decorative floor finish or covering unless otherwise indicated. Where threshold is shown or scheduled, provide 1/4 inch from bottom of door to top of threshold unless otherwise indicated.
      a. Comply with NFP A 80 for fire-rated doors.
   2. Bevel non-fire-rated doors 1/8 inch in 2 inches at lock and hinge edges.
   3. Bevel fire-rated doors 1/8 inch in 2 inches at lock edge; trim stiles and rails only to extent permitted by labeling agency.

G. Factory-Fitted Doors: Align in frames for uniform clearance at each edge.

H. Factory-Finished Doors: Restore finish before installation if fitting or machining is required at Project site.

3.03 Adjusting:

A. Operation: Rehang or replace doors that do not swing or operate freely.

B. Finished Doors: Replace doors that are damaged or that do not comply with requirements. Doors may be repaired or refinished if work complies with requirements and shows no evidence of repair or refinishing.

End of Section

DIVISION 8 - DOORS AND WINDOWS

SECTION 08400 - ENTRANCES AND STOREFRONTS

PART 1 - General

1.01 Work Included:
- A. All materials, labor, services, and incidentals necessary for the completion of all work as shown on the Drawings and specified herein.
- B. All necessary anchors and accessories required for the complete installation of the Storefront units.
- C. Perimeter Sealant.

1.02 Related Work Specified Elsewhere:
- A. Sealants - Section 07900.
- B. Hardware and Specialties - Section 08700.
- C. Glazing - Section 08800.

1.03 Performance And Testing Requirements:
- A. Provision for Thermal Movements:
  1. Storefront framing systems shall be designed to provide for thermal movement of all component materials resulting from a cycling temperature range of 180E F. without causing buckling, stresses on glass, failure of joint seals, undue stress on structural elements, damaging loads on fasteners, reduction of performance, or other detrimental effects. Operating windows and doors shall function normally over this temperature range.
- B. Test Procedures and Performance:
  1. Air Infiltration Test, Fixed Unit:
     a. Test Fixed Unit in accordance with ASTM E 283 at static air pressure difference of 6.24 psf.
     b. Air infiltration shall not exceed .06 cfm per square foot of fixed wall area.
  2. Air Infiltration Test, Doors:
     a. Test Doors in accordance with ASTM E 283 at static air pressure difference of 1.57 psf.
     b. Air infiltration shall not exceed .10 cfm per foot of perimeter crack length for pair of doors.
  3. Water Resistance Test:
     a. Test unit in accordance with ASTM E 331.
     b. There shall be no uncontrollable water leakage at a static test pressure of 6.24 psf. (12.00 psf at doors)
  4. Uniform Load Deflection Test:
     a. Test in accordance with ASTM E 330.
     b. Design and size members to withstand dead laods and live loads caused by pressure and suction of wind as calculated in accordance with 2009 International Building Code.

c. Deflection under design load shall not exceed L/175 of the clear span.

5. Uniform Load Structural Test:
   a. Test in accordance with ASTM 330 at a pressure 1.5 times the design wind pressure in 1.03.3.b.
   b. At conclusion of the test, there shall be no glass breakage, permanent damage to fasteners, storefront parts, or any other damage which would cause the storefront to be defective.
6. Condensation Resistance Test (CRF):
   a. Test unit in accordance with ASTM 1502.7.
   b. Condensation Resistance Factor (CRF) shall be not less than 70.
7. Thermal Transmittance Test (Conductive U Value):
   a. Test in accordance with ASTM 1503.1.
   b. Conductive thermal transmittance (U Value) shall be not more than .44 BTU/HR/degree F/sf. Unless otherwise specified, units tested for condensation resistance and thermal transmittance shall be glazed with no more than two lites of clear, uncoated, annealed glass. Sealed insulating glass shall be of standard construction.

1.04 Quality Assurance:

A. Provide test reports from AAMA accredited laboratories certifying the performance as specified in 1.05.

B. Test reports shall be accompanied by the storefront manufacturer=s letter of certification stating that the tested storefront meets or exceeds the referenced criteria for the appropriate storefront type.

1.05 Submittals:

A. Contractor shall submit shop drawings to the Architect for his approval. Drawings shall show scale elevations and sections. Full size sections shall be shown only when needed for clarity. Drawings shall show construction of all parts of the work, including metal and glass thickness, methods of joining, details of all field connections and anchorage, fastening and sealing methods, metal finishes and all pertinent information. Relationship to other work should be clearly indicated. No work shall be fabricated until shop drawings for that work have been finally approved for fabrication.

1.06 Delivery, Storage And Handling:

A. Deliver, handle, store and protect system components in accordance with manufacturer's instructions.

B. After erection, the Contractor shall adequately protect all

exposed portions of the grid framing metal work from damage by grinding and polishing machines, plaster, lime, acid, cement, or other harmful compounds.

C. Immediately prior to final acceptance of building, inspect all aluminum framing for weather tightness and make all necessary repairs and adjustment.

1.07 Warranties:

A. Total Storefront System

1. The responsible contractor shall assume full responsibility and warrant for one year the satisfactory performance of the total storefront installation. This includes the framing, glass (including insulated units), glazing, anchorage and setting system, sealing, flashing, etc. as it relates to air, water and structural adequacy as called for in the specifications and approved shop drawings. A manufacturer's material warranty shall be provided for a minimum of 5 years from substantial completion.
2. Any deficiencies due to such elements not meeting the specifications shall be corrected by the responsible contractor during the warranty period.

1.08 **Products of certain manufacturers are specified herein to simplify descriptions of design, construction, and/or materials only. Proprietary names are not intended to imply that products of named manufacturer are required to the exclusion of equivalent products of other manufacturers.**

PART 2 - PRODUCTS

2.01 Entrance and Storefront System:

A. EFCO Corporation S-403 Wall Thermal Storefront System, with Series D318 DuraStyle Medium Style aluminum entrance doors.

B. Kynar 500 – color to be selected by Architect from manufacturer's standard colors to match 2015 Gymnasium.

2.02 Material:

A. Aluminum:

1. Extruded aluminum shall be 6063-T5 or T6 alloy and temper.

B. Glass:

1. Glass for Fixed Units shall be according to Glazing Schedule.
   Glass for Entrance Doors shall be 1 inch insulated tempered glass units factory glazed.

C. Thermal Barrier:

1. The thermal barrier shall be internally connected and locked celcon insulator clips.

D. Dissimilar Metals:
   1. All dissimilar metals must be properly insulated to prevent galvanic action.

E. Fasteners:
   1. All exposed fasteners shall be aluminum or stainless steel.

2.03 Fabrication - Fixed Units:

A. General:
   1. All aluminum frame extrusions shall have a minimum wall thickness of .180 inches.
   2. All exposed work shall be carefully matched to produce continuity of line and design with all joints. System design shall be such that raw edges will not be visible at joints.

B. Frames - for 1" glazing:
   1. Depth of frame shall not be less than 4 inches.
   2. Face dimension shall not be less than 2 inches
   3. Covers shall connect to frame back members with internally connected and locked celcon insulator clips.
   4. Frame components shall be screw spline construction.

C. Glazing
   1. All units shall be Adry@ glazed with E. P. D. M. gasket on both exterior and interior.

2.04 Fabrication - Entrance Doors:

A. General:
   1. Major portions of the door sections shall have .188” wall thickness.
   2. Glazing stop sections shall have .050” wall thickness.

B. Entrance Doors:
   1. Door stiles shall be no less than 3 ½” wide (not including glass stops).
   2. Door stiles and rails shall have hairline joints at corners. Heavy concealed reinforcement brackets shall be secured with screws and shall be deep penetration and fillet welded.
   3. All doors shall have an adjusting mechanism in the top rail to provide for minor clearance adjustments.
   4. Weather-stripping shall be wool pile and shall be installed and shall be installed in one stile of pairs of doors and in jamb stiles of center pivoted doors.
   5. Door stops shall include wool pile weather-stripping.

C. Glazing:
   1. All units shall be dry glazed with extruded pressure fitting aluminum glazing stops, and E.P.D.M. gasket.

Glazing shall be as per Glazing Schedule, Sheet A601.

D. Door Frame:
   1. Depth of frame shall not be less than 4”.
   2. Face dimension shall not be less than 2”.
   3. Shear block construction shall be utilized through out. System design shall be such that raw edges will not be visible at joints.

2.05 Finish:
   A. Kynar 500 – color to be selected by Architect from manufacturer’s standard colors to match 2015 Gymnasium.

PART 3 EXECUTION

3.01 Inspection:
   A. Job Conditions:
      1. All openings shall be prepared to the proper size and shall be plumb, level and in the proper location and alignment as shown on the Drawings.

3.02 Installation:
   A. Use only skilled tradesmen with work done in accordance with approved shop drawings and specifications.
   B. Storefront system shall be erected plumb and true, in proper alignment and relation to established lines and grades.
   C. Entrance doors shall be securely anchored in place to a straight, plumb and level condition, without distortion. Weather-stripping contact and hardware movement shall be checked and final adjustment made for proper operation and performance of units.
   D. Furnish and apply sealing materials to provide a weather tight installation at all joints and intersections and at opening perimeters.
   E. Sealing materials specified shall be used in strict accordance with the manufacturer>s printed instructions and shall be applied only by mechanics specially trained of experienced in their use. All surfaces must be clean and free of foreign matter before applying sealing materials. Sealing compounds shall be tooled to fill the joint and provide a smooth finished surface.

3.03 Anchorage:
   A. Adequately anchor to maintain positions permanently when subjected to normal thermal movement, specified building movement, and specified wind loads.

3.04 Protection and Cleaning:

A. The general contractor shall protect the aluminum materials and finish against damage from construction activities and harmful substances. The contractor shall remove any protective coatings as directed by the Architect and shall clean the aluminum surfaces as recommended for the type of finish applied.

End of Section

SECTION 08700 - FINISH HARDWARE

Part 1 - General

1.01 Work Included:
- A. All materials, labor services and incidentals necessary for the completion of this section of the work.

1.02 Related Work Specified Elsewhere:
- A. Finish Carpentry - Section 06200
- B. Custom Casework - Section 06410
- C. Metal Doors and Frames - Section 08100
- D. Wood Doors - Section 08200

1.03 Quality Assurance:
- A. This material shall be procured from a source of supply approved by the Architect as having a member of their firm registered by the American Society of Contracting Architectural Hardware Consultants, and with a proven record of several years of satisfactory experience in contract builder's hardware, both in furnishing material and properly servicing jobs. The supplier also must be an established contract builder's hardware firm who meets all the above requirements, and who maintains and operates an office, display room and stock.

1.04 Submittals:
- A. Prepare a complete schedule including all items processed for each opening and other miscellaneous items and submit four copies to the Architect for approval within 30 days submitted within that time, the supplier shall furnish the hardware specified by catalog number.
- B. Indicate on schedule name of manufacturer after each item.
- C. Upon receiving the approved schedule, the hardware supplier shall immediately forward a copy to the metal frame suppliers, when applicable; and as soon as they receive approved shop drawings, they will immediately forward a complete set to the hardware supplier who can then check the applications and make any necessary minor revisions. If revisions are necessary, notify Architect immediately.
- D. Mark each item of hardware for opening on which it is to be used and deliver a complete schedule to the contractor when hardware is delivered.

1.05 Schedule:
- A. This specification describes the quality, character and function that is required of items of hardware; however, it is not intended to mention each particular item.
- B. It is the responsibility of the supplier to thoroughly detail the entire project to assure that the items specified will properly function in the indicated locations.
- C. Quantities shall be determined by the bidder. Part 2, following, indicates the type and function of material applicable to the typical opening. Should an unlisted opening require different type of function of hardware than that specified, for similar opening, notify the Architect, and provide hardware for unlisted openings within the bid.

Part 2 - Products

2.01 Finish Hardware:

A. Standards of Quality:

1. Codes, specifications and published recommendations, latest editions of the following are hereby made part of this section of the specifications in so far as they apply to the material or work called for.
   a. National Builders Hardware Association (NBHA)
   b. American Society for Testing Materials (ASTM)
   c. Underwriters Laboratories (UL)
   d. National Fire Protection Association (NFPA)
   e. Code of Ethics of ASAHC & NBHA
   f. Federal Emergency Management Agency (FEMA)
2. Federal Specification, (ANSI Specifications):
   a. Hinges: FF-H-116C (ANSI A156.1)
   b. Locks and Door Trim: FF-H-106A (ANSI A 156.2)
   c. Auxiliary Locks: FF-H-106A (ANSI A 156.5)
   d. Exit Devices: FF-H-106A, FF-H-111B, FF-L486 (ANSI A156.3).
   e. Door Closers: FF-H-121C (ANSI A 156.4)
   f. Shelf and Miscellaneous Hardware: FF-H-00116 (ANSI A156.6).
   g. All Door hardware: Comply with ADAAG where applicable.

B. General:

1. All hardware relating to hollow metal doors and frames shall be to standard templates of each respective hardware manufacturer for items furnished.
   a. The related suppliers such as hollow metal doors and frames and such others as may be required will furnish the hardware supplier one copy of each of their approved shop drawings for proper coordination of their work and the finish hardware.

C. Manufacturers and Requirements:

1. Hardware manufacturers and brand names are for a guide as to type and standard required and all such hardware furnished must meet these standards as far as quality, weight, finish and design.

D. Keying:

1. All locks and cylinders to be masterkeyed as directed by the Architect/Owner.
2. Keys: Furnish the following keys:
   a. 2 change keys each lock or cylinder
   b. 6 masterkeys
   c. all EXTERIOR locks and cylinders shall be Primus Schlage Key System and keyed to Owner's Primus Master Key system. All remaining interior locks and cylinders shall be Classic Schlage and keyed to the Owner's Primus Master Key System.

SECTION 08700 - FINISH HARDWARE

2.02 Hardware Sets:

Hardware Group No. 001: Provide each PR door(s) with the following:

Quantity		Description	Model Number	Finish	Mfr
2	EA	PIVOT SET	7215	626	IVE
2	EA	PIVOT	7215 INT	626	IVE
1	EA	MULLION	KR4954 HEIGHT AS REQUIRED	689	VON
1	EA	PANIC HARDWARE	QEL99EO LENGTH AS REQUIRED	626	VON
1	EA	PANIC HARDWARE	CD99NL-OP LENGTH AS REQUIRED	626	VON
1	EA	RIM CYLINDER	20-057 ICX	626	SCH
3	EA	MORTISE CYLINDER	20-061 ICX	626	SCH
4	EA	PRIMUS CORE ONLY	20-740	626	SCH
2	EA	OFFSET DOOR PULL	8190-0-O	630	IVE
2	EA	SURFACE CLOSER	4041 SCUSH MTG BRKTS, SPCRS & PLATES AS REQ	689	LCN
2	EA	DOOR SWEEP	C627A LENGTH AS REQUIRED	AL	NGP
1	EA	THRESHOLD	896V LENGTH AS REQUIRED	AL	NGP
1	MEETING STYLE SEAL BY DOOR MANUFACTURER				
1	PERIMETER SEAL BY DOOR MANUFACTURER				
	REFER TO ELECTRICAL FOR ACCESS, CARD READER, ETC. INFORMATION.				

Hardware Group No. 002: Provide each PR door(s) with the following:

Quantity		Description	Model Number	Finish	Mfr
2	EA	PIVOT SET	7215	626	IVE
2	EA	PIVOT	7215 INT	626	IVE
1	EA	MULLION	KR4954 HEIGHT AS REQUIRED	689	VON
1	EA	PANIC HARDWARE	QEL99EO LENGTH AS REQUIRED	626	VON
1	EA	PANIC HARDWARE	CD99NL-OP LENGTH AS REQUIRED	626	VON
1	EA	RIM CYLINDER	20-057 ICX	626	SCH
3	EA	MORTISE CYLINDER	20-061 ICX	626	SCH
4	EA	PRIMUS CORE ONLY	20-740	626	SCH
2	EA	OFFSET DOOR PULL	8190-0-O	630	IVE
2	EA	SURFACE CLOSER	4041 SCUSH MTG BRKTS, SPCRS & PLATES AS REQ	689	LCN
1	MEETING STYLE SEAL BY DOOR MANUFACTURER				
1	PERIMETER SEAL BY DOOR MANUFACTURER				
	REFER TO ELECTRICAL FOR ACCESS, CARD READER, ETC. INFORMATION.				

SECTION 08700 - FINISH HARDWARE

Hardware Group No. 003: Provide each SGL door(s) with the following:

Quantity		Description	Model Number	Finish	Mfr
3	EA	HINGE	5BB1 4.5 X 4.5	652	IVE
1	EA	STOREROOM LOCK	L9080T 03N	626	SCH
1	EA	CLASSIC CORE	30-001	626	SCH
1	EA	SURFACE CLOSER	4041 OR P4041 MTG BRKTS, SPCRS & PLATES AS REQ	689	LCN
1	EA	KICK PLATE	8400 10" X 2" LDW	630	IVE
1	EA	STOP	WS407CCV OR FS436 AS REQUIRED	628	IVE
1	SET	SEALS	5050BR H & J (USE SILENCERS @ NON-RATED DOORS)	CLR	NGP

Hardware Group No. 004: Provide each SGL door with the following:

Quantity		Description	Model Number	Finish	Mfr
3	EA	HINGE	5BB1 4.5 X 4.5	652	IVE
1	EA	PASSAGE SET	L9010T 03N	626	SCH
1	EA	KICK PLATE	8400 10" X 2" LDW	630	IVE
1	EA	STOP	WS407CCV OR FS436 AS REQUIRED	628	IVE
3	EA	SILENCER	SR64	GRY	IVE

Hardware Group No. 005: Provide each SGL door with the following:

Quantity		Description	Model Number	Finish	Mfr
3	EA	HINGE	5BB1 4.5 X 4.5	652	IVE
1	EA	STOREROOM LOCK	L9466T 03N	626	SCH
1	EA	CLASSIC CORE	30-001	626	SCH
1	EA	STOP	WS407CCV OR FS436 AS REQUIRED	628	IVE
1	SET	SEALS	5050BR H & J (USE SILENCERS @ NON-RATED DOORS)	CLR	NGP

Hardware Group No. 006: Provide each SGL door set in the same frame with the following:

Quantity		Description	Model Number	Finish	Mfr
3	EA	HINGE	5BB1HW 4.5 X 4.5	652	IVE
1	EA	FIRE EXIT HARDWARE	99L-F-BE 996L-BE-03 LENGTH AS REQUIRED	626	VON
1	EA	SURFACE CLOSER	4041 OR P4041 MTG BRKTS, SPCRS & PLATES AS REQ	689	LCN
1	EA	KICKPLATE	8400 10" X 2" LDW	630	IVE
1	EA	OVERHEAD STOP	900S SERIES X SIZE & MOUNTING AS REQ	630	GLY
1	SET	SEALS	5050B H & J	BLK	NGP

SECTION 08700 - FINISH HARDWARE

Hardware Group No. 007: Provide each PR door(s) with the following:

Quantity		Description	Model Number	Finish	Mfr
6	EA	HINGE	5BB1HW 4.5 X 4.5	652	IVE
1	SET	AUTO FLUSH BOLT	FB31P OR FB41P AS REQUIRED	630	IVE
1	EA	COORDINATOR	COR X FL X MTG BRKTS X HW PREPS X LENGTH AS REQ	628	IVE
1	SET	ASTRAGAL	9605A HEIGHT AS REQ	AL	NGP
2	EA	FIRE EXIT HARDWARE	99L-BE-F 996L-14 499F LENGTH AS REQ'D	626	VON
2	EA	SURFACE CLOSER	4041 OR P4041 MTG BRKTS, SPCRS & PLATES AS REQ	689	LCN
2	EA	KICK PLATE	8400 10" X 2" LDW	630	IVE
2	EA	STOP	WS407CCV OR FS436 AS REQ	628	IVE
1	SET	SEALS	5050B H & J	BLK	NGP
2	EA	MAGNETIC HOLD OPEN DEVICES	SEM 7800 AL x VOLTAGE & TRANSFORMER REQ'D	AL	LCN

Provide ALL connections required to the fire alarm and electrical systems necessary for a fully functioning device meeting all applicable codes.

Hardware Group No. 008: Provide each SGL door(s) with the following:

Quantity		Description	Model Number	Finish	Mfr
3	EA	HINGE	5BB1HW 4.5 X 4.5	652	IVE
1	EA	CLASSROOM LOCK	L9070T 03N	626	SCH
1	EA	CLASSIC CORE	30-001	626	SCH
1	EA	SURFACE CLOSER	4041H OR P4041H MTG BRKTS, SPCRS & PLATES AS REQ	689	LCN
1	EA	KICK PLATE	8400 10" X 1" LDW	630	IVE
1	EA	STOP	WS407CCV OR FS436 AS REQUIRED	628	IVE
1	SET	SILENCER	SR64	GRY	IVE

Hardware Group No. 009: Provide each SGL door(s) with the following:

Quantity		Description	Model Number	Finish	Mfr
3	EA	HINGE	5BB1HW 4.5 X 4.5	652	IVE
1	EA	PUSH PLATE	8200 4" X 16"	630	IVE
1	EA	PULL PLATE W/ PULL	8303EZ-0 4" X 16"	630	IVE
1	EA	SURFACE CLOSER	4041H OR P4041H MTG BRKTS, SPCRS & PLATES AS REQ	689	LCN
1	EA	KICK PLATE	8400 10" X 1" LDW	630	IVE
1	EA	STOP	WS407CCV OR FS436 AS REQUIRED	628	IVE
1	EA	SILENCER	SR64	GRY	IVE

SECTION 08700 - FINISH HARDWARE

Hardware Group No. 010: Provide each SGL door(s) with the following:

Quantity		Description	Model Number	Finish	Mfr
3	EA	HINGE	5BB1 4.5 X 4.5	652	IVE
1	EA	OFFICE LOCK	L9050T 03N	626	SCH
1	EA	CLASSIC CORE	30-001	626	SCH
1	EA	STOP	WS407CCV OR FS436 AS REQUIRED	628	IVE
3	EA	SILENCER	SR64	GRY	IVE

Hardware Group No. 011: Provide each SGL door(s) with the following:

Quantity		Description	Model Number	Finish	Mfr
3	EA	HINGE	5BB1 4.5 X 4.5	652	IVE
1	EA	PRIVACY SET	L9444 03N	626	SCH
1	EA	STOP	WS407CCV OR FS436 AS REQUIRED	628	IVE
3	EA	SILENCER	SR64	GRY	IVE

Hardware Group No. 012: Provide each PR door(s) with the following:

Quantity		Description	Model Number	Finish	Mfr
2	EA	CONTINUOUS HINGE	224HD HEIGHT AS REQ	628	IVE
1	EA	MULLION	KR4954 HEIGHT AS REQ	689	VON
1	EA	PANIC HARDWARE	CD99EO LENGTH AS REQUIRED	626	VON
1	EA	PANIC HARDWARE	CD99NL-OP LENGTH AS REQUIRED	626	VON
1	EA	RIM CYLINDER	20-057 ICX	626	SCH
3	EA	MORTISE CYLINDER	20-061 ICX	626	SCH
4	EA	PRIMUS CORE ONLY	20-740	626	SCH
2	EA	SURFACE CLOSER	4040XP SHCUSH MTG BKTS, SPCRS & PLATES AS REQ	689	LCN
2	EA	OFFSET DOOR PULL	8190-0-O	630	IVE
2	EA	KICK PLATE	8400 10" X 2" LDW	630	IVE
1	SET	SEALS	700SA H & J (INSTALL PRIOR TO OTHER HARDWARE)	AL	NGP
2	EA	DOOR SWEEP	C627A LENGTH AS REQ	AL	NGP
1	EA	OVERHEAD RAIN DRIP	16A DW + 4"	AL	NGP
1	EA	THRESHOLD	896V LENGTH AS REQ	AL	NGP

REFER TO ELECTRICAL FOR ACCESS, CARD READER, ETC. INFORMATION, ETC.

Hardware Group No. 013: Provide each SGL door(s) with the following:

Quantity		Description	Model Number	Finish	Mfr
3	EA	HINGE	5BB1 4.5 X 4.5	652	IVE
1	EA	OFFICE LOCK	L9050T 03N	626	SCH
1	EA	CLASSIC CORE	30-001	626	SCH
1	EA	STOP	WS407CCV OR FS436 AS REQUIRED	628	IVE
3	EA	SILENCER	SR64	GRY	IVE
1	EA	SURFACE CLOSER	4041 OR P4041 MTG BRKTS, SPCRS & PLATES AS REQ	689	LCN

AT DOOR #O6 - REFER TO ELECTRICAL FOR ACCESS, CARD READER, ETC. INFORMATION.

SECTION 08700 - FINISH HARDWARE

Hardware Group No. 014: Provide each SGL door(s) with the following:

Quantity		Description	Model Number	Finish	Mfr
1	EA	PIVOT SET	7215	626	IVE
1	EA	PIVOT	7215 INT	626	IVE
1	EA	PANIC HARDWARE	QEL99EO LENGTH AS REQUIRED	626	VON
1	EA	RIM CYLINDER	20-057 ICX	626	SCH
2	EA	MORTISE CYLINDER	20-061 ICX	626	SCH
2	EA	PRIMUS CORE ONLY	20-740	626	SCH
1	EA	OFFSET DOOR PULL	8190-0-O	630	IVE
1	EA	SURFACE CLOSER	4041 SCUSH MTG BRKTS, SPCRS & PLATES AS REQ	689	LCN
1	MEETING STYLE SEAL BY DOOR MANUFACTURER				
1	PERIMETER SEAL BY DOOR MANUFACTURER				
	REFER TO ELECTRICAL FOR ACCESS, CARD READER, ETC. INFORMATION.				

The following list of products and manufactures are acceptable for this project.

Product	Manufacture and Approved Equals
1. Hinges	A. Ives B. Hager C. Bommer
2. Continuous Hinges	A. Pemko B. Roton C. Select
3. Key System	A. **Schlage (No substitutions)**
4. Lock/Latch	A. **Schlage (No substitutions)**
5. Closers	A. **LCN (No substitutions)**
6. Exit Devices	A. **Von Duprin (No substitutions)**
7. Push/Pull/Plates	A. Ives B. Rockwood C. Trimco
8. Misc. Stop, Bolts, etc.	A. Ives B. Glynn-Johnson C. Rockwood
9. Door Seal/Thresholds	A. National Guard B. Pemko C. Reese

SECTION 08700 - FINISH HARDWARE

Each Product, by category, shall be the product of one manufacturer. Complete lockset, including keyed lock cylinder, shall be the product of one manufacturer unless noted otherwise.

Part 3 - Execution

3.01 Installation:

A. Install all finish hardware in strict accordance with the manufacturer's recommendations and printed instructions. Wherever cutting and fitting is required to install hardware onto or into surfaces which are later to be painted or finished in another way, install each item completely and then remove and store in a secure place during the finish application. After completion of the finishes, reinstall each item. Do not install surface mounted items until finishes have been completed on the substrate.

B. All hardware relating to hollow metal and aluminum doors and frames shall be to standard templates of each respective hardware manufacturer for items furnished.

C. Mounting Heights: Mount Hardware units at heights recommended by the National Builders Hardware Association, except as specifically indicated or required to comply with governing regulations, or as may be otherwise directed by the Architect.

3.02 Prior to the Final Inspection:

A. The supplier shall check all closers for proper operation after they have been installed and adjusted by the Contractor. He shall verify the keying to ensure proper location of locksets and shall assist the Contractor in correcting faulty operation of any locks.

B. Within 30 days after the acceptance of the entire project, the Contractor shall be responsible for this supplier meeting with the maintenance custodian at the job site for the purpose of instructing him thoroughly in the proper repair and adjustment of all finish hardware items, and items, and shall present to the custodian a full complement of tools to be used.

End of Section

DIVISION 8 - DOORS AND WINDOWS

SECTION 08800 - GLAZING

Part 1 - General

1.01 Work Included:
- A. The General Conditions and applicable sections of Division 1 shall apply to this entire section.
- B. All materials, labor, services and incidentals necessary for the completion of this section of the work.

1.02 Quality Assurance:
- A. Standards:
  - 1. Federal Specifications
    - a. DD-G-451d, Glass, Plate, Sheet (for glazing and other uses).
  - 2. Flat Glass Jobber Association: Glazing Manual.
- B. Comply with UBC 2406, and ANSI 97.1 with testing requirements of 16 CFR 1201, Cat II.

1.03 **Products of certain manufacturers are specified herein to simplify descriptions of design, construction, and/or materials only. Proprietary names are not intended to imply that products of named manufacturer are required to the exclusion of equivalent products of other manufacturers.**

Part 2 - Products

2.01 Materials:
- A. Glass Types and Examples:
  - 1. 1/4" Tempered Glass:
    - a. Type example: 1/4" Clear Herculite - PPG.
  - 2. 1" Nominal Thickness Insulating Tempered Glass - 1/4" tinted glass @ exterior side and 1/4" 100 Low E glass @ interior side of **2**" air space - **both sides tempered.** Low Emissivity coating on 3rd glass surface from building exterior.
    - a. Type Example: Versalux Green 2000 Insulated with Low-E, Visteon (Ford). **Note: Color will be a factor in approval.**
  - **3.** Fire-Protection Rated Tempered Glazing Types:
    - a. 20-minute fire-rated glazing, monolithic ceramic glazing.
    - b. Provide safety glazing labeling.
    - c. Fire-Protection-Rated Glazing, General: listed and labeled by a testing agency acceptable to authority Having Jurisdiction, for fire-protection ratings indicated, based on testing according to NFPA 252 for door assemblies and NFPA 257 for window assemblies.
    - d. Fire-Protection-Rated Tempered Glass: 1/4 inch thick, fire protection rated tempered, complying

with testing requirements in 16 CPR 1201 for Category II materials:

e. Products: subject to compliance with requirements, available products that may be incorporated into the Work include but are not limited to, the following:
   1. TPG - Technical Glass Products, Fireglass 20.
   2. InterEdge, Inc., a subsidiary of AFG Industries, Inc.; PyroEdge 20.
   3. Safti First, SuperLite 20.

f. Vetrotech Saint-Gobain, SSG Pyroswiss.

4. Impact Resistant Glass:
   a. Type Example: 6mm clear Lexan 9034 polycarbonate transparent panels.

B. Glazing Compounds and Preformed Glaze Sealants: Suitable type as approved for the installation, in accordance with Glazing Materials section of the FGJA Glazing Manual.

C. Glazing Accessories: Provide miscellaneous materials such as cleaners, primers, setting blocks, spacers, filler rods, beads, etc., as required for complete installation.

Part 3 - Execution

3.01 Installation:

A. Glazing-General:
   1. Items to be glazed may be field-or shop-glazed, using glass of the quality and thickness specified or indicated. Preparation of surrounds and glazing, unless otherwise specified, shall be in conformance with the details and general conditions governing glazing in the FGMA Glazing Manual, beads or stops which are furnished with the items to be glazed shall be used to secure the glass in place.
   2. All glass shall be set with the waves parallel to the sill. Glass that has been misordered, i.e. with the width and height dimensions not properly correlated with the Drawing process in manufacturing, resulting in pronounced waviness at right angles to the sill, will be rejected.
   3. Install plastic glass edging strips where indicated. Joints shall be as tight and imperceptible as possible.

B. Breakage: Replace all glass broken during or after setting. Breakage due to accident or carelessness or other will be charged to trade at fault.

C. Inspection: Prior to final acceptance of project, inspect all work done under this section and make all necessary adjustments, repairs or replacements of defective work, and clean all glass surfaces.

D. Clean-up: Remove all glass cuttings, scraps, packaging and rubbish upon completion of the work.

End of Section

DIVISION 9 - FINISHES

SECTION 09120 - CEILING SUSPENSION SYSTEMS

Part 1 - General

1.01 Work Included:
- A. All materials, labor, services and incidentals necessary for the completion of this section of the work.

1.02 Related Work Specified Elsewhere:
- A. Gypsum Wallboard - Section 09250
- B. Acoustical Treatment - Section 09500

1.03 Quality Assurance:
- A. Standards:
  1. American Society for Testing and Materials
     - a. ASTM C-635, Metal Suspension Systems for Acoustical Tile and Lay-In-Panel Ceilings.
     - b. ASTM C-636, Recommended Practice of Installation of Metal Ceiling Suspension Systems for Acoustical Tile and Lay-In-Panels.
  2. All materials to comply with NFPA 101, 16-3.3.2, where applicable.
- B. Submittals:
  1. Provide submittals in the form of samples, and documentation, to the Architect for review.

1.04 **Products of certain manufacturers are specified herein to simplify descriptions of design, construction, and/or materials only. Proprietary names are not intended to imply that products of named manufacturer are required to the exclusion of equivalent products of other manufacturers.**

Part 2 - Products

2.01 Materials:
- A. Suspended Acoustical Ceiling - Exposed Grid: ASTM C-635, intermediate structural classification.
  1. Main Beams, Cross Tees and Concealed Members: .015 cold rolled zinc coated steel.
  2. Wall Angle: .020 cold rolled zinc coated steel.
  3. Special Members: Provide special shaped members as shown on the Drawings.
  4. Member Finish: Exposed surfaces shall be flat white low-gloss grid.
  5. Hanger Wire: No. 12 gauge cold drawn, annealed, galvanized.
  6. Accessories: Provide wall clips, hold-down clips (shall be removable without damage to boards; two each panels opposite sides), beam clamps leveling splines, hanger clips, splice plates), (keep to a minimum), for a complete installation.

7. Acceptable Manufacturer: 200 Snap-Grid System, Chicago Metallic Corporation

B. Suspended Gypsum Board Ceilings:
   1. Structural Channels: Cold-rolled, 16 gauge, galvanized steel.
   2. Furring Channels: Roll-formed, hat sections, 20 gauge.

Part 3 - Execution

3.01 General:
   A. Coordinate with electrical and mechanical contractors in placement of light fixtures, grilles, etc. to conform with ceiling pattern.
   B. Construct necessary scaffolding, adequate and safe, in accordance with applicable laws and ordinances. Maintain during this work and remove after completion.
   C. Provide thorough and competent foreman and skilled mechanics.

3.02 Installation:
   A. Suspended Acoustical Ceiling:
      1. Deflection of any component shall not exceed 1/360 of the span.
      2. Main tees shall be suspended on 48" centers by 12 gauge wire spaced not more than 48" o.c. along main tee.
      3. Cross tees shall be placed at 24" o.c. or as required by the Drawings.
      4. Install wall angles at intersection of suspended ceiling and all vertical surfaces. Miter corners where wall molding intersects.
      5. Install grid system and ceiling panels with faces in a plane.
      6. Provide intersection clips at intersection of all tees.
      7. Provide additional hangar wire at four corners of light fixtures.
      8. Provide additional hangar wires to insure proper placement and alignment of grid system.
      9. Prior to the final acceptance of the building, examine and adjust water level to be certain that all planes and lines are plumb, square and smooth. Replace all marked, marred or otherwise damaged materials.
   B. Suspended Gypsum Board Ceilings:
      1. Coordinate location of hangars with other work.
      2. Install ceiling framing independent of walls, columns and above ceiling work.
      3. Install ceiling framing system in accordance with manufacturer's recommendations.
      4. Reinforce openings in ceilings in accordance with

manufacturer's recommendations.

5. Laterally brace entire suspension system where required.

3.03 Clean-Up:

A. Completely remove from the job site, at the completion of the work, all cartons, packaging, etc., and all other scraps and waste caused by this trade.

End of Section

DIVISION 9 - FINISHES

SECTION 09250 - GYPSUM WALLBOARD

Part 1 - General

1.01 Work Included:
A. All materials, labor, services and incidentals necessary for the completion of this section of the work.

1.02 Quality Assurance:
A. Standards:
1. American Society for Testing and Materials:
a. ASTM C-36, Gypsum Wallboard
b. ASTM C-475, Joint Treatment for Gypsum Wallboard Construction.
B. Federal Specifications:
1. FS-SS-L-30D, Type III, Grade X, Class 1, Gypsum Wallboard.

1.03 Submittals:
A. Provide submittals in the form of samples, and documentation, to the Architect for review.

1.04 Product Delivery, Storage and Handling:
A. All materials shall be delivered to the job site with manufacturer's labels intact and stored in an enclosed shelter providing protection from damage and exposure to the elements.

Part 2 - Products

2.01 Gypsum Wallboard:
A. Type: Fire-rated, ASTM C-36.
B. Size: 5/8" thick x 48" wide x 96" or as required.
C. Edges: Tapered.
D. Location: All gypsum board.

2.02 Fasteners:
A. Screws: Self-drilling, self-tapping, bugle head, Type S.
B. Nails: Annular ring: GWB-54.

2.03 Joint Treatment Materials:
A. Joint Tape: Perforated Tape, ASTM C-475.
B. Joint Compound: ASTM C-475.

2.04 Accessories:
A. Metal Edge: Similar to United States Gypsum Trim No. 402.

Part 3 - Execution

3.01 Installation:
A. Apply gypsum board to horizontal surfaces first, then to vertical.
B. Install gypsum board parallel to studs at vertical surfaces.
C. To minimize joints, use panels of maximum practical lengths.
D. Position all ends and edges of gypsum board over nailing or fastening members. Fit ends and edges closely; do not force

together. Stagger end joints.

E. Cut ends, edges, scribe or make cutouts within field of panel in a workmanlike manner.

F. Install trim at all intersections of gypsum board and other surfaces. Provide corner bead at all vertical or horizontal corners.

G. Fasteners:

1. Drive fasteners in field of panel first, work toward ends and edges.
2. Perimeter fasteners shall be a least 3/8" from ends and edges.
3. Attach panels to wood framing members with specified nails spaced out 8" for ceiling, and 8" o.c. at ends and 12" o.c. at each support.
4. Drive nail head slightly below surface of panel in a uniform dimple without breaking face paper.
5. Screw fasteners shall be spaced 12" o.c. at each support in the field of the board and 8" o.c. at all edges and ends.
6. Screws shall be power-driven with an electric screwdriver and screw heads shall provide a slight depression below surface of panel without breaking face paper.

3.02 Joint Treatment:

A. Treat all exposed joints and trim with a three-coat approved system applied in strict accordance with manufacturer's recommendations.

3.03 Clean-Up:

A. Use all necessary care during execution of the Work of this Section to prevent undue scattering of drywall scraps and dust and to prevent tracking of joint and finishing compounds onto floor surfaces. On completion of each installation segment in a room or space, promptly pick up and remove from the working area all scraps, debris and surplus material.

End of Section

DIVISION 9 - FINISHES

SECTION 09300 - TILE

Part 1 - General

1.01 Work Included:
- A. All materials, labor services and incidentals necessary for the completion of this section of the work.

1.02 Quality Assurance:
- A. Standards:
  1. Tile Council of America:
     a. Handbook for Ceramic Tile Installation.
  2. American National Standards Institute:
     a. ANSI A108.6, Ceramic Tile installed with Epoxy Mortar.
     b. ANSI A108.4, Ceramic Tile installed water-resistant organic adhesive.
     c. ANSI A108.5, Ceramic Tile installed with latex Portland Cement.
     d. ANSI A118.4, Latex Portland Cement Mortar.
     e. ANSI A118.3, Epoxy Mortar and Grout.
     f. ANSI A136.1, Type 1 Organic Adhesive.
     g. ANSI A137.1, Ceramic Tile.
  3. American Society for Testing and Materials:
     a. ASTM C-144, Aggregate.
     b. ASTM C-150, Portland Cement, Type 1.
     c. ASTM C-206, Special Finish Hydrated Lime.
- B. All materials shall meet IBC 2009, where applicable.
- C. Floor surfaces and elevation changes shall comply with ADAABAAG 302 and 303.
- D. Static Coefficient of Friction: For tile installed on walkway surfaces, provide products with the following values as determined by testing identical products per ASTM C 1028:
  1. Level Surfaces: Minimum.
  2. Step Treads: Minimum.
  3. Ramp Surfaces: Minimum.
- E. Source Limitations for Tile: Obtain tile of each type and color or finish from one source or producer.
  1. Obtain tile of each type and color or finish from same production run and of consistent quality in appearance and physical properties for each contiguous area.
- F. Source Limitations for Setting and Grouting Materials: Obtain ingredients of a uniform quality for each mortar, adhesive, and grout component from one manufacturer and each aggregate from one source or producer.
- G. Source Limitations for Other Products: Obtain each of the following products specified in this Section from a single manufacturer for each product:
  1. Stone thresholds.
  2. Joint sealants.

3. Cementitious backer units.
4. Metal edge strips.

1.03 Submittals:

A. Submit samples of all tile and grout specified under this section for approval and color selection prior to installation.
B. Submit a "Master Grade Certificate" bearing signatures of both manufacturer and contractor.
C. Submit tile manufacturer's maintenance guides for owner's use in maintaining all tile work specified in this section.
D. Shop Drawings: Show locations of each type of tile and tile pattern. Show widths, details, and locations of expansion, contraction, control, and isolation joints in tile substrates and finished tile surfaces.
F. Samples for Initial Selection: For each type of tile and grout indicated. Include Samples of accessories involving color selection.
G. Samples for Verification:
    1. Full-size units of each type and composition of tile and for each color and finish required.
    2. Assembled samples mounted on a rigid panel, with grouted joints, for each type and composition of tile and for each color and finish required. Make samples at least 24 inches square, but not fewer than 4 tiles. Use grout of type and in color or colors approved for completed Work.
    3. Full-size units of each type of trim and accessory for each color and finish required.
    4. Stone thresholds in 6-inch lengths.
    5. Metal edge strips in 6-inch lengths.
H. Qualification Data: For qualified Installer.
I. Master Grade Certificates: For each shipment, type, and composition of tile, signed by tile manufacturer and Installer.
J. Product Certificates: For each type of product, signed by product manufacturer.
    1. Material Test Reports: For each tile-setting and -grouting product and special purpose tile.

1.04 Product Delivery, Storage and Handling:

A. Deliver all materials to job site in manufacturer's unopened containers with grade seal unbroken and labels intact. Keep containers dry. Comply with requirements in ANSI A137.1 for labeling tile packages.
B. Store tile and cementitious materials on elevated platforms, under cover, and in a dry location.
C. Store aggregates where grading and other required characteristics can be maintained and contamination can be

avoided.

D. Store liquid materials in unopened containers and protected from freezing.

E. Handle tile that has temporary protective coating on exposed surfaces to prevent coated surfaces from contacting backs or edges of other units. If coating does contact bonding surfaces of tile, remove coating from bonding surfaces before setting tile.

1.05 Project Conditions:

A. Environmental Limitations: Do not install tile until construction in spaces is complete and ambient temperature and humidity conditions are maintained at the levels indicated in referenced standards and manufacturer's written instructions.

1.05 **Products of certain manufacturers are specified herein to simplify descriptions of design, construction, and/or materials only. Proprietary names are not intended to imply that products of named manufacturer are required to the exclusion of equivalent products of other manufacturers.**

Part 2 - Products

2.01 General:

A. All tile shall be standard grades conforming to ANSI 137.1

B. Both glazed and unglazed ceramic tile shall be manufactured by the same manufacturer.

C. Refer to Color Schedule for tile color. Colors will a determining factor in tile approval.

D. ANSI Standards for Tile Installation Materials: Provide materials complying with ANSI AlOS.02, ANSI standards referenced in other Part 2 articles, ANSI standards referenced by TCA installation methods specified in tile installation schedules, and other requirements specified.

E. Mounting: For factory-mounted tile, provide back- or edge-mounted tile assemblies as standard with manufacturer unless otherwise indicated.

F. Factory-Applied Temporary Protective Coating: Where indicated under tile type, protect exposed surfaces of tile against adherence of mortar and grout by precoating with continuous film of petroleum paraffin wax, applied hot. Do not coat unexposed tile surfaces.

G. Manufacturers: Subject to compliance with requirements, provide products by one of the following:

1. American Olean; Division of Dal-Tile International Inc.
2. Crossville, Inc.
3. Daltile; Division of Dal-Tile International Inc.

2.02 Ceramic Tile:

A. Wall Tile and Floor Tile:
   1. Type: Polished porcelain at walls and unpolished porcelain at floors.
   2. Nominal Face Size: 12” x 24” – orient as per Drawings.
   3. Edge: All-purpose cushion.
   4. Acceptable Manufacturer: American Olean – Ultra Modern.

B. Trim Shapes and Bases:
   1. Type: Same as floor tile.
   2. Includes bases, caps, stops, returns, trimmers and other shapes to finish installation.
      a. Cove Base for Thin-Set Mortar Installations: Straight, module size 6 by 12 inches.
      b. External Corners for Portland Cement Mortar Installations: radius stainless steel metal trim pieces at all outside corners.
      c. External Corners for Thin-Set Mortar Installations: radius stainless steel metal trim pieces at all outside corners.
      d. Internal Corners: Field-butted square corners. For coved base and cap use angle pieces designed to fit with stretcher shapes.

C. Setting Materials:
   1. Epoxy Mortar: ANSI A118.3
   2. Organic Adhesive: ANSI A136.1
   3. Latex Portland Cement Mortar: ANSI A118.4
   4. Manufacturers: Subject to compliance with requirements, available manufacturers offering products that may be incorporated into the Work include, but are not limited to, the following:
      a. Boiardi Products; a QEP company.
      b. Bonsai American; an Oldcastle company.
      c. Bostik, Inc.
      d. C-Cure.
      e. Custom Building Products.
      f. Jamo Inc.
      g. Laticrete International, Inc.
      h. MAPEl Corporation.
      i. Southern Grouts & Mortars, Inc.
      j. Summitville Tiles, Inc.
      k. TEC; a subsidiary of H. B. Fuller Company.

D. Grouting Materials:
   1. Floor Tile: Epoxy Grout.
   2. Wall Tile: Portland Cement Type.
   3. Manufacturers: Subject to compliance with requirements,

available manufacturers offering products that may be incorporated into the Work include, but are not limited to, the following:
a. Boiardi Products; a QEP company.
b. BonsaI American; an Oldcastle company.
c. Bostik, Inc.
d. C-Cure.
e. Custom Building Products.
f. Jamo Inc.
g. Laticrete International, Inc.
h. MAPEl Corporation.
i. Southern Grouts & Mortars, Inc.
j. Summitville Tiles, Inc.
k. TEC; a subsidiary of H. B. Fuller Company.

E. Granite Thresholds:
1. Type: Polished granite.
2. Size: 1 1/4" wide x 1/2" high, double-beveled.
3. Location: Provide marble threshold at centerline of doors at transition between ceramic tile flooring and carpet tile / exposed concrete.

F. Accessories: Provide vitreous china accessories of type and size indicated, suitable for installing by same method as adjoining wall tile.
1. Color and Finish: Match adjoining glazed wall tile.

G. Elastomeric Sealants:
1. General: Provide sealants, primers, backer rods, and other sealant accessories that comply with the following requirements and with the applicable requirements in Division 07 Section "Joint Sealants."
a. Use sealants that have a VOC content of 250 gIL or less when calculated according to 40 CPR 59, Subpart D (EPA Method 24).
b. Use primers, backer rods, and sealant accessories recommended by sealant manufacturer.
2. Colors: Provide colors of exposed sealants to match colors of grout in tile adjoining sealed joints unless otherwise indicated.
3. One-Part, Mildew-Resistant Silicone Sealant: ASTM C 920; Type S; Grade NS; Class 25;
Uses NT, G, A, and, as applicable to nonporous joint substrates indicated, 0; formulated with fungicide, intended for sealing interior ceramic tile joints and other nonporous substrates that are subject to in-service exposures of high humidity and extreme temperatures.
a. Products: Subject to compliance with requirements, available products that may be incorporated into the Work include, but are not limited to, the

following:
1. DAP Inc.; 100 percent Silicone Kitchen and Bath Sealant.
2. Dow Corning Corporation; Dow Corning 786.
3. GE Silicones; a division of GE Specialty Materials; Sanitary 1700.
4. Laticrete International, Inc.; Latasil Tile & Stone Sealant.
5. Pecora Corporation; Pecora 898 Sanitary Silicone Sealant.
6. Tremco Incorporated; Tremsil 600 White.

H. Miscellaneous Materials:
1. Trowelable Underlayments and Patching Compounds: Latex-modified, portland cement-based formulation provided or approved by manufacturer of tile-setting materials for installations indicated.
2. Metal Edge Strips: Angle or L-shape, height to match tile and setting-bed thickness, metallic or combination of metal and PVC or neoprene base, designed specifically for required applications; stainless-steel, ASTM A 666, 300 Series exposed-edge material.
3. Temporary Protective Coating: Either product indicated below that is formulated to protect exposed surfaces of tile against adherence of mortar and grout; compatible with tile, mortar, and grout products; and easily removable after grouting is completed without damaging grout or tile.
   a. Petroleum paraffin wax, fully refined and odorless, containing at least 0.5 percent oil with a melting point of 120 to 140 deg F per ASTM D 87.
   b. Grout release in form of manufacturer's standard proprietary liquid coating that is specially formulated and recommended for use as temporary protective coating for tile.
4. Tile Cleaner: A neutral cleaner capable of removing soil and residue without harming tile and grout surfaces, specifically approved for materials and installations indicated by tile and grout manufacturers.
5. Grout Sealer: Manufacturer's standard silicone product for sealing grout joints and that does not change color or appearance of grout.
   a. Products: Subject to compliance with requirements, available products that may be incorporated into the Work include, but are not limited to, the following:
      1. BonsaI American; an Oldcastle company; Grout Sealer.

2. Bostik, Inc.; CeramaSeal Grout & Tile Sealer.
3. C-Cure; Penetrating Sealer 978.
4. Custom Building Products; Grout Sealer.
5. Jamo Inc.; Penetrating Sealer.
6. MAPEl Corporation; KER 003, Silicone Spray Sealer for Cementitious Tile Grout and 004, Keraseal Penetrating Sealer for Unglazed Grout and Tile.
7. Southern Grouts & Mortars, Inc.; Silicone Grout Sealer.
8. Summitville Tiles, Inc.; SL-15, Invisible Seal Penetrating Grout and Tile Sealer.
9. TEC; a subsidiary of H. B. Fuller Company; TA-256 Penetrating Silicone Grout Sealer.

Part 3 - Execution

3.01 Examination:

A. Examine substrates, areas, and conditions where tile will be installed, with Installer present, for compliance with requirements for installation tolerances and other conditions affecting performance of installed tile.
   1. Verify that substrates for setting tile are firm, dry, clean, and free of coatings that are incompatible with tile-setting materials including curing compounds and other substances that contain soap, wax, oil, or silicone; and comply with flatness tolerances required by ANSI Al08.0 for installations indicated.
   2. Verify that concrete substrates for tile floors installed with adhesives or thin-set mortar comply with surface finish requirements in ANSI A108.01 for installations indicated.
      a. Verify that surfaces that received a steel trowel finish have been mechanically scarified.
      b. Verify that protrusions, bumps, and ridges have been removed by sanding or grinding.
   3. Verify that installation of grounds, anchors, recessed frames, electrical and mechanical units of work, and similar items located in or behind tile has been completed.
   4. Verify that joints and cracks in tile substrates are coordinated with tile joint locations; if not coordinated, adjust joint locations in consultation with Architect.

B. Proceed with installation only after unsatisfactory conditions have been corrected.

3.02 Preparation:

A. Fill cracks, holes, and depressions in concrete substrates

for tile floors installed with thin-set mortar with trowelable leveling and patching compound specifically recommended by tilesetting material manufacturer.

B. Where indicated, prepare substrates to receive waterproofing by applying a reinforced mortar bed that complies with ANSI AlOS.IA and is sloped 114 inch per foot toward drains.

C. Blending: For tile exhibiting color variations, verify that tile has been factory blended and packaged so tile units taken from one package show same range of colors as those taken from other packages and match approved Samples. If not factory blended, either return to manufacturer or blend tiles at Project site before installing.

D. Field-Applied Temporary Protective Coating: If indicated under tile type or needed to prevent grout from staining or adhering to exposed tile surfaces, precoat them with continuous film of temporary protective coating, taking care not to coat unexposed tile surfaces.

3.02 Installation:

A. All workmanship and materials shall conform in all respects to specifications and requirements and in accordance with the standard practice of the Tile Council of America.

B. All ceramic floor tile shall be installed using the following Tile Council of America specifications.

1. Floor Tile, TCA F131-2K (Concrete).

C. Provide all required trim shapes such as cove, bullnose, angles, etc., to module with field tile, unless otherwise noted on Drawings. All corners bullnosed.

D. Layout all tile work as to minimize cuts less than one-half tile in size. Align all joints to give straight uniform grout lines, plumb and level or parallel with walls. Strike all joints with a rounded, non-staining tool.

1. Extend tile work into recesses and under or behind equipment and fixtures to form complete covering without interruptions unless otherwise indicated. Terminate work neatly at obstructions, edges, and corners without disrupting pattern or joint alignments.

2. Accurately form intersections and returns. Perform cutting and drilling of tile without marring visible surfaces. Carefully grind cut edges of tile abutting trim, finish, or built-in items for straight aligned joints. Fit tile closely to electrical outlets, piping, fixtures, and other penetrations so plates, collars, or covers overlap tile.

3. Jointing Pattern: Lay tile in grid pattern unless otherwise indicated. Layout tile work and center tile fields in both directions in each space or on each wall area. Layout tile work to minimize the use of pieces

that are less than half of a tile. Provide uniform joint widths unless otherwise indicated.
   a. Where adjoining tiles on floor, base, walls, or trim are specified or indicated to be same size, align joints.
   b. Where tiles are specified or indicated to be whole integer multiples of adjoining tiles on floor, base, walls, or trim, align joints unless otherwise indicated.
4. Joint Widths: Unless otherwise indicated, install tile with the following joint widths:
   a. Wall Tile: 1/16 inch.
   b. Decorative Thin Wall Tile: 1/16 inch.
5. Layout tile wainscots to dimensions indicated or to next full tile beyond dimensions indicated.
6. Expansion Joints: Provide expansion joints and other sealant-filled joints, including control, contraction, and isolation joints, where indicated. Form joints during installation of setting materials, mortar beds, and tile. Do not saw-cut joints after installing tiles.
   a. Where joints occur in concrete substrates, locate joints in tile surfaces directly above them.
   b. Prepare joints and apply sealants to comply with requirements in Division 07 Section "Joint Sealants."
7. Stone Thresholds: Install stone thresholds in same type of setting bed as adjacent floor unless otherwise indicated.
   a. At locations where mortar bed (thickset) would otherwise be exposed above adjacent floor finishes, set thresholds in latex-portland cement mortar (thin set).
   b. Do not extend cleavage membrane waterproofing or crack isolation membrane under thresholds set in dry-set portland cement mortar. Fill joints between such thresholds and adjoining tile set on crack isolation membrane with elastomeric sealant.
      1. Metal Edge Strips: Install where exposed edge of tile flooring meets carpet, wood, or other flooring that finishes flush with or below top of tile and no threshold is indicated.
8. Grout Sealer: Apply grout sealer to cementitious grout joints in tile floors according to grout sealer manufacturer's written instructions. As soon as grout sealer has penetrated grout joints, remove excess sealer and sealer from tile faces by wiping with soft cloth.

E. Slope entire room or area to floor drains.

3.03 Tile Backing Panel Installation:

A. Install cementitious backer units and treat joints according to ANSI AlOS.11 and manufacturer's written instructions for type of application indicated. Use latex-portland cement mortar for bonding material unless otherwise directed in manufacturer's written instructions.

3.04 Waterproofing Installation:

A. Install waterproofing to comply with ANSI A108.13 and manufacturer's written instructions to produce waterproof membrane of uniform thickness and bonded securely to substrate.

B. Do not install tile or setting materials over waterproofing until waterproofing has cured and been tested to determine that it is watertight.

3.05 Cleaning and Protecting:

A. Cleaning: On completion of placement and grouting, clean all ceramic tile surfaces so they are free of foreign matter.

1. Remove epoxy and latex-portland cement grout residue from tile as soon as possible.
2. Clean grout smears and haze from tile according to tile and grout manufacturer's written instructions but no sooner than 10 days after installation. Use only cleaners recommended by tile and grout manufacturers and only after determining that cleaners are safe to use by testing on samples of tile and other surfaces to be cleaned. Protect metal surfaces and plumbing fixtures from effects of cleaning. Flush surfaces with clean water before and after cleaning.
3. Remove temporary protective coating by method recommended by coating manufacturer and that is acceptable to tile and grout manufacturer. Trap and remove coating to prevent drain clogging.

B. Protect installed tile work with kraft paper or other heavy covering during construction period to prevent staining, damage, and wear. If recommended by tile manufacturer, apply coat of neutral protective cleaner to completed tile walls and floors.

C. Prohibit foot and wheel traffic from tiled floors for at least seven days after grouting is completed.

D. Before final inspection, remove protective coverings and rinse neutral protective cleaner from tile surfaces.

E. Immediately prior to final inspection, replace all damaged tile.

F. Contractor will supply 2% of the total quantity of each tile used. Contractor will supply 3% of the total quantity of each grout used. Place materials in clean marked containers for future use at building.

End of Section

DIVISION 9 - FINISHES

SECTION 09500 - ACOUSTICAL TREATMENT

Part 1 - General

1.01 Work Included:
- A. All materials, labor, services and incidentals necessary for the completion of this section of the work.

1.02 Related Work Specified Elsewhere:
- A. Ceiling Suspension Systems - Section 09120

1.03 Quality Assurance:
- A. Standards:
  - 1. American Society for Testing and Materials:
    - a. ASTM C-636 Recommended Practice of Installation of Metal Ceiling Suspension Systems for Acoustical Tile and Lay-in Panels.
    - b. ASTM E-84 Surface Burning Characteristics of Building Materials.
  - 2. Federal Specifications:
    - a. SS-S-118B, Sound Controlling Blocks and Boards. Underwriter's Laboratories, Inc.
- B. Submittals:
  - 1. Provide submittals in the form of samples, and documentation, to the Architect for review.

1.04 **Products of certain manufacturers are specified herein to simplify descriptions of design, construction, and/or materials only. Proprietary names are not intended to imply that products of named manufacturer are required to the exclusion of equivalent products of other manufacturers**

Part 2 - Products

2.01 Acoustical Ceiling Panels:
- A. 2x2 Tile - Square Edge:
  - 1. Type: FS-SS-S-118B, Class 25
  - 2. Size: 24" x 24" x 5/8". Provide special sizes as indicated on Drawings or as required by others.
  - 3. Finish: Board finish shall be a factory-applied white latex paint, medium textured non-direction fissured surface with a minimum light reflection of 80%.
  - 4. Noncombustibility: Board shall meet class 25-Federal Specification SS-S-118B, ASTM E-84; and, classified by Underwriter's Laboratories for Flame Spread Index 0-25.
  - 5. Type Example and Manufacturer:
    - a. Armstrong Fine Fissured No. 1728, square (2x2)
- B. 2x2 Tile - Tegular Edge:
  - 1. Type: FS-SS-S-118B, Class 25
  - 2. Size: 24" x 24" x 5/8". Provide special sizes as indicated on Drawings or as required by others.

3. Finish: Board finish shall be a factory-applied white latex paint, medium textured non-direction fissured surface with a minimum light reflection of 80%.
4. Noncombustibility: Board shall meet class 25-Federal Specification SS-S-118B, ASTM E-84; and, classified by Underwriter's Laboratories for Flame Spread Index 0-25.
5. Type Example and Manufacturer:
   a. Armstrong Fine Fissured No. 1732, beveled tegular 2x2).

Part 3 - Execution

3.01 Installation:

A. Install in specified grid system per ASTM C-636 and manufacturer's recommendations, as shown on the Drawings.

B. Provide ten (10) pieces of ceiling panels in cartons for future use. Panels shall be in perfect condition.

End of Section

DIVISION 9 - FINISHES

SECTION 09650 – RESILIENT FLOORING

Part 1 - General

1.01 Work Included:
- A. All materials, labor, services, and incidentals necessary for the completion of this section of the work.

1.02 Quality Assurance:
- A. Installation Qualification: contractors for floor covering installation shall be experienced in managing commercial flooring projects and provide professional installers, qualified to install the various flooring materials specified with a minimum of three years of documented experience. Installer shall be trained by flooring manufacturer and – if applicable – certified to install the specified flooring by the manufacturer.
- B. Manufacturer Qualifications: company specializing in manufacturing the specified flooring with minimum three years documented experience.

1.03 Submittals:
- A. Submit product data for each type of product indicated.
- B. Submit samples for color selection / verification.
- C. Maintenance Data and Instructions Furnish manufacturer's recommended maintenance methods and procedures.

1.04 Delivery, Storage, and Handling:
- A. Store resilient products and installation materials in dry spaces protected from the weather, at temperatures required by the product manufacturer. Store tiles on flat surfaces.

Part 2 - Products

2.01 General:
- A. Refer to color schedule – available tile colors WILL be a factor in product acceptance.

2.02 Materials:
- A. Resilient Floor Tile:
  1. Type Example: Luxury Vinyl Composition Tile (LVT-1 and LVT-2) as manufactured by Armstrong World Industries, Inc.
  2. Size: 18” x 36”.
  3. Thickness: 0.125 inch.
  4. Pattern: Natural Creations Mystix.
  5. Location: as shown on the Drawings.
  6. Colors: refer to Drawings.
- B. Rubber Cove Base: ASTM F 1861, Type TP-Rubber as manufactured by Armstrong Cork Company or approved equal.
  1. Size: 4" high x .018 gauge.
  2. Provide preformed inside and outside corners.

C. Edging Strips and Tile Reducers: size and length as required.
D. Primer and Adhesive: As recommended by manufacturer of resilient floor tile for this particular project. All wall base and reducer strips shall be applied with epoxy adhesive.
E. Cleaner or other finishing material: As recommended by flooring manufacturer for the particular type of floor material.

Part 3 - Execution

3.01 Installation:
A. Comply with manufacturer's written instructions for installing specified tile flooring.
B. The Contractor shall be responsible for the manufacturer's representative making mat moisture and PH tests and reporting condition of concrete slab to the Architect in writing prior to placing floor materials.
C. Carefully examine the surfaces on which the above materials are to be applied, report to Architect in writing any unsatisfactory surface and do not begin work until all defective surfaces have been corrected. Otherwise, the Contractor shall assume responsibility for all failures and defects resulting from such defective surfaces.
D. Installation shall not begin until the work of all other trades, including painting, has been completed. The Contractor shall maintain all rooms and sub-floors at a minimum of 70 degrees F. for several days before and after application of tile.
E. The floor shall be thoroughly cleaned and any pockets or cracks shall be filled in accordance with manufacturer's instructions flush with floor surface.
F. The material shall be applied in a first class, workmanlike manner by skilled mechanics experienced in this type of work.
G. Primer and adhesive shall be as recommended by the manufacturer of the flooring for this particular project. The adhesive for applying all materials shall be waterproof and shall be furnished and guaranteed by the flooring manufacturer.
H. Lay tile from center of room or space, working toward perimeter, so that tile at opposite edges of room are of equal width. Adjust as necessary to avoid cut widths of less than 3 inches at room perimeter. Lay tile square to room axis.

I. Fit floor material neatly and tightly into breaks and recesses, against bases, around pipes and penetrations, under saddles or thresholds, and around permanent cabinets and equipment.

J. Install reducer at each transition from tile to concrete floor.

K. After the flooring has been installed and before the waterproof adhesive has thoroughly set, the surface shall be rolled both ways with rollers made for this purpose, and all excess adhesive on the surface or in the joints shall be removed and the entire surface shall be left perfectly clean.

3.02 Cleaning and Waxing:

A. When, in the opinion of the Contractor, the flooring has sufficiently sealed itself to permit cleaning, the floors shall be thoroughly cleaned with a neutral cleaner as recommended by the manufacturer of the flooring used. After the floors have been cleaned, the Contractor shall protect the floors either with building paper or by keeping traffic off the floors until the building is ready for occupancy.

3.03 Replacement Tile and Base:

A. Provide enough spare floor tile, of each major color, in cartons to cover 50 square feet for future use. Provide 20 linear feet of spare rubber wall base. Resilient floor tile and wall base shall be in perfect condition.

End of Section

DIVISION 9 - FINISHES

SECTION 09681 – CARPET TILE

Part 1 - General

1.01 Work Included:

A. Work includes but is not limited to providing carpet tile and installation.

1.02 Quality Assurance:

A. Standards:

1. The carpet manufacturer shall have no less than fifteen years of production experience with modular carpet similar to type specified. Published product literature of carpet manufacturer must clearly indicate compliance of products with requirements of this section.

B. Installer Qualifications:

1. The installation provider must be directly responsible for the quality of the completed floor covering installation, including both the quality of the materials and labor used in the installation. The installation provider must directly warrant to owner that all products, materials and services related to the floor covering installation (including any floor covering(s),adhesive(s) and/or other products or materials used in the installation) will meet specifications set forth herein. The product warranty required herein must be provided directly by the carpet manufacturer.
2. The installation provider must have successful carpet installation experience similar to the work of this Section and be recommended, trained and approved by the carpet manufacturer.

1.03 Submittals:

A. Manufacturer’s Data - copies, as required, of carpet manufacturer’s specifications and installation instructions for carpet and related items specified.

B. Fiber Verification – Certification from the fiber producer verifying use of the premium branded, Post-Consumer Content Type 6 fiber in the submitted carpet product.

C. All applicable product warranties provided by manufacturer.

1.04 Delivery and Storage:

A. Deliver all materials to the installation site in the manufacturer’s original packaging. Packaging to contain

manufacturers name, identification number and related information.

B. Product to be delivered as required by manufacturer. Store in pallet form as supplied by manufacturer. Do not stack pallets.

C. Store materials in area of installation for a minimum period of 48 hours prior to installation.

1.05 Installation Quality Assurance:

A. Flooring contractor to be specialty contractor normally engaged in this type of work and shall have three (3) years minimum documented experience in the installation of these materials.

B. Flooring contractor and sub-contractors must be approved by the architect and/or the carpet manufacturer.

C. Flooring contractor will be responsible for the proper product installation, including floor preparation in all the areas indicated in the drawings to receive carpet. The carpet installation standard will be as listed in The Carpet and Rug Institute's **Standard for Installation of Commercial Carpet CRI-104.**

D. Flooring contractor to provide owner a written warranty that guarantees the completed installation to be free from defects in materials and workmanship for a period of no less than one (1) year after job completion.

F. Qualifications of Installers: All work shall be done by installation firms specializing in commercial carpet installation. It is required, that the firm shall be a member of the Floor Covering Installation Contractors Association (FCICA) and/or certified by the Floor Covering Installation Board (FCIB).

G. Floor temperatures must be a minimum of 65^0 for 24 hours prior to installation. Floor temperature can usually vary $5\text{-}10^0$ lower than room temperature. Modules must be conditioned to room temperature for 24 hours prior to installation. Relative humidity must be between 10%-65% maximum for 24 hours prior to installation. These conditions must also be maintained for 48 hours after completion of installation.

H. All carpet modules must be installed in the order they were manufactured. Select pallets in sequential order and follow the numbers located on each carton of tiles. Typically, an installation will begin with the lowest

carton numbers and progress through the highest numbers until project is complete.

I. Full Spread Adhesive System: Requires a full spread adhesive system for the most trouble free installation. Fully spread adhesive using a 1/32 x 1/16 x 1/16 "U" or "V" notch trowel. Allow to completely dry so adhesive does not transfer when touched. The proper amount of adhesive is mandatory to prevent the modules from shifting or moving.

1.06 Job Conditions:

A. Sub-floor preparation is to include all required work to prepare the existing floor for installation of the product as specified in this document.

B. Carpet installation shall not commence until painting and finishing work is complete and ceiling and overhead work is tested, approved, and completed.

C. Site conditions shall include those specified in the carpet manufacturer's installation manual and shall also include sufficient heat, light, and power required for effective and efficient working conditions.

1.07 Extra Materials:

A. Provide five percent (5%) extra material for shelf stock of carpet for each color and type specified.

1.08 Warranty - Carpet:

A. Warranties must be the standard, printed warranties on the carpet manufacturer's letterhead. All warranty items to be full term, not pro-rated for the indicated period. All warranties must be issued by the manufacturer as standard published warranties on all types of carpet within this document. If the product fails to perform as warranted when properly installed and maintained according to procedures, the affected area will be repaired or replaced at the expense of the manufacturer. The carpet manufacturer, will provide standard published written performance warranties for the following:

1. **Lifetime against excessive surface wear.** Excessive wear means no more than 10% loss of pile fiber weight measured before and after use as tested under ASTM D-3936.
2. **Lifetime static protection,** meaning built-in protection below 3.0 kv as tested under AATCC-134.

B. Carpet manufacturer shall warrant carpet manufactured with secondary backing for the useful life of the original installation against product failure from:

1. Tuft Bind (edge ravel, yarn pulls, zippering)
2. Delamination
3. Moisture Penetration
4. Dimensional Stability

C. All warranties to be sole source responsibility of the carpet manufacturer. Second source warranties that involve parties other than the carpet manufacturer are unacceptable.

D. Warranties shall not be written only for this purchase or purchaser. All warranties shall be standard issue nationally
of official documents.

1.09 Performance Insurance General:

A. Flammability Requirements:
1. Pill Test / DOC-FF-1-70 (ASTM D-2589)
Requirement: Pass
2. Flooring Radiant Panel / ASTM E-648
Requirement: Class 1 (Above .45 w/cm)
3. Optical Smoke Density Test / NFPA-258 NBS Smoke Chamber (ASTM E-662)
Requirement: Less than 450, Flaming Mode
4. Comply with the Carpet and Rug Institute (CRI) VOC Chamber Test/Indoor Air Quality test (CRI-IAQ) Green Label Test

B. Face Fiber Characteristics for **all** Carpets
1. Bulked Continuous Filament (BCF),
2. Acceptable Fiber Systems: as manufactured by Aquafil.

C. Sustainable Carpet Assessment Standard:
1. NSF - 140 Gold.
2. Carpet manufacturer and/or fiber producer must be a signatory of the National Carpet Recycling Agreement memorandum of understanding.

1.10 Products of certain manufacturers are specified herein to simplify descriptions of design, construction, and/or materials only. Proprietary names are not intended to imply that products of named manufacturer are required to the exclusion of equivalent products of other manufacturers.

SECTION 09681 – CARPET TILE

Part 2 - Products

2.01 General:

A. Certified test reports shall be submitted by the carpet manufacturer, for all performance assurance specifications listed below.

B. Requirements listed below must be met by all products being submitted for approval.

C. All submitted test numbers should represent average for standard production goods.

2.02 Product Specification - Modular carpet tile shall meet the following specifications:

A. Style: InterfaceFLOR

1) Color "A" – Field: Open Air Neutrals 410 Colorline.

2) Color "B" – Accent: Aerial Flying Colors AE317.

B. Yarn: 100% Nylon (with minimum 4% post-consumer content and +/- 60% total recycled content)

C. Dye Method: 100% Solution / Yarn Dyed

D. Pile Thickness: 0.093 inch

E. Density: 6,968

F. Backing System: CQuest GB

G. Color: refer to Room Finish Schedule.

H. Special Treatments: ProTekt

2.03 Minimum Construction Standards:

A. Nylon Specification - All nylon fiber shall be branded (premium) type 6 nylon from Aquafil with performance certification from the fiber manufacturer.

B. Antimicrobial, registered by the EPA for use in carpeting with broad spectrum efficacy against the growth of bacteria and fungi for a minimum of 15 years, assuming proper maintenance. The antimicrobial ingredient shall meet standards set by the U.S. General Services Administration (GSA) for Antimicrobial Carpet as supported by independent lab testing less than six months old.

1. Intersept (AATCC 138 Washed).
2. The preservative should be incorporated into the primary latex coating of the product during the manufacturing process, not topically applied to the carpet fibers.

3. The antimicrobial treated carpet when new must pass GSA parameters for treated carpets via AATCC method 174 parts II and III. Initial performance must be 90% reduction of the microorganisms (Staphylococcus aureus 6538 and Klebsiella pneumoniae 4352) and no fungal growth on either the primary backing or fibers both on washed (AATCC method 174) and non-washed samples.
4. The antimicrobial treated carpet must maintain, for the warranted life of the carpet, a minimum of 90% reduction of the microorganisms (Staphylococcus aureus 6538 and Klebsiella pneumoniae 4352) listed in AATCC method 171 part II, provided the carpet is maintained as specified. Additionally, the antimicrobial treated carpet must maintain a "no macroscopic growth" rating against Aspergillus niger 6275 at the primary backing in accordance with AATCC 171 part III.
5. The preservative must be environmentally responsible i.e. (biodegradable and not toxic to non-target species).
6. Efficacy of the preservative should be documented in professional peer reviewed scientific publications.

2.04 Related Carpet Materials:

A. Leveling compound - Latex type as recommended by carpet manufacturer. Must be compatible with carpet adhesive and curing/sealing compound on concrete.

B. Releasable pressure sensitive type adhesive – Adhesive must be water-based and allow for removal of carpet tile at any time without damage to carpet or substrate. Adhesive must contain antimicrobial preservative and have “zero” calculated VOC’s.

C. Carpet edge guard, non-metallic - Extruded or molded heavy duty vinyl or rubber carpet edge guard of size and profile indicated, and with minimum two inch wide anchorage flange; colors selected by architect/designer from among standard colors available within the industry.

D. Miscellaneous materials - As recommended by manufacturer of carpet. Other carpeting products to be selected by installation provider to meet project requirements.

E. Electrostatic (Dissipation low-generation):
   1. < 3.0 KV (AATCC 16-E).

F. Lightfastness:
   1. $\geq$ 4.0 @ 60 AFU’s.

SECTION 09681 – CARPET TILE

Part 3 - Execution

3.01 Installation:

A. General

1. Comply with manufacturer's instructions and recommendations for uniformity of direction.
2. Install carpet under open-bottom obstructions and under removable flanges and furnishings, and into alcoves and closets of each space.
3. Provide cut outs where required. Conceal cut edges with protective edge guards or overlapping flanges.
4. Run carpet under open bottom items such as heating convectors and install tight against walls, columns and cabinets so that the entire floor area is covered with carpet. Cover over all floor type door closures.
5. Install edging guard at all openings and doors wherever carpet terminates, unless indicated otherwise.
6. Cutting shall be done in accordance with the manufacturer's recommendation, using the tools designed for the carpet being installed.
7. Use leveling compound where necessary. Any floor filling or leveling shall have a minimum of 4'0" of feather.
8. Expansion joints - Do not bridge building expansion joints with continuous carpeting.

B. Installation

1. Install carpet according to carpet manufacturer's printed instructions and in accordance with the Carpet and Rug Institute's Installation Standard.

3.03 Cleaning and Protection:

A. On completion of the installation in each area, all dirt, carpet scraps, etc. must be removed from the surface of the carpet.

B. Remove debris, and sort pieces to be saved from scraps to be redirected and recycled.

C. Construction manager shall protect carpeting against damage during construction.

3.04 Inspection:

A. Upon completion of the installation, verify that work is complete, properly installed and acceptable.

End of Section

DIVISION 9 - FINISHES

SECTION 09900 - PAINTING

Part 1 - General

1.01 Work Included:
- A. All materials, labor, services and incidentals necessary for the completion of this entire section of the work.
- B. Consult Drawings, finish schedules, details and specification section.

1.02 Quality Assurance:
- A. All painted surfaces shall be uniform in color, texture and finish to the satisfaction of the Architect.

1.03 Submittals:
- A. Submit manufacturer's specifications, including paint label analysis and application instructions for each material specified.
- B. Submit color samples for review of color and texture.
- C. Provide samples of all natural and stained wood finishes.
- D. Final samples: Prepare samples of finishes on the job to the satisfaction of the Architect. If required, a 4' x 8' portion of wall surface finished as final sample.

1.04 Product Deliver, Storage and Handling:
- A. Materials shall be delivered to the project site in strong, undamaged, waterproof containers with manufacturer's label intact. Materials in previously opened or unsealed containers, are not acceptable.
- B. Include on label of container: Manufacturer's name, type of paint, number and application instructions.
- C. Immediately upon delivery to the project site, all painter materials shall be stored and locked in a watertight shed with floor well off the ground. The shed shall remain locked at all times except for adding or removing materials.
- D. No materials of any manufacturer will be allowed on the project site any time during construction except those of the manufacturers specified or approved by the Architect.

1.05 Job Conditions:
- A. Comply with manufacturer's recommendations as to environmental conditions under which coating and coating systems can be applied.
- B. Do not apply finishes in areas where dust is being generated or where work in progress may affect finish quality.
- C. Protect finished work of other trades, and all surfaces not being painted concurrently, or not to be painted.

Part 2 - Products

2.01 General:
- A. The following specifications for Finishes is not intended to mention every particular item which will receive painter finish, but is intended to establish type and quality of finish which shall be required on various materials.
- B. **Products of Sherwin-Williams are specified herein to simplify descriptions of types and qualities of finishes required only.**

SECTION 09900 - PAINTING

Proprietary names are not intended to imply that products of named manufacturer are required to the exclusion of equivalent products of other manufacturers.

C. Wherever the abbreviation "SW" appears in the following detailed specification, it shall be understood to mean Sherwin-Williams.

D. Primers shall be as specified by manufacturers of finish paint used and as approved by the Architect.

2.02 Acceptable Manufacturers:

A. Sherwin-Williams.

B. PPG Industries.

C. Cook Paint and Varnish Co.

D. Pratt and Lambert.

E Kelly-Moore.

2.02 Exterior Finishes:

A. Enamel on Ferrous Metals:

1. One coat SW Kem Kromik Primer, (Alkyd primer).
2. Two coats SW Industrial Enamel, (Alkyd gloss enamel).

B. Enamel on Exterior Door Frames and Doors:

1. Shop coat by others-touch up as required.
2. Two coats SW Industrial Enamel, (Alkyd gloss enamel).

C. Enamel on Galvanized Metal:

1. One Coat SW Galvite primer.
2. 2 Coats SW Industrial Enamel, (Alkyd gloss enamel).

D. Enamel on Exterior Concrete Block:

1. One coat SW Promar Latex Block Filler B25W25.
2. Two coats SW A-100 Semi-Gloss Latex Enamel.

2.03 Interior Finishes:

A. Enamel on Metal: All miscellaneous and ornamental metal items which are left exposed, hollow metal doors and frames.

1. Shop coat by others - touch up as required.
2. Two coats SW Promar 200 Semi-Gloss. Enamel, (Alkyd semi-gloss enamel).

B. Enamel on Concrete Block:

1. One coat SW Promar 200 Block Filler (vinyl acrylic latex).
2. Two coats SW Promar 200 Semi-Gloss Enamel.

C. Enamel on Gypsum Board Ceilings/Facias/Walls

1. One coat SW Promar 200 Wall Primer with Medium Texture. (Vinyl Acrylic Latex Wall Primer.)
2. Two coats SW Promar 200 Semi-Gloss Latex Enamel.

D. Tape and Float: Joints on Gypsum Board.

1. As per manufacturer's instructions.
2. All joints shall be sanded ready for primer's finish.

E. Interior Millwork and Cabinetry:

1. One coat SW Promar 200 Alkyd Enamel Primer/Undercoat.
2. Two coats SW Promar 200 Semi-Gloss Latex Enamel.

F. Enamel on Wood Trim:

1. One coat SW Promar 200 Alkyd Enamel Primer/Undercoat.
2. Two coats SW Promar 200 Semi-Gloss Latex Enamel.

G. Back-Painting, Interior Work:

1. Two coats SW Promar 200 Alkyd Enamel Primer/Undercoat.

H. Enamel on Exposed Metal Piping:
   1. One coat SW Galvite primer.
   2. Two coats SW Promar 200 Semi-Gloss Latex Enamel.

Part 3 - Execution

3.01 Inspection:
   A. Notify Contractor of any surface not in proper condition to be finished before proceeding with the work. Starting work will constitute the painter's acceptance of preceding work, and conditions under which finish will be applied and his assumption of responsibility for results to be obtained.

3.02 Preparation of Surfaces:
   A. Wood:
      1. Sand to a smooth even surface, then dust off.
      2. Touch-up knots, resinous spots, etc., on all surfaces with shellac 18 hours before applying prime coat.
      3. Fill nail holes, cracks and blemishes flush after priming coat has dried.
   B. Concrete Block and Concrete:
      1. Repair cracks and irregularities to provide uniform surface texture.
   C. Ferrous Metal Surfaces:
      1. Remove rust and scale, clean grease or oil surfaces with turpentine or benzine before painting.

3.03 Application:
   A. Number of coats and quality of finish shall be in accordance with these specifications, which requires the use of material which will product first quality finish if properly applied.
   B. Apply coats of material in strict accordance with manufacturer's currently published specifications, except where requirements of these specifications are in excess or manufacturer's requirements.
   C. Except as otherwise approved by the Architect, the first two coats of painter's finish shall be applied by roller or brush application. Finish coats may be applied by spray application.
   D. Comply with recommendation of product manufacturer for drying time between succeeding coats allow additional as required until finish is dry.
   E. All work where a coat of material has been applied must be inspected and approved before application of succeeding coat, otherwise, no credit for the coat well be given. Notify Architect when a particular coat has been completed for inspection and approval.
   F. Shellacs, oils, turpentine, etc., shall be of the highest quality and subject to approval of Architect. Materials shall be mixed in and applied directly from containers which they are purchased except when use of other containers is approved.
   G. First Coat of all finishes, except of varnish and stains, shall be white.
   H. Sand lightly between coats where shellac, varnish or enamel

is used.

I. Remove all hardware, accessories, machined surfaces, and similar items in place and not to be finish-painted, or provide surface-applied protection prior to surface preparation and painting operations.

3.04 Clean-up:

A. Clean and paint spots from work and touch-up or otherwise repair any defective or damaged work.

B. Remove all surplus materials and equipment after work is completed.

C. Leave entire job clean and acceptable to the Architect.

End of Section

DIVISION 10 - SPECIALTIES

SECTION 10100 - CHALKBOARDS AND TACKBOARDS

Part 1 - General

1.01 Work Included:
- A. All materials, labor, services and incidentals necessary for the completion of this section of the work.

1.02 Quality Assurance:
- A. Standards:
  - 1. American Society for Testing and Materials:
    - a. ASTM A-424, Steel Sheets for Porcelain Enameling.
  - 2. Federal Specifications:
    - a. LL-B-810B, Hardboard.
  - 3. Military Specifications:
    - a. MIL-C-15116C, Cork Sheet.

1.03 Submittals:
- A. Shop Drawings: Submit dimensioned ship Drawings indicating location, type, size, arrangement, adhesive, backing, anchor or mounting details, trim, and accessories.
- B. Submit samples showing the full range of colors available for each unit.

Part 2 - Products

2.01 Materials:
- A. Porcelain Enamel Steel Markerboards:
  - 1. Type: Factory-built aluminum framed unit.
  - 2. Construction: Factory LCS face on 24 gauge steel laminated to 3/8" hardboard with .015 aluminum back-up.
  - 3. Color: LCS faces shall be white.
  - 4. Trim: Provide "H" bar joint cover at adjacent panels, color to match narrow leg showing, map rail with cork inserts and chalk trough.
  - 5. Accessories: Provide two map hooks with paper clips at each chalkboard unit.
  - 6. Mounting System: Concealed metal spline system. **At exterior walls provide "stand-off" mounting brackets to prevent condensation behind boards.**
- B. Tackboard:
  - 1. Type: Factory-built aluminum framed unit.
  - 2. Construction: Vinyl covered surface bonded to a 2" thick insulation board core, with a 7/8" x 5/8" aluminum frame. Refer to Color Schedule.
  - 3. Mount System: Manufacturer's standard.
  - 4. Acceptable manufacturer: Best-Rite Vin-Tak tackboards.

SECTION 10100 - CHALKBOARDS AND TACKBOARDS

Part 3 - Execution

3.01 Installation:

A. Install units straight, plumb, and level with metal splice system. Refer to Drawings.

End of Section

DIVISION 10 - SPECIALTIES

SECTION 10400 - INTERIOR SIGNAGE

Part 1 - General

1.01 Work Included:
- A. All materials, labor, services and incidentals necessary for the completion of this entire section of the work.

1.02 Quality Assurance:
- A. Standards:
  1. UFAS Fed. Std. 795-Requirements for the physically handicapped.
  2. MIL Spec. L-P-387a, type NDP, rated self-extinguishing, for sign materials.

1.03 Submittals:
- A. Provide manufacturer's catalog cut and data sheets, complete parts list and installation requirements for each item specified.
- B. Schedules: Indicate location and placement for all graphic items.

1.04 Product Delivery, Storage and Handling:
- A. Handle and store all items with care to prevent damage and injury to finish surfaces.

Part 2 - Products

2.01 Products of the manufacturers listed below have been specified herein to simplify descriptions of design, construction, and materials only. All items have been selected for visual and performance design quality which shall serve as a basis for acceptance of equivalent products by other manufacturers.

2.02 Signage System:
- A. Material: 1/8 inch thick, type ES melamine plastic.
- B. Size: 8" x 8" x 1/8", with 1/2" radius corners. Custom design - refer to 2.04 for text and symbols.
- C. Mounting: All graphics shall be permanently mounted to wall or door surface with tamper resistant screws.
- D. Color: refer to Color Schedule, submit color samples with submittals, prior to approval. **Colors will be a factor in product acceptance.**
- E. Letter Style: Helvetica Medium.
- F. Standard Grade 2 braille shall be below all copy, all signs.
- G. All graphic material shall meet the requirements of UFAS Fed. Std. 795, and MIL spec L-P-387a.
- H. Acceptable Manufacturer: Series 200A, Type D format, Mohawk Sign systems.

2.03 Plaque Groupings Required (letter designation refers to 2.04):

Quantity Plaque Mounting Location

**Coordinate location with Architect

Plaque	**Quantity**	**Location**
A	2	@ room no. 11f & @ door no. O12
B	2	@ room no. 11e & @ door no. O10
C	1	@ door no. 21
D	6	@ doors no. 7, 8, 10, 11, 12, & 13
E	1	@ door no. 18
F	6	@ doors no. 14, 17, 24, 27, 28, & 31
G	1	@ door no. 21
H	4	@ rooms no. 11g, 11h, 11j, & 11k
I	4	@ rooms no. 11d, 11c, 11b, & 11a
J	1	@ door no. O13
K	1	@ door no. O17
L	1	@ door no. O16
M	1	@ door no. O15
N	2	@ door no. O9 & O11
O	4	@ doors no. 2, 4, 6, & O4
P	1	@ door no. 18

2.04 Signage Plaques Required:

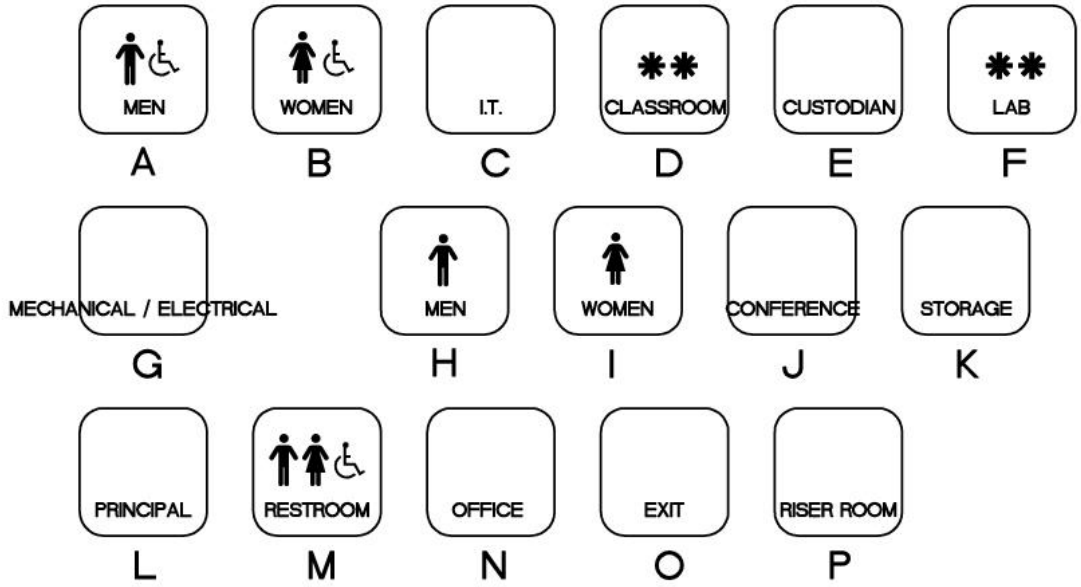

✱✱ INDICATES ROOM NUMBER TO BE COORDINATED WITH ARCHITECT AND OWNER

Note: all signage plaques shall have grade 2 braille translations under text.

2.05 Typical Mounting:

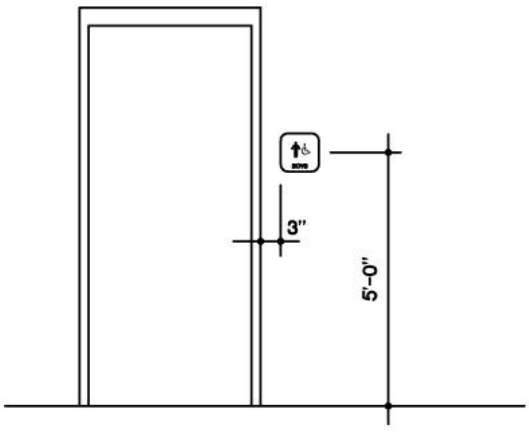

Mounting Height

Typical Wall Location

Verify location with architect.

SECTION 10400 - INTERIOR SIGNAGE

Part 3 - Execution

3.01 Installation:

A. Comply with manufacturer's installation instructions and details on the Drawings. Set all units plumb and level in location indicated on the Drawings or as directed.

B. Provide all necessary accessories: Items to support or attach Identifying Devices to result in a complete installation.

C. Protect all signage plaques to prevent damage after installation.

End of Section

DIVISION 10 - SPECIALTIES

SECTION 10420 - LETTERS AND PLAQUES

Part 1 General

1.01 Work Included:
A. All materials, labor, services, and incidentals necessary for the completion of this entire section of the work.

1.02 Submittals:
A. Shop Drawings: Indicate details and dimensions of fabrication and installation including layouts and assemblies. Begin fabrication only after receiving approved shop Drawings.
B. Manufacturer's Literature: Descriptive literature and installation instructions.

1.03 Product Delivery, Storage, and Handling:
A. Handle and store all items with care to prevent damage and injury to finish surfaces.

Part 2 - Products

2.01 Cast Letters at exterior locations:
A. Finish: painted finish.
B. Color: **DARK BRONZE.**
C. Letter Style: **OPTIMA FONT.**
D. Size: height - **24".**
E. Mounting: coordinate with Architect.
F. Quantity: Sufficient letters to spell out the following (quantities in parentheses):

1. **HIGHLAND WEST JUNIOR HIGH** (X 1)

G. Verify exact spelling/punctuation with Architect.
H. Location: refer to the Drawings.
I. Acceptable Manufacturer: A.R.K. Ramos, Oklahoma City.

2.02 Cast Metal Plaque at interior location:

A. Castings shall be free from pits, scale, sand holes, or other defects. Comply with requirements specified for metal, border style, background texture, and finish, and with requirements shown for thickness, size, shape, and copy. Hand-tool and buff borders and raised copy to produce the manufacturer’s standard satin polished finish. Coordinate final design with Architect.
1. Metal: aluminum.
2. Border Style: Type 504.

3. Background Texture: manufacturer's standard No. 2 black pebble texture.
4. Letter Style: Helvetica upper case – raised satin aluminum finish.
5. Mounting Method: No. 4 concealed fasteners.
6. Finish: manufacturer's satin aluminum finish.
7. Size: 20 inches x 24 inches.
8. Content:

HIGHLAND WEST JUNIOR HIGH SCHOOL
STEM CLASSROOM ADDITION
MOORE PUBLIC SCHOOLS

SUPERINTENDENT OF SCHOOLS:
DR. ROBERT ROMINES

BOARD OF EDUCATION:

ALLISON RICHEY	PRESIDENT
STACI PRUETT	VICE PRESIDENT
MANDY KINCANNON	MEMBER
ERIN MORRISON	MEMBER
JENNY NGUYEN-STATLER	MEMBER

ASSISTANT SUPERINTENDENT – OPERATIONS:
JEFF HORN

ARCHITECT:
AGP – THE ABLA GRIFFIN PARTNERSHIP LLC
MOORE, OKLAHOMA

CONTRACTOR:
OMNI CONSTRUCTION LLC
MOORE, OKLAHOMA

9. Type Example: ARK-Ramos Manufacturing Company, Inc.

Part 3 - Execution

3.01 Installation:

A. Install units plumb and level in locations indicated on the Drawings, following manufacturer's recommendations.
B. Provide all necessary accessories: Items to support or attach metal letters to result in a complete installation.

C. Protect all finishes to prevent damage before, during and after installation.

End of Section

DIVISION 10 - SPECIALTIES

SECTION 10520 - FIRE PROTECTION SPECIALTIES

Part 1 General

1.01 Work Included:
- A. All materials, labor, services and incidentals necessary for the completion of this entire section of the work.

1.02 Submittals:
- A. Submit Manufacturer's Literature: Descriptive literature, product data and installation instructions.

1.03 Product Delivery, Storage and Handling:
- A. Handle and store all items with care to prevent damage to equipment. Damaged equipment shall be rejected.

1.04 Quality Assurance:
- A. Standards:
  1. Conform to NFPA 10 requirements for portable fire extinguishers.
- B. Provide fire extinguishers, cabinets and accessories by a single manufacturer.

1.05 **Products of certain manufacturers are specified herein to simplify descriptions of design, construction, and/or materials only. Proprietary names are not intended to imply that products of named manufacturer are required to the exclusion of equivalent products of other manufacturers.**

Part 2 - Products

2.01 Materials:
- A. Fire Extinguishers:
  1. Model No. 10E - Cosmic multi-purpose dry chemical fire extinguisher. UL, 4A-60-BC.
- B. Fire Extinguisher Cabinets:
  1. Model No.: Academy 1026V10 with return trim as required with rolled edge.
  2. Door Style: Contemporary V, with flat trim.
  3. Glazing: 1/4" clear acrylic.
  4. Finish: Aluminum, mill finish, clear anodized.
  5. Fire Rated Enclosure: provide fire stopping material to protect integrity of fire rated partition as required by applicable codes and standards.

Part 3 - Execution

3.01 Installation:
- A. Install equipment as located on the Drawings and comply with manufacturer's written instructions for equipment provided.
- B. Prepare recesses in walls for fire extinguisher cabinets as required for type and size of cabinet and style of trim, and

to comply with manufacturer's instructions.

C. Securely fasten mounting brackets and fire extinguisher cabinets to the structure, square and plumb, to comply with manufacturer's instructions.

D. Check extinguishers for proper charge operation.

E. Remove and replace damaged, defective or under charged units.

End of Section

DIVISION 10 - SPECIALTIES

SECTION 10731 - PREFINISHED METAL CANOPIES

Part 1 - General

1.01 Work Included:
- A. Work in this section includes the furnishing and installation of roll-formed aluminum overhead hanger rod style canopies.
- B. Metal trim, accessories, fasteners, and sealants related to the canopy system.

1.02 Quality Assurance:
- A. Manufacturer shall demonstrate a minimum of five years of experience in the specified products and applications.
- B. Products must meet the minimum standards established by this specification. Materials, accessories, testing, and processes specified shall establish the minimum level of quality, performance, dimension, and appearance required of any substitution.
- C. Proposed substitutions shall include a complete description of the proposed substitution including testing, samples, and other information necessary to demonstrate the equivalency of the substitute.

1.03 Related Items and Considerations:
- A. Flashing of various designs may be required. Generic flashing shall be supplied by canopy manufacturer and installed by canopy installer.
- B. Determine wall construction, make-up, and thickness.
- C. Ensure adequate wall condition to carry canopy loads where required.

1.04 Field Measurements and Submittals:
- A. Confirm dimensions prior to preparation of shop drawings prior to fabrication of canopies.
- B. Provide manufacturer's product data and specifications for canopies.
- C. Provide shop drawings indicating structural component locations / positions, material dimensions, and details of construction and assembly.

1.05 Performance Requirements:
- A. Canopy must conform to all applicable / local building codes.
- B. Confirm specific load requirements have been established for canopies and provide stamped calculations if required by the Jurisdiction Having Authority.

1.06 Warranty:
- A. Manufacturer shall warrant for a minimum period of one year that the canopies, trim, and accessories furnished by the manufacturer will be free from defects in materials and factory workmanship.

SECTION 10731 - PREFINISHED METAL CANOPIES

1.07 Delivery, Storage, and Handling:
A. Deliver and store all canopy components in protected areas.

1.08 **Products of certain manufacturers are specified herein to simplify descriptions of design, construction, and/or materials only. Proprietary names are not intended to imply that products of named manufacturer are required to the exclusion of equivalent products of other manufacturers.**

Part 2 - Products

2.01 Acceptable Manufacturer:
A. Lumishade Canopy or Sunshade Canopy with prefinished Hanger Rods w/ turnbuckles as manufactured by:
Mapes Canopies
Lincoln, Nebraska
Phone: 888-273-1132
Fax: 877-455-6572

2.02 Materials:
A. Decking shall consist of LumiShade interlocking roll-formed (minimum 0.032" aluminum) 2 ½ W-style pan or SuperShade Louvers roll-formed (minimum 0.110" aluminum) as applicable.
B. Intermediate framing members shall be extruded aluminum, alloy 6063-T6, in profile and thickness required by specified unit.
C. Hanger rods and attachment hardware shall be powder coated.
D. Provide compression sleeves at thru bolts as necessary. Round escutcheon plates shall be provided.
E. Fascia shall be standard 8" extruded “J” style (minimum 0.125 aluminum).

2.03 Finishes:
A. Match existing 2019 Field House building. Final color to be selected by Architect.

2.04 Fabrication:
A. Canopies shall be shipped in preassembled sections for ease of installation.
B. All connections shall be mechanically assembled utilizing 3/16 inch fasteners with a minimum shear stress of 350 pounds. Pre-welded or factory-welded connections are not acceptable.
C. Decking shall be designed with interlocking roll-formed aluminum members.
D. Where applicable, provide concealed drainage – water shall drain from covered surfaces into intermediate

trough and be directed to the rear for ground level discharge via designated downspouts at each end of canopy.

Part 3 - Execution

3.01 Inspection:

A. Confirm that surrounding area is ready for the canopy installation.

B. Installer shall confirm dimensions and elevations to be as shown on drawings provided by the manufacturer.

C. Erection shall be performed by an approved installer and scheduled after all concrete, masonry, and roofing in the area is completed.

3.02 Installation:

A. Installation shall be in strict accordance with the manufacturer's approved shop drawings. Particular attention shall be given to protecting the finish during handling and installation.

B. Canopy installer shall demonstrate at least five years of experience installing similar products and applications.

C. After installation is complete, entire system shall be wiped-down and left in a clean condition.

End of Section

DIVISION 10 - SPECIALTIES

SECTION 10800 - TOILET AND BATH ACCESSORIES

Part 1 - General

1.01 Work Included:
- A. All materials, labor, services, and incidentals necessary for the completion of this section of the work.

1.02 Submittals:
- A. Provide manufacturer's catalog cut and data sheets, complete parts list and installation requirements for each accessory item specified.
- B. Where applicable, submit maintenance data, operating instructions and keys required for each type of equipment and lock.

1.03 **Products of certain manufacturers are specified herein to simplify descriptions of design, construction, and/or materials only. Proprietary names are not intended to imply that products of named manufacturer are required to the exclusion of equivalent products of other manufacturers.**

Part 2 - Products

2.01 The following model numbers refer to products of Bradley Corporation (except where noted otherwise).

2.02 Accessories:
- A. Grab Bars:
  1. Model No. 8120-001360-36".
  2. Quantity: 1 each @ rooms 11e and 11f
- B. Grab Bars:
  1. Model No. 8120-001420-42".
  2. Quantity: 1 each @ rooms 11e and 11f
- C. Grab Bars:
  1. Model No. 8120-001180-18".
  2. Quantity: 1 each @ rooms 11e and 11f
- D. Tilted Stainless Steel Mirror (Frame and Surface):
  1. Model No. 740-1830.
  2. Quantity: 2 total with 1 each side of room 11 (above washfountains)
- E. Stainless Steel Mirror (Frame and Surface):
  1. Model No. 781-1830
  2. Quantity: 2 total with 1 each side room 11 (above washfountains)
- F. Custodian's Utility Shelf/With Mop & Broom Holder:
  1. Model No. 9984, 36" long.
  2. Quantity: 1 @ room 12
- G. Toilet Paper Dispensers to be provided by Owner and installed by Contractor.
- H. Paper Towel Dispenser to be provided by Owner and installed by Contractor.

I. Soap Dispenser to be provided by Owner and installed by Contractor.

Part 3 - Execution

3.01 General:

A. Install where noted on the Drawings and mount as indicated or per manufacturer's recommendations.

B. Use concealed or tamper-proof fasteners of same material and finish as unit. Provide anchors, bolts, and other mounting devices and attach units securely.

End of Section

SECTION 01 57 13

EROSION AND SEDIMENT CONTROL GENERAL

1.01 RELATED DOCUMENTS.

A. Drawings and general provisions of the Contract, including General and Supplementary Conditions and all Specification Sections, apply to this Section.

1.02 SUMMARY

A. Work under this section shall include all labor, materials and equipment necessary to meet all applicable requirements and as specified in the contract.

B. Section Includes:
   1. Installation and maintenance of both temporary and permanent soil erosion and sediment control measures
   2. Slope protection and stabilization practices.
   3. Implementation of the Stormwater Pollution Prevention Plan (SWPPP) to protect surface water quality.

C. Related Sections:
   1. Division 31 Section "Site Clearing" for site stripping, grubbing, stripping and stockpiling topsoil, and removal of above- and below-grade improvements and utilities.
   2. Division 31 Section "Dewatering" for lowering and disposing of ground water during construction.
   3. Division 32 Section "Turf and Grasses" for finish grading in turf and grass areas, including preparing and placing planting soil for turf areas.

1.03 UNIT PRICES

A. Work in this Section is affected by unit prices for erosion and sediment control specified in Division 01 Section "Unit Prices."

1.04 DEFINITIONS

A. Backfill: Soil material or controlled low-strength material used to fill an excavation.

B. Baffles: Porous barriers installed inside a temporary sediment trap, rock dam sediment trap, sediment basin, or skimmer sediment basin used to reduce velocity (turbulent flow) of the water flowing through the measure and facilitate the settling of sediment from the water before discharge.

C. Borrow Soil: Satisfactory soil imported from off-site for use as fill or backfill

D. Check Dam: A small temporary stone dam constructed across a drainage way (such as a temporary diversion ditch) used to reduce erosion in the channel and trap sediment behind the dam.

E. Construction Sequence: Schedule of work sequenced to control the timing of land disturbing activities and installation of erosion and sediment control measures.

F. Excavation: Removal of material encountered above subgrade elevations and to the limits and dimensions indicated.

G. Fill: Soil materials used to raise existing grades.

H. Inlet Protection: A temporary measure used to prevent sediment from entering inlets and conduit systems during construction. Inlet protection allows protected early use of storm drainage system and provides sediment storage around inlets.

I. Land Grading: Re-shaping the ground surface to designed proposed grades to accommodate development.

J. Landscape Planting: Stabilizing disturbed areas by establishing vegetative cover with trees, shrubs, vines and/or ground cover.

K. Level Spreader: A non-erosive outlet for concentrated runoff constructed to disperse flow uniformly over a long slope.

L. Mulching: Application of a protective blanket of straw, wood chips, shredded bark, gravel or synthetic material to bare soil surface.

M. Outlet Stabilization Structure (Riprap Apron): A structure designed to dissipate energy, reduce velocity and control erosion at the outlet of a pipe or channel.

N. Permanent Seeding: Establishment of permanent perennial vegetative cover with seed to control runoff and minimize erosion.
O. Rolled Erosion Control Products (RECP): Rolled erosion control products are manufactured or fabricated into rolls designed to reduce soil erosion and assist with the growth and establishment of vegetation. Products include mulch control netting, open weave textiles, erosion control blankets, and three dimensional turf reinforcement mats.
P. Sediment (Silt) Fence: A temporary sediment control measure consisting of fabric buried at the bottom, stretched and supported by (sometimes wire and) posts. Measure retains sediment laden flow from small disturbed areas and allows sediment deposition.
Q. Sediment Control Structure: A temporary (or permanent only when used in conjunction with a permanent detention or retention basin) structure used to detain sediment laden water, diminish turbulent flow, and allow sediment to settle. Retains sediment on construction site to prevent sedimentation in receiving waters.
R. Skimmer (Skimmer Sediment Basin): An earthen embankment with a trapezoidal spillway lined with impermeable geotextile or laminated plastic membrane and equipped with a floating skimmer for dewatering. Skimmer basins are designed to provide an area for runoff to pool and settle
S. Sodding: Establishing permanent cover by laying a continuous layer of grass sod.
T. Subgrade: Uppermost surface of an excavation or the top surface of a fill or backfill immediately below subbase, drainage fill, drainage course, or topsoil materials.
U. Subbase Course: Aggregate layer placed between the subgrade and base course for hot-mix asphalt pavement, or aggregate layer placed between the subgrade and a cement concrete pavement or a cement concrete or hot-mix asphalt walk
V. Surface Roughening: Roughening the soil surface on a slope with horizontal grooves cross-slope, stair stepping or tracking with construction equipment.
W. Temporary Diversions: A temporary ridge or excavated channel, or both, constructed across sloping land on a pre-determined grade. Temporary Diversions must extend to sediment control structures.
X. Temporary Gravel Construction Entrance/Exit: A graveled pad located at points where vehicles and equipment leave the construction site.
Y. Temporary Seeding: Planting rapid-growing annual grasses, small grains, or legumes to provide initial, temporary cover for erosion control on disturbed areas.
Z. Temporary Slope Drain: Flexible pipe extending from the top to the bottom of a cut or fill slope used to transport sediment laden water from a temporary diversion into a sediment control structure.
AA. Temporary Sediment Trap: A small, temporary ponding basin, without a pipe outlet structure, formed by an embankment or excavation to capture sediment. Structure detains sediment laden runoff, reduces turbulent flow and allows sediment to drop out to protect receiving waters.
BB. Temporary Sediment Basin: A larger temporary or part of a permanent system, including a controlled outlet structure, used to detain sediment laden water, diminish turbulent flow, and allow sediment to settle. Retains sediment on construction site to prevent sedimentation in receiving waters.
CC. Top-soiling: Preserving and using topsoil to enhance final site stabilization with vegetation.
DD. Tree Preservation: Practices used to preserve and protect trees from damage during construction.
EE. Utilities: On-site underground pipes, conduits, ducts, and cables, as well as underground services within buildings

1.05 SUBMITTALS

A. Qualification Data: For third party 'Qualified Inspector (Professional)' if not provided by the Owner.
B. Off-site Soil Qualification: For each borrow or waste site for soil material proposed for fill and/or waste that is not permitted under the Project site NPDES coverage:
    1. Copy of the site's NPDES Notice of Coverage (or similar coverage/approval document)
    2. Copy of the erosion and sediment control plan including best management practices and stabilization schedules to be used to include the site under the current NPDES Permit coverage.

1.06 QUALITY ASSURANCE

A. Intent: The main concern associated with erosion and sedimentation on the site is movement of sediment to off-site and off-site receiving waters and its affect on water quality. The Owner's intent is that the Contractor install, inspect, maintain and modify sufficient erosion and sediment control practices to retain sediment within the boundaries of the site in addition to complying with all regulatory codes, laws, rules, and ordinances. All erosion and sediment control measures shall conform to the drawings and to the latest requirements imposed by federal, state and local authorities. The Contractor is responsible for any repair and damages and shall be financially responsible for any penalties imposed.

B. Drawing Review: It is the Contractor's responsibility to review the erosion and sediment control drawings and the Storm Water Pollution Prevention Plan (SWPPP) prepared by the engineer prior to implementation. All measures shall be implemented in accordance with this specification, contract drawings and documents and all regulatory authorities having jurisdiction. Where conflicting requirements arise the more restrictive rules shall govern.

C. Contractor Responsibility: Contractor is to provide all temporary and permanent non-structural and structural measures shown on the drawings, and as directed by the Owner or NPDES authority for the duration of the work. SWPPP and Erosion and Sediment Control drawings are guidelines, additional measures not specified may be necessary and shall be implemented to address conditions that may develop during the construction process. Additional measures needed but not specified in the SWPPP or on the drawings shall be at no additional cost to the Owner.

D. Coordination: Temporary structural measures shall be coordinated with permanent measures to the extent practical to assure economical, effective and continuous erosion and sediment control throughout construction and a seamless transition between temporary and permanent post construction operation.

E. Contractor Inspections: Contractor shall inspect all erosion and sediment control measures at least at the beginning and at the end of each day to ascertain all devices are functioning properly during construction. Contractor shall fully and completely inspect the entire site once every seven (7) calendar days and within 24 hours of 0.5 inches (12 mm) of rain or more per 24 hour period, or more often if required by the governing Construction General Permit; these inspection findings must be reported on Form C-1. Any measures found to be unsatisfactory during that inspection shall be corrected within 48 hours of the inspection. The Owner may suspend the performance of any or all other construction work until the unsatisfactory condition has been corrected. Such suspension shall not be the basis of any claim by the Contractor for additional compensation nor for an extension of time to complete the work. Any Notices of Violations (NOV), fines or other corrective actions requested by authorities having jurisdiction or by the Owner shall be the sole responsibility of the Contractor.

F. Contractor Response to Notice of Violation: Should the Contractor receive an inspection report or Notice of Violation from the regulatory authority (NPDES authority, Natural Resources Conservation Service, or other county or city authority) the report or notice shall immediately be forwarded to the Owner's representative. The Contractor shall **not** respond to an inspection or Notice of Violation without first gaining approval for the response from the Owner.

G. Protect Adjacent Properties: Contractor is to protect adjacent properties, watercourses, threatened, endangered and protected species and critical habitats, any identified cultural, archeological or historic resources, and receiving water resources from erosion and sediment damage throughout the time of construction.

H. SWPPP Pre-construction Meeting: Prior to beginning work, a pre-construction SWPPP meeting shall be held by the Owner and the site engineer. The General Contractor and its site work subcontractor must be present at this meeting.

1.07 PROJECT CONDITIONS

A. Traffic: Minimize interference with adjoining roads, streets, walks, and other adjacent occupied or used facilities during earth moving operations.

1. Do not close or obstruct streets, walks, or other adjacent occupied or used facilities without permission from Owner and authorities having jurisdiction.
2. Provide alternate routes around closed or obstructed traffic ways if required by Owner or authorities having jurisdiction.

B. Improvements on Adjoining Property: Authority for performing earth moving indicated on property adjoining Owner's property will be obtained by Owner before award of Contract.
   1. Do not proceed with work on adjoining property until directed by Owner.
C. Utility Locator Service: Notify utility locator service for area where Project is located before beginning earth moving operations.
D. Do not commence earth moving operations until all Phase I temporary sediment control measures are in place.
E. Do not commence earth moving operations until plant-protection measures specified in Division 01 Section "Temporary Tree and Plant Protection" are in place.
F. The following practices are prohibited within protection zones:
   1. Storage of construction materials, debris, or excavated material.
   2. Parking vehicles or equipment.
   3. Foot traffic.
   4. Erection of sheds or structures.
   5. Impoundment of water.
   6. Excavation or other digging unless otherwise indicated.
   7. Attachment of signs to or wrapping materials around trees or plants unless otherwise indicated.
G. Do not direct vehicle or equipment exhaust towards protection zones.
H. Prohibit heat sources, flames, ignition sources, and smoking within or near protection zones.

PART 2 - PRODUCTS

2.01 SOIL MATERIALS

A. General: Provide borrow soil materials when sufficient satisfactory soil materials are not available from excavations.
B. Riprap: ASTM D 4992-94 evaluation; ASTM D 6092-97e1 standard practice for size specification.
C. Sand: ASTM C 33; fine aggregate.

2.02 GEOTEXTILES

A. Subsurface Drainage Geotextile: Nonwoven needle-punched geotextile, manufactured for subsurface drainage applications, made from polyolefins or polyesters; with elongation greater than 50 percent; complying with AASHTO M 288 and the following, measured per test methods referenced:
   1. Survivability: Class 2; AASHTO M 288.
   2. Grab Tensile Strength: 157 lbf (700 N); ASTM D 4632.
   3. Sewn Seam Strength: 142 lbf (630 N); ASTM D 4632.
   4. Tear Strength: 56 lbf (250 N); ASTM D 4533.
   5. Puncture Strength: 56 lbf (250 N); ASTM D 4833.
   6. Apparent Opening Size: No. 70 (0.212-mm) sieve, maximum; ASTM D 4751.
   7. Permittivity: 0.1 per second, minimum; ASTM D 4491.
   8. UV Stability: 50 percent after 500 hours' exposure; ASTM D 4355.
B. Separation Geotextile: Woven geotextile fabric, manufactured for separation applications, made from polyolefins or polyesters; with elongation less than 50 percent; complying with AASHTO M 288 and the following, measured per test methods referenced:
   1. Survivability: Class 2; AASHTO M 288.
   2. Grab Tensile Strength: 247 lbf (1100 N); ASTM D 4632.
   3. Sewn Seam Strength: 222 lbf (990 N); ASTM D 4632.
   4. Tear Strength: 90 lbf (400 N); ASTM D 4533.
   5. Puncture Strength: 90 lbf (400 N); ASTM D 4833.
   6. Apparent Opening Size: No. 60 (0.250-mm) sieve, maximum; ASTM D 4751.
   7. Permittivity: 0.02 per second, minimum; ASTM D 4491.
   8. UV Stability: 50 percent after 500 hours' exposure; ASTM D 4355.
C. Sediment Fence: Fabric with slit tape yarns in one direction (warp or fill) only. Fabric must have strong rot-proof synthetic fibers formed into either a woven or non-woven fabric.
   1. Fabric may be manufactured with pockets for posts, hems with cord, or with posts pre-attached using staples or button head nails.

2. Fabric to have manufacturer's mark, either with an approved color mark yarn in the fabric or the manufacturer's name and product trade name labeled on the fabric at a minimum of 100 ft (30 m) intervals.
3. Fabric has no treatment or coating that might significantly alter its physical properties after installation.
4. Contains stabilizers and/or inhibitors to make the filaments resistant to deterioration from sun or heat exposure.
5. Makes a pervious sheet of synthetic fibers oriented into a stable network so that the fibers retain relative position with respect to each other under normal handling, installation, and service conditions.
6. Has finished fabric edges to prevent the outer yarn from pulling away from the fabric.
7. Have no defects or flaws that would significantly affect physical and/or functional properties.
8. Has the following physical and dimensional requirements and properties:
    a. Minimum tensile strength in pounds (Newtons): Warp 260 (1155), Fill 180 (800) ASTM D 4632.
    b. Elongation: 40%, ASTM D4632
    c. Apparent opening size (max. sieve size): No. 30 (600 um), ASTM D 4751
    d. Flow rate in gallons per minute per square foot (L/min./m^2): 70 (2850)
    e. Ultraviolet stability (percent of required initial minimum tensile strength): 80% ASTM D4632 and ASTM D4355
    f. Permittivity: 0.1 per second, minimum; ASTM D 4491.
    g. Bursting strength, psi (kPa): 175 (1200), ASTM D 3786
    h. Minimum fabric width: 36" (900 mm)

D. RECP: Rolled Erosion Control Products, woven geo-textile fabric, manufactured for the establishment of vegetation for erosion control including:
1. Mulch Control Netting: Planar woven natural fiber or extruded geo-synthetic mesh used as a temporary degradable RECP to anchor loose fiber mulches. Maximum gradient for slope applications 5:1 ASTM D6459, maximum permissible shear stress channel applications is 0.25 lbs per square foot ASTM D6460, minimum tensile strength 5 lbs/ft ASTM D5035.
2. Open Weave Textile: Temporary degradable RECP composed of processed natural or polymer yarns woven into a matrix, used to provide erosion control and facilitate vegetation establishment. Maximum gradient for slope applications 3:1 ASTM D6459, maximum permissible shear stress channel applications is 1.50 lbs per square foot ASTM D6459, minimum tensile strength 50 lbs/ft ASTM D5035.
3. Erosion Control Blanket: Temporary degradable RECP composed of processed natural or polymer fibers mechanically, structurally or chemically bound together to form a continuous matrix to provide erosion control and facilitate vegetation establishment. Maximum gradient for slope applications 2:1 ASTM D6459, maximum permissible shear stress channel applications is 1.75 lbs per square foot ASTM D6460, minimum tensile strength 75 lbs/ft ASTM D5035.
4. Turf Reinforcement Mat: Long-term non-degradable RECP composed of UV stabilized, non-degradable, synthetic fibers, filaments, nettings, and/or wire mesh processed into three dimensional reinforcement matrices designed for permanent and critical hydraulic applications where design discharges exert velocities and shear stresses that exceed the limits of mature, natural vegetation. TRM provide sufficient thickness, strength and void space to permit soil filling and/or retention and the development of vegetation within the matrix. Maximum gradient for slope applications 1:1 ASTM D6459, maximum permissible shear stress channel applications is 8.0 lbs per square foot ASTM D6460, minimum tensile strength 150 lbs/ft ASTM D5035, minimum thickness 0.25 inches (6.35 mm) ASTM D6525.

2.03 SEDIMENT FABRIC FENCING

A. Woven wire fabric fencing to be used with sediment fabric:
1. Ensure wire fence fabric is at least 32 inches (810 mm) high with at least 6 horizontal wires.
2. Ensure the vertical wires have maximum spacing of 6 inches (78 mm)
3. Ensure the top and bottom wires are at least 10 gauge (2.49 mm) and all other wires are at least 14 gauge (3.48 mm).

B. Posts: Use post sizes and types as determined by the type of fence being installed. Hardwood posts are limited to ash, hickory, or oak, or other approved hardwood or softwood.
   1. Wood Posts: At least 2” (50 mm) in diameter or 2” x 2” (50 x 50 mm) 5 feet (1.5 m) long, and straight enough to provide a fence without a noticeable misalignment. Wood shall be commercial quality lumber of size and shape indicated. Each stake shall be free from decay, splits or cracks longer than the thickness of the stake or other defects that would weaken the stakes and cause the stakes to be structurally unsuitable.
   2. Steel posts to be “U”, “T”, or “C” shaped with a minimum weight of 1.15 pounds per foot (1.7 kg/m), 5 feet (1.5m) long, and have projections for fastening the fence to the posts.
   3. Fasteners for Wood Posts: Wire staples that are at least 17 gauge (1.37 mm), legs at least ½ inch (13 mm) long, and a crown of at least ¾ inch (19 mm) wide.
   4. Nails for Wood Posts: Use nails that are at least 14 gauge (2.03 mm), 1 inch (25 mm) long, with button heads of at least ¾ inch (19 mm).

2.04 SKIMMER

A. Skimmer: The Skimmer is a dewatering device used to slowly dewater sediment basins from the top of the water column. Manufactured by J.W. Faircloth & Son, Post Office Box 757, Hillsborough, NC, 27278. Telephone (919) 732-1244, or approved equal.

PART 3 - EXECUTION

3.01 GENERAL REQUIREMENTS

A. The Contractor shall comply with and fully implement the Stormwater Pollution Prevention Plan (SWPPP) provided in the contract documents.
B. Prior to beginning work, review erosion and sediment control drawings as they apply to the current site conditions. Any deviation from the drawings shall be submitted to the Owner and site engineer at least 72 hours prior to commencing that work.
C. Hold a SWPPP pre-construction meeting prior to beginning work.
D. Where required by the governing Construction General Permit, the General Contractor is to notify NPDES authority, in writing (or as required by local regulations) prior to initial land disturbance.

3.02 PREPARATION

A. Sequence of Construction: The approved construction sequence, as permitted and approved shall be adhered to during the execution of the work. All grading, drainage, best management practices (BMPs) for erosion and sediment control and all stabilization measures shall be constructed in the order presented in the Sequence of Construction. Modifications to the Sequence of Construction may occur only as approved by the Owner (and authority having jurisdiction when required).
   1. PHASE ONE Erosion and Sediment Control: All Phase One erosion and sediment control measures including but not limited to the required NPDES postings at the construction entrance/exit, construction of the temporary gravel construction entrance/exit, installation of perimeter sediment fence, temporary sediment basins and traps, and temporary diversion channels to sediment control structures shall be completed prior to any major land disturbing activity, including grubbing. Land disturbing activity during Phase One will be limited to the areas necessary to install Phase One best management practices only.
   2. PHASE TWO Erosion and Sediment Control: Grading (and mass grading) activity shall commence in Phase Two and includes additional erosion and sediment control measures as indicated on the drawings Contractor is to provide inspection, maintenance and recordkeeping throughout Phase One until Final Stabilization.
   3. PHASE THREE Erosion and Sediment Control: When complexity of project requires additional phases, they shall commence and be adhered to in the order presented on the drawings and in the SWPPP unless modified and approved by the Owner (and authority having jurisdiction when required).
B. Temporary Construction Entrance/Exit and Lay Down Area:
   1. Temporary construction entrance/exit shall be installed and maintained as shown on the drawings. In addition to the entrance/exit shown on the drawings, a temporary gravel construction entrance/exit shall be installed and maintained at any point where construction

vehicles enter a public right-of-way, street or parking area, or exit the site. The pad shall be used to reduce mud tracked from construction vehicles onto public streets. The entrance/exit pad shall be constructed as shown on the drawings. Any sediment tracked onto the public street shall be cleaned immediately.

2. A 30,000 square foot, 6" thick stone base lay down area shall be established at grade and as located on the drawings or as directed by the Owner. A 24 foot gravel drive shall connect the temporary gravel construction entrance/exit and the lay down area, and the lay down area and the building pad. When the job nears completion, this stone may be incorporated into the pavement section provided it is in place and any overlying contaminated material has been removed.

3.03 DRAWING INTENT

A. Implementation of the erosion and sediment control measures shown on the drawings include but may not be limited to the approved measures. Contractor is responsible for providing all measures necessary that may be additional to accomplish the intent of the drawings. The quantity of best management practices shown on the drawings may be affected by actual conditions that occur during construction of the project. Additional sediment fence, diversion channels, sediment traps, inlet protection, and any other measure shown on the drawing may be necessary to provide adequate sediment control.

3.04 DEWATERING

A. Discharge from dewatering operations for the excavated areas shall not be directed to surface waters without first properly removing the suspended sediment from the water. The Contractor shall obtain any required permits associated with dewatering activities.

3.05 STABILIZATION

A. Limit Disturbed Area: Contractor to limit disturbed earthwork operations to the area commensurate with the Contractor's capability in keeping finished grading, seeding, mulching, stone base, and other control measures current and in accordance with the Schedule of Construction Activity. Should seasonal limitations make such coordination unrealistic, as determined by the Owner, temporary erosion control measures (stabilization) shall be provided immediately by the Contractor at no expense to the Owner.

B. Temporary Stabilization: The Contractor shall incorporate all permanent erosion control measures into the project at the earliest practical time to minimize the need for temporary stabilization. Temporary stabilization shall be used where stabilization is needed or required prior to installation of permanent measures due to seasonal concern or NPDES stabilization requirements.

C. Ground Cover Sufficient to Restrain Erosion: Any disturbed area where grading activities have temporarily or permanently ceased for more than 14 days (or a shorter time required by the local NPDES authority) shall be seeded, mulched and watered. Permanent stabilization consists of permanent seeding and landscaping per specification or stone base for paving or building construction. Temporary stabilization may include temporary seeding, mulch, stone base, mulch fiber matrix, or other methods.

D. Slopes: Slopes shall be permanently seeded and mulched as excavation or fill proceeds to the extent possible. Slopes shall be temporarily seeded and mulched as necessary. Any graded slopes steeper than 3:1 shall be protected with erosion control blanket (RECP) as indicated on the drawings.

3.06 OWNER INSPECTION

A. The Owner's representative shall inspect the site and recordkeeping materials at least once per month.

B. If Owner determines that the site is out of compliance with the governing NPDES Permit, the Contractor will have 24 hours to initiate and 48 hours to complete corrective action.

C. The Owner's NPDES Compliance Manager shall visit the site periodically.

D. If the Owner's Compliance Manager determines the site is out of compliance, the Contractor shall make corrective actions within 48 hours and produce any follow-up information requested by the Compliance Manager within the number of days specified in the Compliance Manager's report.

3.07 STORAGE OF SOIL MATERIALS

A. Stockpile borrow soil materials and excavated satisfactory soil materials without intermixing. Place, grade, and shape stockpiles to drain surface water. Cover to prevent windblown dust.
   1. Stockpile soil materials away from edge of excavations. Do not store within drip line of remaining trees.
   2. Provide temporary cover for soil stockpiles if not active for more than 14 days.
   3. Provide perimeter protection (sediment fence, wattle, or as shown on the drawings) around stockpile to prevent sediment from leaving the area.

3.08 STORM DRAINAGE

A. Inlets: All inlets are to be provided with inlet protection as indicated on the drawings immediately upon construction.

B. Outlets: All storm drainage outlets must be stabilized (velocity dissipation) as shown on the drawings before discharge becomes operational.

END OF SECTION 015713

SECTION 01 71 23

FIELD ENGINEERING

PART 1 - GENERAL

1.01 SUMMARY

A. The Contractor shall provide construction stakeout sufficient to construct the proposed improvement in accordance with the approved construction plans.

B. All stakeout services shall be completed under the direct supervision of a Professional Land Surveyor licensed in the State where the project is located.

C. The Owner shall provide the following prior to the commencement of any stake-out services:
   1. Construction site drawings and associated electronic files.
   2. Copies of the topographic survey that the approved site plans have been based on. The topographic survey shall include at least one benchmark, which shall be used for vertical control; and,
   3. Copies of the boundary survey that the approved site plans have been based on. The boundary survey shall be closed and monumented/ironed. These monuments/irons shall be used for horizontal control related to the site boundary and the dimensional control plan.

D. Contractor shall verify existing grades prior to performing work under this section. If existing grades are at variance with the drawings, notify the Owner and receive instructions prior to proceeding. No additional compensation will be considered resulting from grade variances once site clearing has commenced.

PART 2 - PRODUCTS

2.01 MATERIALS

A. The Contractor/Surveyor shall supply all stakeout materials.

2.02 EQUIPMENT

A. The Contractor/Surveyor shall supply all equipment necessary to accomplish the work.

PART 3 - EXECUTION

3.01 PERFORMANCE STANDARDS

A. Building Layout
   1. Set a minimum of 4 building corners (to be the outer most building limits or as requested by the Contractor) with 2 (10 foot minimum) offsets per corner. A benchmark or a finished floor benchmark will be set within close proximity to the proposed building.

B. Building Pad/Limits Certification
   1. Grade elevations for the building limits (finished floor elevation) shall be provided at a 50 foot grid for subgrade acceptance, stone base acceptance, and prior to slab placement.

C. Detention/Retention Ponds and Storm Drainage
   1. The Contractor shall provide an as-built survey of all constructed detention/retention ponds and associated drainage structures prior to final acceptance, including a written certification verifying the constructed pond volume and inverts of the proposed drainage structures.

D. Curb Layout
   1. Stakes shall be located at a minimum of 25 feet and a maximum of 50 feet intervals and also at points of curvature, points of tangency, radius points, and transitions, high and low points, and deflections. Offsets will be at 4 feet from face of curb, elevations to top of curb, elevations of top of curb to be provided at this 4 foot offset.

E. Storm and Sanitary Manholes

   15 feet and 25 feet offset stakes in the same direction will be set from the centerline opening of structure lath. One offset stake will have an elevation to top of rim and inverts. Intermediate grade stakes to pipe invert elevation will be provided if needed. (Note: These stakes are not to conflict with piping.)

F. Catch Basins

1. Set a centerline of structure lath with 10 foot offset HUB along the face of curb on either side of the lath at face of curb. One offset stake will have an elevation to top of grate and inverts. (Note: These stakes are not to conflict with piping.)

G. Utility Layout
   1. Water – Stakes shall be located at 50 foot intervals along centerline of pipe and at deflections with no offsets. One 10 foot offset stake to the center of hydrant with a grade ring elevation will be provided;
   2. Lighting – Centerline of lighting structure with a 5 foot offset will be staked. Offset stake elevation will be to finished grade; and,
   3. Centerline of pipes will be staked with no offset.

H. Roadway Layout
   1. Grade stakes shall be located at centerline of roadway at 50 foot intervals, including point of curvature, point on curve, point of tangency, and points of vertical curves. Grades shall be at finished grade.

I. Wall Layout
   1. Stakes with 10 feet offset shall be provided at 50 feet intervals, deflections, beginning and end of wall. Additional stakes may be required, depending on wall height and conditions.

J. Limits of Disturbance
   1. Clearing limits shall be staked at 100 feet ± intervals and at all critical areas.

K. Grade Stakes
   1. Stakes will be provided at a 50 foot grid. Grade elevations shall be to finished grade.

3.02 CONTRACTOR VERIFICATION

A. Contractor will field verify the utility location, size and invert elevations at points of connection in area of conflict, prior to construction and protect them from damage.
   1. Finished subgrades shall be verified by the Contractor to ensure proper elevation and conditions for construction above subgrade;
   2. Protect subgrade from excessive construction traffic and wheel loading including concrete and dump trucks; and,

B. Notify Owner if it is necessary to destroy or remove control points and/or benchmarks due to construction. Contractor shall be responsible for the protection of benchmarks, including the cost for relocation as required.

C. Advise Owner of any discrepancies between plans and field layout.

3.03 QUALITY ASSURANCE

A. The survey crew shall discuss all layout procedures with the Contractor's supervisor prior to commencing work.

B. A survey crew daily report detailing that day's work, shall be completed and signed by the Contractor's supervisor at the end of that day's layout.

C. Copies of sketches, cut sheets, etc. shall be provided to the Contractor by the beginning of the next workday.

D. All costs related to re-staking due to construction or Contractors' work resulting in destruction or movement of stakes, shall be paid for by the Contractor and at no additional expense to the Owner.

E. Building dimensions shall be obtained only from the approved architectural/structural drawings. Dimensions are to be obtained only from the appropriate approved (engineering, architectural and structural) drawings. The surveyor shall report any conflicts to the Contractor and Owner.

END OF SECTION 017123

SECTION 024116

DEMOLITION

PART 1 - GENERAL

1.01 RELATED DOCUMENTS

A. Drawings and general provisions of the Contract, including General and Supplementary Conditions and Specification Sections *31 and 32*, apply to this Section.

1.02 SUMMARY

A. This Section includes the following:
   1. Demolition and removal of buildings and site improvements.
   2. Abandoning in place or removing below-grade construction.
   3. Disconnecting, capping or sealing, and abandoning in-place or removing site utilities.
   4. Salvaging items for reuse by Owner.

B. Related Sections include the following:
   1. Division 2 Section "Summary" for use of the premises and phasing requirements.
   2. Division 2 Section "Construction Progress Documentation" for preconstruction photographs taken before building demolition.
   3. Division 2 Section "Temporary Facilities and Controls" for temporary construction, protection facilities, and environmental-protection measures for building demolition operations.
   4. Division 2 Section "Construction Waste Management and Disposal" for recycling and disposal of nonhazardous demolition wastes and for removal and storage of refrigerant.
   5. Division 2 Sections for demolishing or relocating site plumbing items.
   6. Division 2 Sections for demolishing or relocating site electrical items.
   7. Division 2 Section "Site Clearing" for site clearing and removal of above- and below-grade site improvements not part of building demolition
   8. Division 2 Section “Erosion and Sediment Control” for stabilization and control of discharges from the site.

1.03 DEFINITIONS

A. Demolish: Completely remove and legally dispose of off-site.

B. Recycle: Recovery of demolition waste for subsequent processing in preparation for reuse.

C. Remove and Salvage: Carefully detach from existing construction, in a manner to prevent damage, and deliver to Owner. Include fasteners or brackets needed for reattachment elsewhere.

D. Existing to Remain: Existing items of construction that are not to be removed and that are not otherwise indicated to be removed, removed and salvaged, or recycled.

1.04 MATERIALS OWNERSHIP

A. Unless otherwise indicated, demolition waste becomes property of Contractor.

B. Historic items, relics, antiques, and similar objects including, but not limited to, cornerstones and their contents, commemorative plaques and tablets, and other items of interest or value to Owner that may be uncovered during demolition remain the property of Owner.
   1. Carefully salvage in a manner to prevent damage and promptly return to Owner.

1.05 SUBMITTALS

A. Qualification Data (when required by Owner or Authorities Having Jurisdiction):
   1. Demolition Firm
   2. Test Control Firm
   3. For Refrigerant Recovery Technician.
   4. Licensed Professional Providing Demolition Oversight.

B. Proposed Protection Measures: Submit informational report, including drawings, that indicates the measures proposed for protecting individuals and property. The drawing shall outline proposed methods for dust control, noise control and maintaining the surrounding streets and

buildings in a clean condition for both demolition operations and during debris removal. Indicate proposed locations and construction of barriers.

1. Adjacent Buildings: Detail special measures proposed to protect adjacent buildings to remain.

C. Schedule of Demolition Activities: Contractor to submit for review and approval a detailed schedule for all proposed work to the Owner with the bid package. Submission shall include:
   1. Detailed sequence of demolition work, with starting and ending dates for each activity.
   2. Step-by-step description of all aspects pertaining to the demolition and protection of existing structures, the surrounding community, labor forces, rubble material management and disposal
   3. Temporary interruption of utility services.
   4. Shutoff and capping or re-routing of utility services.

D. Traffic Control Plan: Contractor shall submit Traffic Control Plan with bid package complying with Division 32 Section 321321 “Traffic Control”

E. Utility Schedule:
   1. Contractor to submit to Owner and all affected utility/service companies a proposed schedule of coordination for all necessary utility/service shut-offs, capping and continuation of utility services as required in the contract bid package.
   2. Contractor to provide Owner with written confirmation for all utility or service companies serving the site that service has been terminated prior to capping, abandoning or removal of any utility and prior to commencement of building demolition.
   3. Contractor shall accurately locate and mark on the contract drawings the location of all underground utility and services that have been capped and those that are to remain within the contract area.

F. Permits:
   1. Prior to submission of a bid package, the Contractor shall investigate all permit requirements and include any cost for these requirements in the bid. Prior to the commencement of work, the Contractor shall obtain all necessary permits and certificates associated with utility disconnections, storage tank removals and building demolition work from any and all Federal, State or regulatory authorities having jurisdiction. The Contractor shall incur all fees and other requirements associated with all permits and certificates. Copies of all permits and certificates obtained including drawing and permit preparation, procurements, revisions and filing fees shall be borne by the Contractor.
   2. All permits and certificates shall be obtained by the Contractor prior to applying for and obtaining general demolition permits. The following permits and certificates shall be obtained by the Contractor if applicable:
      a. Plumbing permit for water shut-off
      b. Water shut-off certificate (original)
      c. Plumbing permit for sewer seal
      d. Building and/or Fire Department permit for underground storage tank removal
      e. Letters from Electric and Gas Utility companies and gas meter shut-offs
      f. Letters from Cable TV companies for cable disconnections and removals
      g. Certificate from Tax Office (taxes paid);
      h. Letter to adjacent Owners of proposed demolition with proof of receipt
      i. Exterminator Certificate
      j. Board of Health approval
      k. Soil Erosion and Sediment Control Permit
      l. Asbestos Abatement Permit
      m. Asbestos Abatement Completion
      n. Demolition Contractor’s License
      o. Any other permit or certificate required to perform the demolition work

G. Building Demolition Plans: Drawings indicating the following:
   1. Locations of temporary protection

H. Inventory: Submit a list of items to be removed and salvaged and deliver to Owner prior to start of demolition.

I. Pre-demolition Video: Show existing conditions of adjoining construction and site improvements, including finish surfaces that might be misconstrued as damage caused by building demolition

operations. Documentation to include condition of on-site and adjacent structures and features including but not limited to curbs, sidewalks, landscapes, pavements, utility structures at grade, light poles, telephone poles, fences, bollards, etc… Comply with Division 1 Section 013200 “Construction Progress Documentation” . Submit before the Work begins.

J. Landfill Records: Indicate receipt and acceptance of hazardous wastes by a landfill facility licensed to accept hazardous wastes. Contractor to provide written permission from property owner on whose property the demolition material is to be disposed. Copies of any agreements shall be furnished to the Owner prior to sending any materials from the demolition site.

K. Hazardous Materials: Contractor to deliver manifest or disposal tickets to Owner and Owner’s Engineer for each truck that exits and enters the project site. Manifests shall include:
   1. Date and time of departure from demolition site.
   2. Type of material removed from site and type of material brought to the site.
   3. Amount of material in tons.
   4. Truck ID number
   5. Final destination of excess material.
   6. Date and time of entry to the demolition material
   7. Date and time of entry to the demolition site.
   8. Amount of material
   9. Source of material brought on-site.

L. Statement of Refrigerant Recovery: Signed by refrigerant recovery technician responsible for recovering refrigerant, stating that all refrigerant that was present was recovered and that recovery was performed according to EPA regulations. Include name and address of technician and date refrigerant was recovered.

1.06 QUALITY ASSURANCE

A. Refrigerant Recovery Technician Qualifications: Certified by EPA-approved certification program.

B. Statement of Refrigerant Recovery: Statement shall be signed by refrigerant recovery technician responsible for recovering refrigerant, stating that all refrigerant present was recovered and recovery was performed according to EPA regulations. Include name, address and signature on statement along with the date refrigerant was recovered.

C. Regulatory Requirements: Comply with governing EPA notification regulations before beginning demolition. Comply with hauling and disposal regulations of authorities having jurisdiction.

D. Standards: Comply with ANSI A10.6 and NFPA 241.

E. Pre-demolition Conference: Conduct conference at Project site to comply with requirements in *Division 01 Section 013200 "Project Management and Coordination."*. Review methods and procedures related to building demolition including, but not limited to, the following:
   1. Inspect and discuss condition of construction to be demolished.
   2. Review structural load limitations of existing structures.
   3. Review and finalize building demolition schedule and verify availability of demolition personnel, equipment, and facilities needed to make progress and avoid delays.
   4. Review and finalize protection requirements.
   5. Review procedures for noise control and dust control.
   6. Review procedures for protection of adjacent buildings.
   7. Review items to be salvaged and returned to Owner.

F. Progress Meetings: Once demolition work has begun Contractor shall schedule, administer and attend regularly scheduled meetings. Contractor shall include selected subcontractors as necessary to attend Progress Meetings. Contractor to schedule time and frequency of meetings at Owner’s request to maintain optimum degree of communication between all parties involved.

1.07 PROJECT CONDITIONS

A. Buildings to be demolished will be vacated and their use discontinued before start of the Work.

B. Buildings immediately adjacent to demolition area will be occupied. Conduct building demolition so operations of occupied buildings will not be disrupted.
   1. Provide not less than 72 hours' notice of activities that will affect operations of adjacent occupied buildings.
   2. Maintain access to existing walkways, exits, and other facilities used by occupants of adjacent buildings.

a. Do not close or obstruct walkways, exits, or other facilities used by occupants of adjacent buildings without written permission from authorities having jurisdiction.

C. Owner assumes no responsibility for buildings and structures to be demolished.
   1. Conditions existing at time of inspection for bidding purpose will be maintained by Owner as far as practical.

D. Removal and Relocation of Existing Utilities/Structures: The Contractor shall be responsible for removal and/or relocation of existing utilities/structures, whether shown or not shown on the drawings, at locations where conflicts occur with proposed improvements at no additional cost to the owner.

E. Hazardous Materials: It is not expected that hazardous materials will be encountered in the Work unless otherwise indicated in the contract documents.
   1. If materials suspected of containing hazardous materials are encountered, do not disturb; immediately notify Owner. Hazardous materials will be removed by Owner under a separate contract.

F. On-site storage or sale of removed items or materials is not permitted.

1.08 COORDINATION

A. Arrange demolition schedule so as not to interfere with Owner's on-site operations or operations of adjacent occupied buildings.

PART 2 - PRODUCTS

2.01 The Contractor shall supply all materials as required for this work.

PART 3 - EXECUTION

3.01 EXAMINATION

A. Review Project Record Documents of existing construction provided by Owner. Owner does not guarantee that existing conditions are same as those indicated in Project Record Documents.

B. Inventory and record the condition of items to be removed and salvaged. Provide video of conditions that might be misconstrued as damage caused by salvage operations. Comply with *Division 01 Section 013200 "Construction Progress Documentation".*

C. Survey condition of existing building to determine whether removing any element might result in structural deficiency or unplanned collapse of any portion of structure or adjacent structures during building demolition operations. Correlate existing conditions with requirements indicated on drawings to help determine extent of work.

D. Verify that hazardous materials have been remediated before proceeding with building demolition operations.

E. Verify that all asbestos containing materials have been removed before proceeding with building demolition operations.

F. Verify all sediment control measures are in place per the Phase I Erosion and Sediment Control Plan and Division 31 Section 311100 "Erosion and Sediment Control" *(forthcoming Division 31 Section 311100)* and the Stormwater Pollution Prevention Plan.

3.02 PREPARATION

A. Refrigerant: Remove refrigerant from mechanical equipment according to 40 CFR 82 and regulations of authorities having jurisdiction before starting demolition.

B. Existing Utilities: Locate, identify, disconnect, and seal or cap off indicated utilities serving buildings and structures to be demolished.
   1. Arrange to shut off indicated utilities with utility companies.
   2. If removal, relocation, or abandonment of utility services will affect adjacent occupied buildings, then provide temporary utilities that bypass buildings and structures to be demolished and that maintain continuity of service to other buildings and structures as acceptable to Owner and authorities having jurisdiction.
   3. Cut off pipe or conduit a minimum of 24 inches (610 mm) below grade. Cap, valve, or plug and seal remaining portion of pipe or conduit after bypassing according to requirements of authorities having jurisdiction.

C. Existing Utilities: Refer to Divisions 22 and 26 Sections for shutting off, disconnecting, removing, and sealing or capping utilities. Do not start demolition work until utility disconnecting and sealing have been completed and verified in writing.

D. Temporary Shoring: Provide and maintain interior and exterior shoring, bracing, or structural support to preserve stability and prevent unexpected movement or collapse of construction being demolished.
   1. Strengthen or add new supports when required during progress of demolition.

E. Salvaged Items: Comply with the following:
   1. Clean salvaged items of dirt and demolition debris.
   2. Pack or crate items after cleaning. Identify contents of containers.
   3. When permitted by Owner items removed may be stored in protected storage location during demolition and returned in original locations after demolition operations are complete. Store items in a secure area until delivery to Owner.
   4. Transport items to storage area designated by Owner or as indicated on Drawings.
   5. Protect items from damage during transport and storage.

3.03 PROTECTION

A. Existing Facilities: Protect adjacent walkways, loading docks, building entries, and other building facilities during demolition operations. Maintain exits from existing buildings.

B. Existing Utilities: Maintain utility services to remain and protect from damage during demolition operations.
   1. Do not interrupt existing utilities serving adjacent occupied or operating facilities unless authorized in writing by Owner and authorities having jurisdiction.
   2. Provide temporary services during interruptions to existing utilities, as acceptable to Owner and authorities having jurisdiction.
      a. Provide at least 72 hours' notice to occupants of affected buildings if shutdown of service is required during changeover.

C. Temporary Protection: Erect temporary protection, such as walks, fences, railings, canopies, and covered passageways, where required by authorities having jurisdiction and as indicated. Comply with requirements in Division 01 Section 015000 "Temporary Facilities and Controls"
   1. Protect adjacent buildings and facilities from damage due to demolition activities.
   2. Protect existing site improvements, appurtenances, and landscaping to remain.
   3. Erect a plainly visible fence around drip line of individual trees or around perimeter drip line of groups of trees to remain.
   4. Provide temporary barricades and other protection required to prevent injury to people and damage to adjacent buildings and facilities to remain.
   5. Provide protection to ensure safe passage of people around building demolition area and to and from occupied portions of adjacent buildings and structures.
   6. Protect walls, windows, roofs, and other adjacent exterior construction that are to remain and that are exposed to building demolition operations.
   7. Erect and maintain dustproof partitions and temporary enclosures to limit dust, noise, and dirt migration to occupied portions of adjacent buildings.

D. Remove temporary barriers and protections where hazards no longer exist. Where open excavations or other hazardous conditions remain, leave temporary barriers and protections in place.

3.04 DEMOLITION, GENERAL

A. General: Demolish indicated existing buildings and site improvements completely as specifically identified on the construction drawings. Use methods required to complete the Work within limitations of governing regulations and as follows:
   1. Do not use cutting torches until work area is cleared of flammable materials. Maintain portable fire-suppression devices during flame-cutting operations.
   2. Maintain fire watch during and hours after flame cutting operations as required by authorities having jurisdiction.
   3. Maintain adequate ventilation when using cutting torches.

4. Locate building demolition equipment and remove debris and materials so as not to impose excessive loads on supporting walls, floors, or framing.

B. Engineering Surveys: During demolition, perform surveys to detect hazards that may result from building demolition activities.

C. Site Access and Temporary Controls: Conduct building demolition and debris-removal operations to ensure minimum interference with roads, streets, walks, walkways, and other adjacent occupied and used facilities.
   1. Do not close or obstruct streets, walks, walkways, or other adjacent occupied or used facilities without permission from Owner and authorities having jurisdiction. Provide alternate routes around closed or obstructed traffic ways if required by authorities having jurisdiction.
   2. Use water mist and other suitable methods to limit spread of dust and dirt. Comply with governing environmental-protection regulations. Do not use water when it may damage adjacent construction or create hazardous or objectionable conditions, such as ice, flooding, and pollution.

3.05 DEMOLITION BY MECHANICAL MEANS

A. Proceed with demolition of structural framing members systematically, from higher to lower level. Complete building demolition operations above each floor or tier before disturbing supporting members on the next lower level.

B. Remove debris from elevated portions of the building by chute, hoist, or other device that will convey debris to grade level in a controlled descent.
   1. Remove structural framing members and lower to ground by method suitable to minimize ground impact and dust generation.

C. Salvage: Items to be salvaged are indicated on Drawings**.**

D. Below-Grade Construction: Abandon foundation walls and other below-grade construction. Cut below-grade construction flush with grade.

E. Below-Grade Construction: Demolish foundation walls and other below-grade construction that are within footprint of new construction and extending 10 feet (3 m) outside footprint indicated for new construction. Abandon below-grade construction outside this area.
   1. Remove below-grade construction, including basements, foundation walls, and footings, to at least 24 inches (600 mm) below grade or as indicated on drawings or as required to eliminate conflict with new construction.

F. Existing Utilities: Abandon existing utilities and below-grade utility structures. Cut utilities flush with grade.

G. Existing Utilities: Demolish existing utilities and below-grade utility structures that are within 10 feet (3 m) outside footprint indicated for new construction. Abandon utilities outside this area.

1. Fill abandoned utility structures with satisfactory soil materials or recycled pulverized concrete and as indicated on the drawings or directed by Owner and according to backfill requirements in Division 31 Section312000 "Earth Moving"

3.06 DEMOLITION BY EXPLOSIVES

A. Explosives: Perform explosive demolition only as approved by Owner and according to governing regulations.

3.07 SITE RESTORATION

A. Below-Grade Areas: Rough grade below-grade areas ready for further excavation or new construction.

B. Below-Grade Areas: Completely fill below-grade areas and voids resulting from building demolition operations with satisfactory soil materials according to backfill requirements in Division 31 Section 312000"Earth Moving"

C. Site Grading: Uniformly rough grade area of demolished construction to a smooth surface, free from irregular surface changes. Provide a smooth transition between adjacent existing grades and new grades.

3.08 REPAIRS

A. Promptly repair damage to adjacent buildings caused by demolition operations.

B. Where repairs to existing surfaces are required, patch to produce surfaces suitable for new materials.
C. Restore exposed finishes of patched areas and extend restoration into adjacent construction in a manner that eliminates evidence of patching and refinishing.

3.09 DISPOSAL OF DEMOLISHED MATERIALS

A. Remove demolition waste materials from Project site and safely dispose of all items in accordance with applicable EPA, State and local authorities having jurisdiction and all codes and ordinances. *(See Division 01 Section "Construction Waste Management and Disposal" for recycling and disposal of demolition waste.)*
B. All recycling must be conducted in accordance with all currently applicable EPA, State and Local authorities having jurisdiction waste flow regulations. All recycling of demolition debris must be approved by Owner.
   1. Do not allow demolished materials to accumulate on-site.
   2. Remove and transport debris in a manner that will prevent spillage on adjacent surfaces and areas.
C. Do not burn demolished materials.

3.10 CLEANING

A. Clean adjacent structures and improvements of dust, dirt, and debris caused by building demolition operations. Return adjacent areas to condition existing before building demolition operations began.

END OF SECTION 024116

SECTION 31 10 00

SITE CLEARING

PART 1 - GENERAL

1.01 RELATED DOCUMENTS

A. Drawings and general provisions of the Contract, including General and Supplementary Conditions and all Specification Sections, apply to this Section.

1.02 SUMMARY

A. Section Includes:
   1. Protecting existing vegetation to remain.
   2. Removing existing vegetation.
   3. Clearing and grubbing.
   4. Stripping and stockpiling topsoil.
   5. Removing above- and below-grade site improvements.
   6. Disconnecting, capping or sealing, and removing site utilities abandoning site utilities in place.

B. Related Sections:
   1. Division 01 Section "Field Engineering" for temporary utility services, construction and support facilities, security and protection facilities
   2. Division 02 Section “Demolition" for demolition of buildings, structures, and site improvements.
   3. Division 01 Section “Erosion and Sediment Control”.
   4. Division 31 Section “Earth Moving”.

1.03 DEFINITIONS

A. Subsoil: All soil beneath the topsoil layer of the soil profile, and typified by the lack of organic matter and soil organisms.

B. Surface Soil: Soil that is present at the top layer of the existing soil profile at the Project site. In undisturbed areas, the surface soil is typically topsoil; but in disturbed areas such as urban environments, the surface soil can be subsoil.

C. Topsoil: Top layer of the soil profile consisting of existing native surface topsoil or existing in-place surface soil and is the zone where plant roots grow. Its appearance is generally friable, pervious, and black or a darker shade of brown, gray, or red than underlying subsoil; reasonably free of subsoil, clay lumps, gravel, and other objects more than 2 inches (50 mm) in diameter; and free of subsoil and weeds, roots, toxic materials, or other nonsoil materials.

D. Plant-Protection Zone: Area surrounding individual trees, groups of trees, shrubs, or other vegetation to be protected during construction, and indicated on Drawings.

E. Vegetation: Trees, shrubs, groundcovers, grass, and other plants.

1.04 MATERIAL OWNERSHIP

A. Except for stripped topsoil and other materials indicated to be stockpiled or otherwise remain Owner's property, cleared materials shall become Contractor's property and shall be removed from Project site.

1.05 SUBMITTALS

A. Existing Conditions: Documentation of existing trees and plantings, adjoining construction, and site improvements that establishes preconstruction conditions that might be misconstrued as damage caused by site clearing.
   1. Use sufficiently detailed photographs or include plans and notations to indicate specific wounds and damage conditions of each tree or other plants designated to remain.

B. Record Drawings: Identifying and accurately showing locations of capped utilities and other subsurface structural, electrical, and mechanical conditions.

1.06 QUALITY ASSURANCE

A. Pre-construction meeting: Discuss site clearing and vegetation protection at SWPPP Pre-construction meeting at project site or agreed-upon location prior to site clearing and grading.

1.07 PROJECT CONDITIONS

A. Traffic: Minimize interference with adjoining roads, streets, walks, and other adjacent occupied or used facilities during site-clearing operations.
   1. Do not close or obstruct streets, walks, or other adjacent occupied or used facilities without permission from Owner and authorities having jurisdiction.
   2. Provide alternate routes around closed or obstructed traffic ways if required by Owner or authorities having jurisdiction.

B. Improvements on Adjoining Property: Authority for performing site clearing indicated on property adjoining Owner's property will be obtained by Owner before award of Contract.
   1. Do not proceed with work on adjoining property until directed by Owner.
   2. All benchmarks and monuments shall be protected during construction. If disturbed or destroyed, they shall be replaced in original position by a licensed surveyor at the Contractor’s expense.
   3. Protect areas outside limits of disturbance from encroachment by construction personnel or equipment, regardless of property ownership. Access shall be by specific written permission or easement only.

C. Contractor shall verify existing grades prior to performing work under this section. If existing grades are at variance with the drawings, notify the Owner and receive instructions prior to proceeding. No additional compensation will be considered resulting from grade variances once site clearing has commenced.

D. Salvable Improvements: Carefully remove items indicated to be salvaged and store on Owner's premises where indicated.

E. Utility Locator Service: Notify utility locator service for area where Project is located before site clearing.

F. Do not commence site clearing operations until temporary sediment control, runoff control and other best management practices including plant protection measures are in place as shown on the Drawings and indicated in the Sequence of Construction.

G. The following practices are prohibited within protection zones:
   1. Storage of construction materials, debris, or excavated material.
   2. Parking vehicles or equipment.
   3. Foot traffic.
   4. Erection of sheds or structures.
   5. Impoundment of water.
   6. Excavation or other earthwork unless otherwise indicated.
   7. Attachment of signs to or wrapping materials around trees or plants unless otherwise indicated.

H. Do not direct vehicle or equipment exhaust towards protection zones.

I. Prohibit heat sources, flames, ignition sources, and smoking within or near protection zones.

J. Soil Stripping, Handling, and Stockpiling: Perform only when the topsoil is dry or slightly moist.

PART 2 - PRODUCTS

2.01 MATERIALS

A. Satisfactory Soil Material: Requirements for satisfactory soil material are specified in Division 31 Section "Earth Moving."
   1. Obtain approved borrow soil material off-site when satisfactory soil material is not available on-site. Borrow material must be obtained from a permitted site.

PART 3 - EXECUTION

3.01 PREPARATION

A. Protect and maintain benchmarks and survey control points from disturbance during construction.

B. Locate and clearly identify trees, shrubs, and other vegetation to remain or to be relocated. Flag each tree trunk at 54 inches (1372 mm) above the ground.
C. Protect existing site improvements to remain from damage during construction.
   1. Restore damaged improvements to their original condition, as acceptable to Owner.

3.02 TEMPORARY EROSION AND SEDIMENTATION CONTROL

A. Provide erosion and sediment control measures to prevent soil erosion and discharge of sediment and other pollutants to surface waters or airborne dust to adjacent properties and walkways, according to erosion and sediment control Drawings and requirements of authorities having jurisdiction.
B. Provide erosion and sediment control measures in accordance with Division 01 Section “Erosion and Sediment Control” , prior to any construction activity (including demolition).
C. At Final Stabilization, remove erosion and sedimentation controls and restore and stabilize areas disturbed during removal.

3.03 TREE AND PLANT PROTECTION

A. General: Protect existing trees and plants to remain or be relocated on-site according to work shown on the Construction Drawings. All trees and plants to remain shall be barricaded and protected during the construction process
   1. Tree Protection
      a. Erect and maintain a temporary fence directly below the drip line of individual trees or directly below the perimeter drip line of groups of trees to remain. Remove fence when construction is complete.
      b. Do not excavate, for any reason, within the area directly below the drip lines of trees, unless otherwise indicated.
      c. Where excavation for new construction is required within the drip line of trees, hand clear and excavate to minimize damage to root systems. Use narrow-tine spading forks, comb soil to expose roots, and cleanly cut roots as close to excavation as possible.
      d. Repair or replace trees and vegetation indicated to remain that are damaged by construction operations, in a manner approved by the Owner.
B. Limit of clearing is to be staked in accordance with Division 01 Section “Field Engineering”, and verified by Owner prior to removal of any trees.
C. All trees and plants not designated to remain within the area to be graded, shall be cut and the removal of stumps shall comply with Article 3.5 of this Section. Burning on site is not permitted, unless otherwise approved by the Owner and authorities having jurisdiction.
D. Repair or replace trees, shrubs, and other vegetation indicated to remain or be relocated that are damaged by construction operations, in a manner approved by Owner.

3.04 EXISTING UTILITIES

A. Locate, identify, disconnect, and seal or cap utilities indicated to be removed or abandoned in place.
   1. Arrange with utility companies to shut off indicated utilities.
B. Locate, identify, and disconnect utilities indicated to be abandoned in place.
C. Interrupting Existing Utilities: Do not interrupt utilities serving facilities occupied by Owner or others unless permitted under the following conditions and then only after arranging to provide temporary utility services according to requirements indicated:
   1. Notify Owner not less than seven calendar days in advance of proposed utility interruptions.
   2. Do not proceed with utility interruptions without Owner's written permission.
D. Excavate for and remove underground utilities indicated to be removed.

3.05 CLEARING AND GRUBBING

A. Remove obstructions, trees, shrubs, and other vegetation to permit installation of new construction.
   1. Do not remove trees, shrubs, grass, and other vegetation indicated to remain or to be relocated.
   2. Removal includes digging or grinding down stumps and remove roots, obstructions, and debris to a depth of 18 inches (450 mm) below exposed subgrade.

3. In areas outside the building limits where the depth of fill exceeds 8 feet in height, unless otherwise directed by the Owner, sound trees shall be cut at a height of not more than 6 inches above natural ground.
4. Use only hand methods for grubbing within protection zones.
5. Chip removed tree branches and stockpile in areas shown on the Drawings and as approved by Owner. Re-use material as indicated on the Drawings otherwise dispose of off-site.

B. Fill depressions caused by clearing and grubbing operations with satisfactory soil material unless further excavation or earthwork is indicated.
1. Place fill material in horizontal layers not exceeding a loose depth of 8 inches (200 mm), and compact each layer to a density equal to adjacent original ground, and in accordance with Division 31 Section “Earth Moving”.

3.06 TOPSOIL STRIPPING

A. Remove sod and grass before stripping topsoil.

B. Strip topsoil to the full depth encountered in areas indicated to be graded and in a manner to prevent intermingling with underlying subsoil or other waste materials.
1. Remove subsoil and nonsoil materials from topsoil, including clay lumps, gravel, and other objects more than 2 inches (50 mm) in diameter; trash, debris, weeds, roots, and other waste materials.

C. Stockpile sufficient topsoil material to facilitate seeding and landscaping. Stockpile topsoil away from edge of excavations without intermixing with subsoil. Grade and shape stockpiles to drain away from stockpile. Refer to Division 01 Section “Erosion and Sediment Control” or cover to prevent windblown dust and erosion by water.
1. Limit height of topsoil stockpiles to 72 inches (1800 mm).
2. Do not stockpile topsoil within tree protection zones.
3. Dispose of surplus soil material, unsuitable or excess topsoil, obstructions, demolished materials, and waste materials, including trash and debris, and in compliance with all regulations. Surplus topsoil is that which exceeds quantity indicated to be stockpiled or reused.
4. Stockpile surplus topsoil to allow for re-spreading deeper topsoil.

3.07 SITE IMPROVEMENTS

A. Remove existing above- and below-grade improvements as indicated and necessary to facilitate new construction.

3.08 DISPOSAL OF SURPLUS AND WASTE MATERIALS

A. Remove surplus soil material, unsuitable topsoil, obstructions, demolished materials, and waste materials including trash and debris, and legally dispose of them off Owner's property.

B. If indicated on the Drawings and/or in the Stormwater Pollution Prevention Plan separate recyclable materials produced during site clearing from other nonrecyclable materials. Store or stockpile without intermixing with other materials and transport them to recycling facilities. Do not interfere with other Project work.

END OF SECTION 311000

SECTION 31 20 00

EARTH MOVING

PART 1 - GENERAL

1.01 RELATED DOCUMENTS

A. Drawings and general provisions of the Contract, including General and Supplementary Conditions and all Specification Sections, apply to this Section.

1.02 SUMMARY

A. Section Includes:
   1. Cutting, proofrolling, filling, grading and preparing subgrades, required lines, dimensions, contours and elevations for proposed improvements including slabs-on-grade, walks, pavements, turf and grasses, and plants as shown and implied on the drawings or required by these specifications.
   2. Scarifying, compaction, moisture content conditioning and control, and removal of unsuitable materials to ensure proper preparation of areas for the proposed improvements.
   3. Excavating and backfilling for buildings and structures.
   4. Special construction procedures for the site recommended in the geotechnical report for preparation of building and pavement areas.
   5. Drainage course for concrete slabs-on-grade.
   6. Subbase course for concrete walks and pavements.
   7. Subbase course and base course for asphalt paving.
   8. Subsurface drainage backfill for walls and trenches.
   9. Excavating and backfilling trenches for utilities and pits for buried utility structures.

B. Related Sections:
   1. Division 01 Section "Field Engineering" for temporary controls, utilities, and support facilities; also for temporary site fencing if not in another Section.
   2. Division 31 Section "Earth Moving" for site stripping, grubbing, stripping and stockpiling topsoil, and removal of above- and below-grade improvements and utilities.
   3. Division 32 Section “Planting” for finish grading in turf and grass areas, including preparing and placing planting soil for turf areas.
   4. Division 32 Section “Planting” for finish grading in planting areas and tree and shrub pit excavation and planting.

1.03 UNIT PRICES

A. Work of this Section is affected by unit prices for earth moving specified in Division 01 Section "Unit Prices."

B.

C. Rock Measurement: Volume of rock actually removed, measured in original position, but not to exceed the following. Unit prices for rock excavation include replacement with approved materials.
   1. 24 inches (600 mm) outside of concrete forms other than at footings.
   2. 12 inches (300 mm) outside of concrete forms at footings. Additional depth may be required due to local codes or based on the geotechnical engineering study.
   3. Neat outside of minimum required dimensions of concrete cast against grade.
   4. Outside dimensions of concrete walls indicated to be cast against rock without forms or exterior waterproofing treatments.
   5. 6 inches (150 mm) beneath bottom of concrete slabs-on-grade.
   6. 12 inches (300 mm) beneath pipe invert elevation in trenches, and 12 inches (300 mm) wider than outside surface of either side of pipe or conduit. Removal of rock for trench excavation will be paid as part of the corresponding utility items unless stated elsewhere in the contract documents.

1.04 DEFINITIONS

A. Backfill: Soil material or controlled low-strength material used to fill an excavation.
   1. Initial Backfill: Backfill or bedding material backfill placed beside and over pipe in a trench, including haunches to support sides of pipe.
   2. Final Backfill: Backfill placed over initial backfill to fill a trench.

B. Base Course: Aggregate layer placed between the subbase course and hot-mix asphalt paving.

C. Bedding Course: Aggregate layer placed over the excavated subgrade in a trench before laying pipe.

D. Borrow Soil: Satisfactory soil imported from off-site for use as fill or backfill.

E. Drainage Course: Aggregate layer supporting the slab-on-grade that also minimizes upward capillary flow of pore water.

F. Excavation: Removal of material encountered above subgrade elevations and to lines and dimensions indicated.
   1. Classified Excavation: Classified excavation shall be defined as the excavation necessary to subgrade lines and grades as shown on the contract drawings, which shall be a lump sum bid. Any and all unsuitable material, undercut excavation, mass rock excavation, trench rock excavation, mechanical rock excavation and soil stabilization shall be paid in addition to the classified excavation lump sum bid, by unit prices measured in-place. In the event the Owner elects to change the lines and grades as shown on the contract drawings, unit process shall be used to increase or decrease the contract amount in accordance with the change.
   2. Unclassified Excavation: Unclassified excavation shall be defined as all material excavated to and below the lines and grades as shown on the contract drawings to provide a firm and unyielding subgrade, regardless of its nature or composition, which includes any and all on-site cut or fill, off-site import or export, topsoil removal, subgrade preparation, unsuitable material, undercut excavation, mass rock excavation, trench rock excavation, mechanical rock excavation, utility and storm drainage trench excavation, and soil stabilization. Unclassified excavation shall be a lump sum bid with a unit price per cubic yard for unclassified excavation. In the event the Owner elects to change the lines and grades as shown on the contract drawings, the unclassified excavation unit price shall be used to increase or decrease the contract amount in accordance with the change.
   3. Authorized Additional Excavation: Excavation below subgrade elevations or beyond indicated lines and dimensions as directed by Owner. Authorized additional excavation and replacement material will be paid for according to Contract provisions for unit prices.
   4. Bulk Excavation: Excavation more than 10 feet (3 m) in width and more than 30 feet (9 m) in length.
   5. Unauthorized Excavation: Excavation below subgrade elevations or beyond indicated lines and dimensions without direction by Owner. Unauthorized excavation, as well as remedial work directed by Owner, shall be without additional compensation.

G. Fill: Soil materials used to raise existing grades.
   1. If necessary, off-site fill (borrow) shall be obtained and provided by the Contractor. The Contractor is responsible for all permits and regulatory requirements associated with offsite borrow sources.

H. Geogrid: A biaxial polymeric grid formed by a regular network of integrally connected tensile elements with apertures of sufficient size to allow interlocking with surrounding soil, rock, or earth to function primarily as a reinforcement.

I. Minimum Average Roll Value (MARV): A value based on testing and determined in accordance with ASTM D4759-92.

J. Rock: Rock material in beds, ledges, unstratified masses, conglomerate deposits, and boulders of rock material that exceed 1 cu. yd. (0.76 cu. m) for bulk excavation or 3/4 cu. yd. (0.57 cu. m) for footing, trench, and pit excavation that cannot be removed by rock excavating equipment

equivalent to the following in size and performance ratings, without systematic drilling, ram hammering, ripping, or blasting, when permitted:

1. Excavation of Footings, Trenches, and Pits: Late-model, track-mounted hydraulic excavator; equipped with a 42-inch- (1065-mm-) wide, maximum, short-tip-radius rock bucket; rated at not less than 138-hp (103-kW) flywheel power with bucket-curling force of not less than 28,700 lbf (128 kN) and stick-crowd force of not less than 18,400 lbf (82 kN) with extra-long reach boom; measured according to SAE J-1179.
2. Bulk Excavation: Late-model, track-mounted loader; rated at not less than 230-hp (172-kW) flywheel power and developing a minimum of 47,992-lbf (213.3-kN) breakout force with a general-purpose bare bucket; measured according to SAE J-732.

K. Rock: Rock material in beds, ledges, un-stratified masses, conglomerate deposits, and boulders of rock material defined as:

1. General Excavation: Any material that cannot be excavated with a single-toothed ripper drawn by a crawler tractor having a minimum draw bar pull rated at not less than 71,000 lbs. (Caterpillar D9N or equivalent), and occupying an original volume of at least 2 cubic yards or more.
2. Trench Excavation: Any material that cannot be excavated with a backhoe having a break out force rated at not less than 44,000 lbs (Caterpillar 235D or equivalent), and occupying an original volume of at least 2 cubic yards.
3. Mechanical Excavation: Any material that must be excavated by a minimum 10,000 lb. mechanical hammer and occupying an original volume of at least 2 cubic yards.

L. Structures: Buildings, footings, foundations, retaining walls, slabs, tanks, curbs, mechanical and electrical appurtenances, or other man-made stationary features constructed above or below the ground surface.

M. Subbase Course: Aggregate layer placed between the subgrade and base course for hot-mix asphalt pavement, or aggregate layer placed between the subgrade and a cement concrete pavement or a cement concrete or hot-mix asphalt walk.

N. Subgrade: Uppermost surface of an excavation or the top surface of a fill or backfill immediately below subbase, drainage fill, drainage course, or topsoil materials.

O. Utilities: On-site underground pipes, conduits, ducts, and cables, as well as underground services within buildings.

1.05 SUBMITTALS

A. Product Data: For each type of the following manufactured products required:

1. Geotextiles.
2. Controlled low-strength material, including design mixture.
3. Geofoam.
4. Warning tapes.

B. Samples for Verification: For the following products, in sizes indicated below:

1. Geotextile and Geogrid: Submit product data sheet and certification from Manufacturer the product supplied meets the requirement of this section. Submit Manufacturer’s installation instructions and general recommendations.

C. Qualification Data: For qualified testing agency.

D. Construction Sequence

1. Within 10 days after award of the contract, the Contractor shall submit to the Owner, with his bid package, a schedule detailing the sequence and time of completion of all phases of work under this section.

E. Material Test Reports:

1. At least two (2) weeks in advance of importing material and for each borrow soil material proposed for fill and backfill, the Contractor shall notify the geotechnical engineer of the location of the borrow area. The geotechnical engineer shall furnish reports to the Owner and Contractor information as follows:
    a. Moisture and Density Relationship: ASTM D1557 or D698 as required by the project geotechnical engineering study.
    b. Mechanical Analysis: AASHTO T-88.
    c. Plasticity Index: ASTM D4318.

d. Classification according to ASTM D 2487.
e. 5 pound sample of each type of borrow material in an air tight container for the approval of the geotechnical engineer and Owner.
f. The name of each material supplier and specific type and source of each material. Any change in source or soil type throughout the project will require approval of the geotechnical engineer and Owner.

2. For Trench Excavation and Backfill: Contractor shall contact all utility companies and identify any requirements necessary for the construction of the Project. In addition provide:
   a. Contractor to provide written confirmation on the status of all utility construction approvals and requirements to the Owner at the time of the pre-construction conference or no later than 30 days following the project possession date.
   b. Submit a sample of each type of offsite fill and/or bedding material that is to be used in backfilling trenches.
3. For Aggregate Base Course: at least two weeks in advance of imported aggregate use, the Contractor shall submit the following laboratory test date, in conformance with the specified DOT aggregate materials:
   a. Particle Size Analysis: AASHTO T-88; and,
   b. Density: Modified Proctor Test (ASTM D1557)
   c. Name of aggregate base course material supplier and specific type and source of each material, including relevant DOT compaction or specifications. Any change in source or aggregate base course type throughout the job requires approval of the Owner and the geotechnical engineer.
   d. The geotechnical engineer shall prepare field reports that indicate compaction test location, elevation data, testing results and acceptability. The Owner and Contractor shall be provided with copies of reports within 24 hours of time test was performed.

F. Blasting plan approved by authorities having jurisdiction is to be provided to the Owner at least 14 calendar days prior to commencement of blasting. Blasting plan to include all Federal, State and local permits applicable to the blasting operation. Blasting will be performed in accordance with all applicable laws, regulations, ordinances and industry standards. Plan shall coordinate with grading contractor to insure appropriate safety procedures are followed including signage and signaling devices.

G. Blasting Contractor: All blasting to be performed by an insured, certified and licensed blasting Contractor. Proof of applicable insurance, license and certifications must be provided to the Owner at least 30 days prior to commencement of any blasting work. **Blasting Contractor shall carry the following insurance: Workers Compensation, Comprehensive General Liability, Broad Form Property Damage, Contractual Liability and Explosion, Collapse and Underground Hazard (naming the Owner as additionally insured).** Contractor must indemnify and hold harmless the Owner for all claims for damages arising from the blasting operation.

H. The Blasting Contractor shall furnish a seismic survey report from seismic survey agency. The report will show the number of holes drilled, depth of holes, the burden and spacing, the amount of powder per hole, pound of powder per delay, the delay pattern, seismograph locations, and chronograph locations. The Seismic survey shall provide seismograph recordation of each blast at all adjacent structures. All reports shall be forwarded to the Owner.

I. Contractor shall have the responsibility of furnishing a pre-blast survey of the surrounding area. Survey will include a one-quarter mile radius of the surrounding area.

J. The Contractor shall provide and maintain a post-blast report including the amount of material displaced by each blast, the amount of explosive utilized in each blast, and the number of shots detonated. This report will be forwarded to the Owner.

K. Pre-blast Photographs or Videotape: Show existing conditions of adjoining construction and site improvements, including finish surfaces, which might be misconstrued as damage caused by blasting operations. Submit before blasting begins.

1.06 QUALITY ASSURANCE

A. Blasting: Comply with applicable requirements in NFPA 495, "Explosive Materials Code," and prepare a blasting plan reporting the following:

1. Types of explosive and sizes of charge to be used in each area of rock removal, types of blasting mats, sequence of blasting operations, and procedures that will prevent damage to site improvements and structures on Project site and adjacent properties.
2. Seismographic monitoring during blasting operations.

B. Blasting Requirements;
1. Perform blasting only after receiving written approval from Owner and authorities having jurisdiction.
2. Provide heavy mats as necessary to minimize concussion. Handle, store and use explosives in accordance with the Manual of Accident Prevention in Construction by the Associated General Contractor's of America, Inc., 1978 edition.

C. Seismic Survey Agency: An independent testing agency, acceptable to authorities having jurisdiction, experienced in seismic surveys and blasting procedures to perform the following services:
1. Report types of explosive and sizes of charge to be used in each area of rock removal, types of blasting mats, sequence of blasting operations, and procedures that will prevent damage to site improvements and structures on Project site and adjacent properties.
2. Seismographic monitoring during blasting operations.

D. Contractor Qualifications: The Contractor shall provide at least one supervisory person who shall be present at all times during execution of the work and who is thoroughly familiar with the type of work being performed and its best methods for completion. This person shall have the authority to act on behalf of the Contractor.

E. Geotechnical Engineering Study (Soils Report)
1. The Owner employed a geotechnical engineer to investigate sub-surface soil conditions and make recommendations regarding site work construction procedures. Perform all work in accordance with the recommendations and requirements therein. If conflicts exist between the geotechnical engineering study and the construction drawings and specifications, the more stringent requirements shall apply.

F. Geotechnical Testing Agency Qualifications: A geotechnical engineer shall be familiar with the requirements of the geotechnical engineering study, selected and paid by the Owner, will be retained to perform construction inspection on site based on density testing, visual observation and judgment. These inspections shall not relieve the Contractor from his responsibility to complete the work in accordance with the drawings and specifications.
1. Qualified according to ASTM E 329 and ASTM D 3740 for testing indicated.
2. Provide one compaction test per Table 3.16C for each lift within the pavement area.
3. Provide construction inspection and testing on trench backfilling operations.
4. Provide visual field confirmation and density testing of subgrade preparation and fill placement procedures as part of the construction testing requirements. The Contractor shall be informed as soon as possible of test results.
5. Geotechnical engineer shall prepare field reports that indicate compaction test location, elevation data, testing results and acceptability. The Owner and Contractor shall be provided with written copies of the results within 24 hours of time test was performed.
6. All costs associated with required re-inspection due to failures shall be paid for by the Contractor at no additional expense to the Owner. The Owner reserves the right to direct any inspection that they deem necessary. Contractor shall provide free access to the site for inspection activities.

G. Pre-excavation Conference: Conduct conference at Project site.

H. Geogrid Pre-construction Conference: Contractor to arrange site meeting with material supplier, installer, Owner and Engineer prior to installation of geogrid. Owner and Engineer shall be notified at least seven (7) days prior to the meeting.

I. Project Record Documents: Contractor to accurately record actual locations of all subsurface utilities, structures and obstructions encountered. Accurately record any as-built variation from the construction drawings and specifications. The Contractor shall provide as-built drawings within 30 days of project completion.

1.07 PROJECT CONDITIONS

A. General: The Contractor shall be responsible for removal and/or relocation of existing utilities at locations where conflicts occur with proposed utility improvements whether shown or not shown on the drawings. Removal and/or relocation shall be at no additional cost to the Owner.

B. Traffic: Minimize interference with adjoining roads, streets, walks, and other adjacent occupied or used facilities during earth moving operations.
   1. Do not close or obstruct streets, walks, or other adjacent occupied or used facilities without permission from Owner and authorities having jurisdiction.
   2. Provide alternate routes around closed or obstructed traffic ways if required by Owner or authorities having jurisdiction.

C. Improvements on Adjoining Property: Authority for performing earth moving indicated on property adjoining Owner's property will be obtained by Owner before award of Contract.
   1. Do not proceed with work on adjoining property until directed by Owner.

D. Utility Locator Service: Notify utility locator service for area where Project is located before beginning earth moving operations.

E. Do not commence earth moving operations until temporary erosion- and sedimentation-control measures, specified in Division 2 Section "Temporary Facilities and Controls," Division 2 Section “Erosion and Sediment Control” and Division 2 Section "Site Clearing," are in place.

F. Do not commence earth moving operations until plant-protection measures specified in Division 2 Section "Temporary Tree and Plant Protection" are in place.

G. The following practices are prohibited within plant-protection zones (if indicated on the Drawings:
   1. Storage of construction materials, debris, or excavated material.
   2. Parking vehicles or equipment.
   3. Erection of sheds or structures.
   4. Impoundment of water.
   5. Excavation or other digging unless otherwise indicated.
   6. Attachment of signs to or wrapping materials around trees or plants unless otherwise indicated.

H. Do not direct vehicle or equipment exhaust towards protection zones.

I. Prohibit heat sources, flames, ignition sources, and smoking within or near protection zones.

PART 2 - PRODUCTS

2.01 SOIL MATERIALS

A. General: Obtain and provide borrow soil materials when sufficient satisfactory soil materials are not available from excavations.

B. Satisfactory Soils: Soil Classification Groups consistent with geotechnical report and according to ASTM D 2487; free of rock or gravel larger than 2 inches (50 mm) in any dimension, debris, waste, frozen materials, vegetation, and other deleterious matter.
   1. Soil materials used for fill shall be clean, well graded granular soil which is non-expansive and non-collapsible and shall have less than 20% by weight passing the #200 sieve. The portion passing the #200 sieve shall be non-plastic. Fill with fewer fines (less than #200) must be approved by the geotechnical engineer. Fill with more than 20% fines may be acceptable only if so indicated in the geotechnical engineering study.
   2. Prior to placement material used for fill shall not contain:
      a. Debris (other than crushed concrete and brick meeting the requirements in 2.1.B.3);
      b. Timber or railroad ties;
      c. Deleterious materials such as steel rails;
      d. Trash or hazardous materials.
      e. Hazardous materials, unsuitable and deleterious materials and debris shall be disposed of off-site in accordance with all applicable regulations.
   3. On-site Soils:
      a. On-site materials for use as fill shall consist of excavated soil from other portions of the site.

b. Contractor to use on-site soil judiciously to facilitate construction schedule including the use of the most readily compactable soil for fill in building areas and fill within 2 feet of pavement sub-grade.
c. Topsoil shall not be utilized as engineered fill.
d. Excavated material containing rock, stone or masonry debris smaller than 2 feet in its largest dimension may be mixed with suitable material and utilized inside the building limits up to 6 feet below proposed subgrade and up to 3 feet below proposed subgrade outside building limits.
e. Excavated material containing rock, stone or masonry debris smaller than 6 inches in the largest dimension may be mixed with suitable material and utilized inside the building limits up to 3 feet below proposed subgrade and up to 18 inches below proposed subgrade outside the building limits.
f. No material greater than 2 inches in its largest dimension may be utilized inside the building limits within 3 feet of the proposed subgrade or within 18 inches of proposed subgrade for all other areas.
g. No material greater than 1-1/2 inches in its largest dimension may be utilized as backfill for storm drainage or utility trenches.

4. Imported Borrow:
   a. Imported fill (borrow) shall meet the requirements of on-site soils and shall be free from all hazardous substances. Certification of compliance, and if requested, test results certifying compliance shall be furnished by the geotechnical engineer.
   b. The Owner reserves the right to test off-site borrow material for conformance with these specifications.

C. Unsatisfactory Soils: Soil identified by the geotechnical engineer according to ASTM D 2487.
   1. Unsatisfactory soils also include satisfactory soils not maintained within 2 percent of optimum moisture content at time of compaction.

D. Subbase Material: Naturally or artificially graded mixture of natural or crushed gravel, crushed stone, and natural or crushed sand; ASTM D 2940; with at least 90 percent passing a 1-1/2-inch (37.5-mm) sieve and not more than 12 percent passing a No. 200 (0.075-mm) sieve.

E. Base Course: Naturally or artificially graded mixture of natural or crushed gravel, crushed stone, and natural or crushed sand; ASTM D 2940; with at least 95 percent passing a 1-1/2-inch (37.5-mm) sieve and not more than 8 percent passing a No. 200 (0.075-mm) sieve. All aggregate shall meet the state department of transportation specifications for the state in which the project is located for gradation and other specified material requirements.

F. Recycled Concrete Aggregate Base Course: Recycled concrete aggregate may be approved by the Owner for use in lieu of aggregate base course specified under the following conditions:
   1. The gradation, plasticity, soundness, and abrasion requirements of the material shall meet the governing department of transportation specifications for recycled concrete aggregate or aggregate base course.
   2. The Contractor shall be required to submit a sieve analysis to the Owner for review and approval
   3. The recycled concrete aggregate shall not contain foreign materials, which includes reinforcing steel, wood, and other friable material.
   4. The Contractor shall obtain all required permits and report recycled materials usage as required by the regulatory authorities having jurisdiction.
   5. The Owner reserves the right to not approve use of the recycled concrete aggregate, for both pavement base structure and building pad construction. Approval of the use of recycled concrete aggregate shall only be authorized in writing by the Owner.

G. Recycled Bituminous Concrete Base Course: Bituminous concrete on the site shall be milled or removed prior to placing any fill. Bituminous concrete may be reused under and immediately below the pavement stone base course if so indicated and approved by the geotechnical engineer and Owner.

H. Engineered Fill: Naturally or artificially graded mixture of natural or crushed gravel, crushed stone, and natural or crushed sand; ASTM D 2940; with at least 90 percent passing a 1-1/2-inch (37.5-mm) sieve and not more than 12 percent passing a No. 200 (0.075-mm) sieve.

I. Bedding Materials: As shown on the drawings and specified on the trenching and bedding details and approved by the Owner and/or the geotechnical engineer.
   1. Bedding Course: Naturally or artificially graded mixture of natural or crushed gravel, crushed stone, and natural or crushed sand; ASTM D 2940; except with 100 percent passing a 1-inch (25-mm) sieve and not more than 8 percent passing a No. 200 (0.075-mm) sieve.
   2. Bedding Material: As specified on the trenching and bedding details and/or conforming to local codes. Where conflict exists, the more stringent code or specification shall apply.

J. Drainage Course: Narrowly graded mixture of washed crushed stone, or crushed or uncrushed gravel; ASTM D 448; coarse-aggregate grading Size 57; with 100 percent passing a 1-1/2-inch (37.5-mm) sieve and 0 to 5 percent passing a No. 8 (2.36-mm) sieve.

K. Filter Material: Narrowly graded mixture of natural or crushed gravel, or crushed stone and natural sand; ASTM D 448; coarse-aggregate grading Size 67; with 100 percent passing a 1-inch (25-mm) sieve and 0 to 5 percent passing a No. 4 (4.75-mm) sieve.

L. Sand: ASTM C 33; fine aggregate.

M. Impervious Fill: Clayey gravel and sand mixture capable of compacting to a dense state.

2.02 EQUIPMENT

A. Compactor for mass earthwork shall be minimum 5 ton static drum weight vibratory roller or 5 ton static drum weight sheep's footed compactor as appropriate for the type of soil material at the site or other compactor approved by the geotechnical engineer.

B. Compactor for trenches and where access or maneuverability is of limited use, a double drum walk behind roller or "jumping jack" tamper may be used.

2.03 GEOTEXTILES

A. Subsurface Drainage Geotextile: Nonwoven needle-punched geotextile, manufactured for subsurface drainage applications, made from polyolefins or polyesters; with elongation greater than 50 percent; complying with AASHTO M 288 and the following, measured per test methods referenced:
   1. Grab Tensile Strength: 157 lbf (700 N); ASTM D 4632.
   2. Sewn Seam Strength: 142 lbf (630 N); ASTM D 4632.
   3. Tear Strength: 56 lbf (250 N); ASTM D 4533.
   4. Puncture Strength: 56 lbf (250 N); ASTM D 4833.
   5. Apparent Opening Size: No. 60 (0.250-mm) sieve, maximum; ASTM D 4751.
   6. Permittivity: 0.2 per second, minimum; ASTM D 4491.
   7. UV Stability: 50 percent after 500 hours' exposure; ASTM D 4355.

B. Separation Geotextile: Woven geotextile fabric, manufactured for separation applications, made from polyolefins or polyesters; with elongation less than 50 percent; complying with AASHTO M 288 and the geotechnical report.

C. Structural Soil Reinforcement Geogrid: Shall be integrally formed and deployed as a single layer having the following characteristics (all are MARV values unless otherwise noted)

Property	Type 1	Type 2	Type 3	Type 4
Aperture Stability Modulus at 20 cm-kg	0.32 m-N/deg	.065 m-N/deg	.058 m-N/deg	0.75 m-N/deg
Rib Shape	Rectangular or Square	Rectangular or Square	Rectangular or Square	Rectangular or Square
Rib Thickness	.030 in (0.76 mm)	.045 in (1.14 mm)	.050 in (1.27 mm)	.070 in (1.78 mm)

Nominal Aperture Size	1 inch	1 inch	2 inches	1.25 inches
Junction efficiency	93%	93%	93%	93%
Flexural Rigidity	250k mg-cm	750k mg-cm	450k mg-cm	2000k mg-cm
Minimum True Initial Modulus in Use MD	17,140 lb/ft	27,240 lb/ft	24,000 lb/ft	34,270 lb/ft
CMD	27,240 lb/ft	44,550 lb/ft	34,270 lb/ft	42,840 lb/ft

2.04 CONTROLLED LOW-STRENGTH MATERIAL

A. Controlled Low-Strength Material: Self-compacting, flowable concrete material produced from the following:
   1. Portland Cement: ASTM C 150, Type per geotechnical report.
   2. Fly Ash: ASTM C 618, Class C or F.
   3. Normal-Weight Aggregate: ASTM C 33, 3/4-inch (19-mm) nominal maximum aggregate size.
   4. Foaming Agent: ASTM C 869.
   5. Water: ASTM C 94/C 94M.
   6. Air-Entraining Admixture: ASTM C 260.

B. Produce conventional-weight, controlled low-strength material with **80-psi (550-kPa)** compressive strength when tested according to ASTM C 495.

2.05 ACCESSORIES

A. Detectable Warning Tape: Acid- and alkali-resistant, polyethylene film warning tape manufactured for marking and identifying underground utilities, a minimum of 6 inches (150 mm) wide and 4 mils (0.1 mm) thick, continuously inscribed with a description of the utility, with metallic core encased in a protective jacket for corrosion protection, detectable by metal detector when tape is buried up to 30 inches (750 mm) deep; colored as follows:
   1. Red: Electric.
   2. Yellow: Gas, oil, steam, and dangerous materials.
   3. Orange: Telephone and other communications.
   4. Blue: Water systems.
   5. Green: Sewer systems.

PART 3 - EXECUTION

3.01 PREPARATION

A. Prior to bidding work within this Section, the Contractor shall become thoroughly familiar with the geotechnical engineering study, existing site conditions, and all portions of the work within this Section.

B. Do not perform any work required by this section prior to completion of all required inspections, tests and approvals.

C. Protect structures, utilities, sidewalks, pavements, and other facilities from damage caused by settlement, lateral movement, undermining, washout, and other hazards created by earth moving operations.

D. Protect and maintain benchmarks, property corners, monuments and other reference points from damage or displacement. If a marker must be removed or relocated it shall be performed by a licensed professional land surveyor at no additional cost to the Owner.

E. Notify utility companies to allow removal and/or relocation of any utilities that are in conflict with the proposed improvements. Locate, identify, protect and maintain in operating condition, existing utilities encountered during utility installation. Repair any damage to surface or subsurface improvements encountered or shown on the Drawings.

F. Set all lines, elevations, and grades for utility and drainage system work and maintain for the duration of the work.

G. Verify location, size, elevation, and other pertinent data required to make connections between existing utilities, drainage systems, and proposed construction indicated on the Drawings. Coordinate all building utility connection locations and elevations with architectural drawings.

H. When performing grading operations during periods of prolonged wet or dry conditions, provide adequate measures for surface drainage or ground water and moisture control of the soils (i.e. wetting or drying, scarify and disking) so as to place and compact the soil within the moisture content range of a few percentage points of its optimum water content. Any disturbed areas should be proof rolled at the end of each day.

I. Sloping, shoring, bracing, and fencing shall be installed in accordance with Federal OSHA requirements as well as the requirements of all regulatory authorities having jurisdiction.

J. Protect and maintain all erosion control, sediment control, and runoff control and materials management measures during earth moving operations. Refer to erosion and sediment control drawings for staging earthwork operations and for measures that must be implemented prior to the commencement of earthwork.

K. Protect subgrades and foundation soils from freezing temperatures and frost. Remove temporary protection before placing subsequent materials.

L. Remove from the site any material encountered during grading operation that in the opinion of the Owner or geotechnical engineer is unsuitable or undesirable for backfilling in pavement or building areas. Do not allow debris and unsuitable material to accumulate on-site. Dispose of excess materials from the site.

M. Any material exported or imported from or to the Project site shall be hauled from or to a site that has coverage under NPDES or a State Construction General Permit (or Individual Permit). Coverage may either be under a separate Notice, or included in coverage under the Project Notice. If the borrow or waste site has NPDES or State Construction General Permit coverage a copy of the Notice of Intent and Notice of Coverage (or equal) shall be placed in the SWPPP Ledger.

3.02 DEWATERING

A. Prevent surface water and ground water from entering excavations, from ponding on prepared subgrades, and from flooding Project site and surrounding area.

B. Install dewatering systems that will be required to construct the Project. Water pumped out of excavations shall be disposed of onsite, and will not be discharged to the municipal storm drainage system or to surface waters unless approval to do so has been documented in writing by the Contractor.

C. Protect subgrades from softening, undermining, washout, and damage by rain or water accumulation.

1. Reroute surface water runoff away from excavated areas. Do not allow water to accumulate in excavations. Do not use excavated trenches as temporary drainage ditches.

3.03 EXPLOSIVES

A. Explosives: Obtain written permission from authorities having jurisdiction before bringing explosives to Project site. Perform blasting by using explosives on Project site only after receiving written approval from the Owner. .

1. Perform blasting without damaging adjacent structures, property, or site improvements.
2. Perform blasting without weakening the bearing capacity of rock subgrade and with the least-practicable disturbance to rock to remain.
3. Handle, store and use explosives in accordance with the Manual of Accident Prevention in Construction by the Associated General Contractors of America, Inc., 1978 edition.
4. Obtain all required Federal, State and Local permits applicable to the blasting operations.

5. Coordinate with grading Contractor to insure appropriate safety procedures are followed including signage and signaling devices.
6. Drill and blast such that rock will be suitable for use on the site as fill per this specification.

3.04 EXCAVATION, GENERAL

A. General
1. The building limits shall be as identified on the construction drawings. The building subgrade shall be constructed to include a minimum of 10 feet beyond the building limits, or as directed by the Owner;
2. Structures include buildings, footings, foundations, retaining walls, embankment berms for storm water detention basins, slabs, tanks, curbs, mechanical and electrical appurtenances or other man-made stationary features constructed above or below the ground surface;
3. The building pad subgrade shall be prepared in strict accordance with the geotechnical engineering study and these specifications, whichever is more stringent; and,
4. The Contractor shall cut or fill to the proposed subgrade elevations based on finished grades and the pavement thicknesses as shown on the drawings. Subgrade elevations shall be constructed to within 0 to minus ½ inch of the proposed grades specified.

B. Unclassified Excavation: Excavate to subgrade elevations regardless of the character of surface and subsurface conditions encountered. Unclassified excavated materials may include rock, soil materials, and obstructions. No changes in the Contract Sum or the Contract Time will be authorized for rock excavation or removal of obstructions.
1. If excavated materials intended for fill and backfill include unsatisfactory soil materials and rock, replace with satisfactory soil materials.
2. Remove rock to lines and grades indicated to permit installation of permanent construction without exceeding the following dimensions:
   a. 24 inches (600 mm) outside of concrete forms other than at footings.
   b. 12 inches (300 mm) outside of concrete forms at footings.
   c. 6 inches (150 mm) outside of minimum required dimensions of concrete cast against grade.
   d. Outside dimensions of concrete walls indicated to be cast against rock without forms or exterior waterproofing treatments.
   e. 6 inches (150 mm) beneath bottom of concrete slabs-on-grade.
   f. 12 inches (300 mm) beneath pipe invert elevation in trenches, and 12 inches (300 mm) wider than outside surface of any pipe or conduit.

C. Classified Excavation: Excavate to subgrade elevations. Material to be excavated will be classified as earth and rock. Do not excavate rock until it has been classified and cross sectioned by Owner. The Contract Sum will be adjusted for rock excavation according to unit prices included in the Contract Documents. Changes in the Contract Time may be authorized for rock excavation.
1. Earth excavation includes excavating pavements and obstructions visible on surface; underground structures, utilities, and other items indicated to be removed; together with soil, boulders, and other materials not classified as rock or unauthorized excavation.
   a. Intermittent drilling; blasting, if permitted; ram hammering; or ripping of material not classified as rock excavation is earth excavation.
2. Rock excavation includes removal and disposal of rock. Remove rock to lines and subgrade elevations indicated to permit installation of permanent construction without exceeding the following dimensions:
   a. 24 inches (600 mm) outside of concrete forms other than at footings.
   b. 12 inches (300 mm) outside of concrete forms at footings.
   c. 6 inches (150 mm) outside of minimum required dimensions of concrete cast against grade.
   d. Outside dimensions of concrete walls indicated to be cast against rock without forms or exterior waterproofing treatments.
   e. 6 inches (150 mm) beneath bottom of concrete slabs-on-grade.
   f. 12 inches (300 mm) beneath pipe invert elevation in trenches, and 12 inches (300 mm) wider than outside surface of any conduit or pipe.

3.05 EXCAVATION FOR STRUCTURES

A. Where existing grades are above proposed subgrade elevation, excavate materials in the building areas to line and grade as shown in the drawings being careful not to over excavate beyond the elevations needed for building subgrades.
   1. Excavate organic soils from the building area. If approved by Owner, organic soil excavation material may be used in landscaped area.
   2. Excavated on-site soils which meet the requirements of the geotechnical engineer may be used as building area fill.
   3. Unsuitable material, such as wood or any other deleterious materials determined to be unsuitable by the geotechnical engineer for use as on-site fill shall be disposed of off-site in accordance with this specification.

B. Excavate to indicated elevations and dimensions within a tolerance of plus 0 to minus 1/2 inch (12 mm). If applicable, extend excavations a sufficient distance from structures for placing and removing concrete formwork, for installing services and other construction, and for inspections.
   1. Excavations for Footings and Foundations: Do not disturb bottom of excavation. Excavate by hand to final grade just before placing concrete reinforcement. Trim bottoms to required lines and grades to leave solid base to receive other work.
   2. Pile Foundations: Per geotechnical engineer.
   3. Excavation for Underground Tanks, Basins, and Mechanical or Electrical Utility Structures: Excavate to elevations and dimensions indicated within a tolerance of plus or minus 1 inch (25 mm). Do not disturb bottom of excavations intended as bearing surfaces.

C. Excavations at Edges of Tree- and Plant-Protection Zones:
   1. Excavate by hand to indicated lines, cross sections, elevations, and subgrades. Use narrow-tine spading forks to comb soil and expose roots. Do not break, tear, or chop exposed roots. Do not use mechanical equipment that rips, tears, or pulls roots.
   2. Cut and protect roots according to requirements in Division 01 Section "Temporary Tree and Plant Protection."

3.06 EXCAVATION FOR WALKS AND PAVEMENTS

A. Excavate surfaces under walks and pavements to indicated lines, cross sections, elevations, and subgrades.

3.07 EXCAVATION FOR UTILITY TRENCHES

A. Contact authorities having jurisdictions and utility companies before excavation begins.

B. Utility alignments are designed to avoid obstructions whenever possible. The Contractor shall immediately notify Owner if unanticipated significant obstructions are encountered during utility installation work.

C. Cut trench banks for safety and remove stones as necessary to avoid point-bearing. All trench excavation side walls shall be sloped, shored, sheeted, braced or otherwise supported by means of sufficient strength to protect the workers within in accordance with the applicable rules and regulations established by the Department of Labor, Occupational Safety and Health Administration (OSHA), and by local codes and regulations. Moveable trench boxes shall not be allowed for HDPE, CMP or spiral ribbed pipes larger than 18” when installed in a trench condition in accordance with current OSHA requirements.

D. Excavate trenches at proper width and depth for laying pipe, conduit or cable and in accordance with utility company and/or manufacturer requirements.
   1. Beyond building perimeter, excavate trenches to allow installation of top of pipe at line, grade and elevation as shown on the Drawings, or at minimum 12 inches below frost line.

E. All trench width requirements for pipe, conduit, or cable shall be the minimum practical width that will allow for proper compaction of backfill, comply with trench and bedding details, and satisfy all safety, municipal and utility company regulations. Excavate trenches to uniform widths to provide the necessary clearance on each side of pipe or conduit.

F. Trench Bottoms: Excavate and shape trench bottoms to provide uniform bearing and support of pipes and conduit. Shape subgrade to provide uniform bearing and support for each section of pipe at every point along the entire length except where necessary to excavate for bells, joints, and barrels of pipes and for joints, fittings, and bodies of conduits. Dig bell holes and depressions

for joints after trench bottom has been graded. Dig no deeper, longer, or wider than needed to make the joint connection properly. Remove projecting stones and sharp objects along trench subgrade.

1. Where foundation material is found to be of poor supporting value or of rock, the Owner's engineer may make minor adjustments in the location of the pipe to provide a more suitable foundation. Where this is not practical, the existing unsuitable material will be removed by undercutting to a depth directed by the geotechnical engineer and backfilling with suitable conditioning material consisting of crushed stone, gravel, or a combination of sand and crushed gravel as approved by the geotechnical engineer. Final selection of suitable conditioning material will be made by the geotechnical engineer.
2. Where foundation material is unacceptable and trench is over-excavated a suitable conditioning material or pipe bedding material will be used as specified by the geotechnical engineer. Bedding material is to be compacted at a minimum of 92% dry density as determined by ASTM D1557, Modified Proctor Test. Place bedding material as specified by geotechnical engineer and as shown on the trenching and bedding details on the Drawings.

G. Blasting: Contractor shall drill and blast so that the rock will be suitable for use on the site as fill. Rock size should not exceed 24 inches and have enough smaller size pieces to create fold free matrix when placed and compacted. Particle velocity from blasting shall not exceed 2 inches per second as measured by a chronograph.

H. Excavated Material: Stockpile excavated material suitable for backfilling in an orderly manner far enough from the trench to avoid overloading the excavation side wall. Remove unsuitable excavated materials from the site. Any abandoned structures, utilities, or debris discovered during construction shall be removed and disposed of, or capped.

I. Utility Installation Depths: Utility installation shall meet the following minimum pipe installation depths, or applicable codes and ordinances, measured from finished grade to the top of the pipe barrel:

1. Water Mains: 42 inches or 12 inches below the frost line whichever is deeper, or as specified on the plans.
2. Sanitary Sewer: As indicated on the drawings, or (36 inches to top of pipe barrel minimum).
3. Storm Drainage (Sewer): Elevations and grades as shown on the drawings, (24 inches minimum)
4. Electrical Conduits: 24 inches, or as required by NEC 300-5, NEC 710-36 codes, or the regulatory authority standard, or utility company standards whichever is deeper.
5. Telephone Conduits: 24 inches, or the regulatory authority standard, or utility company standards whichever is deeper.
6. Landscape Irrigation Piping: See Section 328400 .

J. Laterals: All utilities intended to connect to services within the building shall be extended from the building a distance of five feet in the direction of the utility service and at elevations to connect at those locations shown on the Drawings. All utility ends will be plugged and marked by a 2 inch by 4 inch piece of wood extending from the utility invert to 4 feet above final grade.

K. Trenches in Tree- and Plant-Protection Zones:

1. Hand-excavate to indicated lines cross sections, elevations, and subgrades. Use narrow-tine spading forks to comb soil and expose roots. Do not break, tear, or chop exposed roots. Do not use mechanical equipment that rips, tears, or pulls roots.
2. Do not cut main lateral roots or taproots; cut only smaller roots that interfere with installation of utilities.

3.08 UNDERCUT EXCAVATION

A. When approved by the Owner and recommended by the geotechnical engineer, the Contractor will be required to remove natural soil materials in areas where fills are to be placed where soil materials are determined to be undesirable. The Contractor shall be required to remove the undesirable material and backfill with approved material. The backfill material shall be compacted per Table 3.16.C.

B. At locations where undesirable material is shown on the drawings or identified in the geotechnical engineering study removal and replacement shall be per the drawings or as directed by the geotechnical engineer or Owner.

C. At locations where soil is wet the Contractor shall provide a “good faith” effort in drying and disking these areas prior to requesting approval for undercut excavation.
D. Where undercut excavation is required adjacent or beneath the location of a proposed drainage structure, undercut excavation and backfill shall extend a sufficient distance adjacent to the installation to prevent future operations from disturbing the completed drainage structure.
E. All material removed in the work of undercut excavation will be classified by the geotechnical engineer and Owner as either suitable for other use without excessive manipulation and utilized by the Contractor elsewhere in the work, or unsuitable for future use and disposed of by the Contractor as directed by the geotechnical engineer in accordance with 3.10.M of this specification.
F. The Contractor shall conduct undercut operations in such a way that the necessary measurements can be taken before any backfill is placed.
G. Backfill in undercut areas shall be placed as a continuous operation along with undercutting operation, or as recommended by the geotechnical engineer. No backfill material shall be placed in water or in wet conditions unless otherwise recommended by the geotechnical engineer and approved by the Owner.

3.09 SUBGRADE INSPECTION

A. Notify Owner when excavations have reached required subgrade.
B. If Owner determines that unsatisfactory soil is present, continue excavation and replace with compacted backfill or fill material as directed.
C. Proof-roll subgrade below the building slabs and pavements with a pneumatic-tired and loaded 10-wheel, tandem-axle dump truck weighing not less than 15 tons **(13.6 tonnes)** to identify soft pockets and areas of excess yielding. Do not proof-roll wet or saturated subgrades.
    1. Completely proof-roll subgrade in one direction**,** repeating proof-rolling in direction perpendicular to first direction. Limit vehicle speed to 3 mph (5 km/h).
    2. Excavate soft spots, unsatisfactory soils, and areas of excessive pumping or rutting, as determined by Owner, and replace with compacted backfill or fill as directed.
D. Authorized additional excavation and replacement material will be paid for according to Contract provisions.
E. Reconstruct subgrades damaged by freezing temperatures, frost, rain, accumulated water, or construction activities, as directed by Owner, without additional compensation.

3.10 UNAUTHORIZED EXCAVATION

A. Fill unauthorized excavation under foundations or wall footings by extending bottom elevation of concrete foundation or footing to excavation bottom, without altering top elevation. Lean concrete fill, with 28-day compressive strength of 2500 psi (17.2 MPa), may be used when recommended by the geotechnical engineer and approved by Owner.
    1. Fill unauthorized excavations under other construction, pipe, or conduit as directed by geotechnical engineer and approved by Owner.

3.11 STORAGE OF SOIL MATERIALS

A. Stockpile borrow soil materials and excavated satisfactory soil materials without intermixing. Place, grade, and shape stockpiles to drain surface water. Cover to prevent windblown dust.
    1. Stockpile soil materials away from edge of excavations. Do not store within drip line of remaining trees.
    2. Stockpiles shall be surrounded by perimeter sediment control measures and shall be covered with temporary measures to prevent erosion as soon as practical but no longer than 14 days after completion of the pile.

3.12 BACKFILL

A. Place and compact backfill in excavations promptly, but not before completing the following:
    1. Construction below finish grade including, where applicable, sub drainage, damp proofing, waterproofing, and perimeter insulation.
    2. Surveying locations of underground utilities for Record Documents.
    3. Testing and inspecting underground utilities.

4. Removing concrete formwork.
5. Removing trash and debris.
6. Removing temporary shoring and bracing, and sheeting.
7. Installing permanent or temporary horizontal bracing on horizontally supported walls.

B. Place backfill on subgrades free of mud, frost, snow, or ice.

3.13 UTILITY TRENCH BACKFILL

A. Place backfill on subgrades free of mud, frost, snow, or ice.

B. Place and compact bedding course on trench bottoms and where indicated. Shape bedding course to provide continuous support for bells, joints, and barrels of pipes and for joints, fittings, and bodies of conduits.

C. Trenches under Footings: Backfill trenches excavated under footings and within **1**8 inches (450 mm) of bottom of footings with satisfactory soil; fill with concrete to elevation of bottom of footings. Concrete is specified in Division 03 Section "Cast-in-Place Concrete"

D. Trenches under Roadways: If shown on the Drawings or specified by the geotechnical engineer provide support for piping or conduit less than 30 inches (750 mm) below surface of roadways.

E. Backfill voids with satisfactory soil while removing shoring and bracing.

F. Do not backfill over porous, wet, frozen or spongy subgrade surfaces.

G. Fill around pipes and conduit shall be placed and compacted in accordance with the trenching and bedding details shown on the Drawings. Place and compact initial backfill approved by the geotechnical engineer, to a height not to exceed 8 inches (200 mm) over the pipe or conduit.
   1. Select material shall be used as specified by trenching and bedding details and where required by the geotechnical engineer. Backfill is to be kept free of stones, frozen lumps, chunks of highly plastic clay or other objectionable material.
   2. Carefully compact initial backfill under pipe haunches and compact evenly up on both sides and along the full length of piping or conduit to avoid damage or displacement of piping or conduit. Coordinate backfilling with utilities testing.
   3. Grade and maintain backfill areas to minimize erosion or saturation will not damage pipe bed or backfill.
   4. Heavy equipment shall not be operated over any pipe until it has been properly backfilled with a minimum of 24 inches of cover. Where any part of the required cover is above the proposed finished grade, the Contractor shall place, maintain and finally remove such material at no cost to the Owner. Pipe which becomes misaligned, shows excessive settlement, or has been otherwise damaged by the Contractor's operations shall be removed and replaced by the Contractor at no cost to the Owner.

H. Place and compact final backfill of satisfactory soil to final subgrade elevation.

I. Install warning tape directly above utilities, 12 inches (300 mm) below finished grade, except 6 inches (150 mm) below subgrade under pavements and slabs.

3.14 SOIL FILL

A. Fill areas to contours and elevations shown on the Construction Drawings with materials deemed satisfactory, less the topsoil depth as specified in Section 329300.

B. Existing grades below building areas shall be leveled prior to fill placement. Contractor shall remove any existing lawn and topsoil in these areas prior to placement of any fill.

C. All existing grades below building areas shall be proofrolled and compacted per this specification.

D. Plow, scarify, bench, or break up sloped surfaces steeper than 1 vertical to 4 horizontal so fill material will bond with existing material.

E. Fill shall not be placed:
   1. In areas of standing water, frozen or thawing ground or in areas that have not been approved by the geotechnical engineer.
   2. During unfavorable weather conditions. When work is interrupted by heavy rains fill operations shall not be resumed until all saturated surface soils are returned to satisfactory moisture content as determined by the geotechnical engineer.

F. Place and compact fill material in layers (lifts):
   1. Layers shall be made smooth and free from ruts or indentations at the end of any work day when precipitation is forecasted too prevent saturation of surface fill material. Fill surfaces

shall be graded smooth to drain and sealed with a drum roller at the completion of each work day.

2. Layers (or lifts) shall not exceed 12 inches (300 mm) in depth and shall be compacted systematically to achieve at least 6 passes of the compactor. Larger layer thickness may be approved if broken rock is used and placed at least 6 feet (1.8 m) below grade.
3. Each layer shall be compacted to minimum densities listed in Table 3.16.C and as specified by the geotechnical engineer.

G. Layers (lifts) to required elevations as follows:
1. Under grass and planted areas, use satisfactory soil material.
2. Under walks and pavements, use satisfactory soil material.
3. Under steps and ramps, use engineered fill or fill material approved by geotechnical engineer.
4. Under building slabs, use engineered fill or fill material approved by geotechnical engineer.
5. Under footings and foundations, use engineered fill or fill material approved by geotechnical engineer.

H. Place soilfill on subgrades free of mud, frost, snow, or ice. Wet or saturated material shall be air dried as necessary to achieve field densities specified in this Section. Removal and replacement shall not occur without prior approval of Owner. Removal and replacement shall be used if necessary to facilitate the construction schedule.

I. Contractor shall adjust water content by aeration or adding water to achieve the required density. Assist drying by disking, harrowing or pulverizing until moisture content is reduced to achieve proper compaction and facilitate the construction schedule.

J. Contractor to remove areas of finished subgrade found to have insufficient compaction density of depth necessary and replace with suitable compacted fill as approved by the Owner. Surface subgrade after compaction shall be hard, uniform, smooth, and stable and true to grade and cross-section.

3.15 SOIL MOISTURE CONTROL

A. Uniformly moisten or aerate subgrade and each subsequent fill or backfill soil layer before compaction to within 2 percent of optimum moisture content.
1. Do not place backfill or fill soil material on surfaces that are muddy, frozen, or contain frost or ice.
2. Remove and replace, or scarify and air dry, otherwise satisfactory soil material that exceeds optimum moisture content by 2 percent and is too wet to compact to specified dry unit weight.

3.16 COMPACTION OF SOIL BACKFILLS AND FILLS

A. Place backfill and fill soil materials in layers not more than 12 inches (300 mm) in loose depth for material compacted by heavy compaction equipment, and not more than 4 inches (100 mm) in loose depth for material compacted by hand-operated tampers.

B. Place backfill and fill soil materials evenly on all sides of structures to required elevations, and uniformly along the full length of each structure.

C. Compact soil materials to not less than the following percentages of maximum dry unit weight according to **ASTM D 698** and **ASTM D 1557**. In areas to receive fill and at the final cut subgrade, proofroll and compact the exposed ground surface following clearing and grubbing and any required excavation with a minimum of 4 passes of an approved compactor and obtain at least the density required in the geotechnical engineering study and as indicated below:

TABLE 3.16.C

Location or Area	Standard Proctor Density ASTM D698 (AASHTO T 99)	Modified Proctor Density ASTM D1557 (AASHTO T 180)	Testing Frequency 1 per lift per
Structures and Walkways	95%	92%	20,000 sf
Retaining Walls	95%	92%	1,000 sf
Trenches	95%	92%	150 lf
Landscape or Unimproved Areas	92%	90%	20,000 sf
Building and Pavement Subgrades (Top 18 inches)	100%	95%	10,000 sf
Building and Pavement Subgrades (Below Top 18 inches)	95%	92%	15,000 sf
Out-Parcels (Below Top 18 inches)	95%	92%	20,000 sf

1. In addition to the above referenced table, proofrolling shall be completed in accordance with Section 3.17 Proofrolling.
2. Any soft areas exhibiting excessive weaving or unsatisfactory material identified during excavation, fill placement, compaction and proof testing shall be removed, replaced with suitable fill, and compacted as specified in Table 3.16.C above.
3. Prior to preparing subgrade in low lying areas perform the following:
   a. Drain standing water by gravity or with a pump. Water should not be discharged directly into a storm drain. Sediment laden water may only be discharged to an approved sediment control measure.
   b. After drainage is complete, remove organic debris, mud, debris and other unsuitable material using equipment and methods that will minimize disturbance to the underlying soils.
   c. Thoroughly compact subgrade as specified in Table 3.16.C.
   d. If proposed for fill, all muck, mud and other materials removed from the low area shall be dried on-site by spreading in thin layers for observation by Owner and geotechnical engineer. If after observation by Owner or geotechnical engineer the material is found to be unsuitable, it shall be removed from the site.

3.17 PROOFROLLING

A. The work covered by this subsection consists of furnishing and operating, proofrolling equipment at the direction of the Owner's representative and/or geotechnical engineer.

B. Proofrolling shall be under the observation of the owner's representative and/or the geotechnical engineer as described herein and under the following schedule:
   1. Immediately following the completion of excavation to proposed subgrades in cut areas, proofrolling shall be performed as specified; and,
   2. Immediately **prior to and following** stone base course placement, in pavement and building pad areas for final floor slab preparation, all subgrade and stone base shall be proofrolled. Any areas which deflect, rut or pump under the loaded construction equipment shall be

undercut and replaced with compacted fill material or stone base course as directed by the geotechnical engineer and approved by the Owner, at no additional cost to the Owner.

C. Proofrolling shall be completed with pneumatic tired and loaded 10 wheel tandem-axle dump truck weighing not less than 25 tons (22.6 tonnes) to identify soft pockets and areas of yielding. Other equipment may be used if approved by the geotechnical engineer. Do not proofroll wet or saturated subgrades.

D. Construction methods shall be as follows:
   1. After the subgrade or stone base course has been completed the subgrade or stone base course shall then be proofrolled. The coverage areas and methods will be identified by the geotechnical engineer.
   2. Completely proofroll subgrade in one direction unless otherwise directed by the Owner or geotechnical engineer.
   3. The equipment speed shall be limited to 3 mph (5km/h) such that the geotechnical engineer can comfortably and slowly walk along side the equipment.
   4. If necessary to take corrective action, such as but not limited to under drain installation, undercut and backfill of unsuitable material, and/or aeration of excessively wet materials in areas that have been proofrolled, see Section 3.8. These areas shall be proofrolled again following the completion of the necessary corrections. If the corrections are necessary due to the negligence of the Contractor, the corrective work and additional proofrolling shall be performed by the contractor at on cost to the Owner.
   5. The contractor shall protect all structural facilities on the project including but not limited to box culverts, pipe culverts, and utilities from damage by the proofrolling equipment.

3.18 GRADING

A. General: Shape to conform to the grades shown on the drawings. Uniformly grade areas to a smooth surface, free of irregular surface changes. Comply with compaction requirements and grade to cross sections, lines, and elevations indicated.
   1. Provide a smooth transition between adjacent existing grades and new grades.
   2. Cut out soft spots, fill low spots, and trim high spots to comply with required surface tolerances.

B. Site Rough Grading: Slope grades to direct water away from buildings and to prevent ponding. Finish subgrades to required elevations within the following tolerances:
   1. Turf or Unpaved Areas: Plus or minus 1 inch (25 mm).
   2. Walks: 0 to -1/2 inches (13 mm) of the proposed subgrade.
   3. Pavements: 0 to -1/2 inches (13 mm) of the proposed subgrade

C. Grading inside Building Lines: 0 to -1/2 inches (13 mm) of the proposed subgrade when tested with a 50-foot (15-m) grid across the Lowe's building pad/limits.

3.19 BUILDING PAD LIMITS AND PAVED AREA CERTIFICATIONS FOR GEOTECHNICAL ENGINEER AND LAND SURVEYOR

A. The building pad/limits and pave area subgrades shall be satisfactorily proofrolled.

B. The Developer and/or Contractor shall provide the Building Pad/Limits and Paved Area(s) Certification forms for subgrade and stone base. Forms shall be completed in full. Building pad limits and paved area subgrades shall be constructed in accordance with the Drawings and these Specifications. Construction staking methods shall be in accordance with these specifications.

C. Prior to completion of the building pad acceptance report, the Contractor and/or developer shall be required to address all subsurface recommendations identified in the geotechnical engineering study or by the geotechnical engineer retained by the owner.

D. The Owner will not take ownership of the building pad until the pad certification form is received and approved by the Owner. The Building Pad/Limits and Paved Area(s) Certification Forms are attached to this Section.

3.20 SUBSURFACE DRAINAGE

A. Subdrainage Pipe: Specified in Division 33 Section "Subdrainage."

B. Subsurface Drain: Place subsurface drainage geotextile around perimeter of sub drainage trench. Place a 6-inch (150-mm) course of filter material on subsurface drainage geotextile to

support sub drainage pipe. Encase sub drainage pipe in a minimum of 12 inches (300 mm) of filter material, placed in compacted layers 6 inches (150 mm) thick, and wrap in subsurface drainage geotextile, overlapping sides and ends at least 6 inches (150 mm).

1. Compact each filter material layer to 85 percent of maximum dry unit weight according to ASTM D 698.

C. Drainage Backfill: Place and compact filter material over subsurface drain, in width indicated, to within 12 inches (300 mm) of final subgrade, in compacted layers 6 inches (150 mm) thick. Overlay drainage backfill with one layer of subsurface drainage geotextile, overlapping sides and ends at least 6 inches (150 mm).

1. Compact each filter material layer if used to 85 percent of maximum dry unit weight according to ASTM D 698.

3.21 SUBBASE AND BASE COURSES UNDER PAVEMENTS AND WALKS

A. Place subbase course and base course on subgrades free of mud, frost, snow, or ice.

B. On prepared subgrade, place subbase course and base course under pavements and walks as follows:

1. If shown on the Drawings install geogrid reinforcement of base/subbase and/or subgrade improvements according to manufacturer's written instructions, overlapping sides and ends. Geogrid is to be laid at proper elevation and alignment as shown on the drawings. Granular fill placement over geogrid to be in lifts and compacted as directed to minimize development of wrinkles or movement. At minimum a lift of 6 inches must be placed over geogrid prior to operation of tracked vehicles. Rubber-tired equipment may pass over geogrid reinforcement at slow speeds (less than 10 mph) when integrally-formed geogrids are used. When woven, multilayered or welded-strip geogrids are used, rubber-tired equipment shall not be allowed to pass directly on the geogrid until minimum 6 inch base lift has been installed.
2. If shown on the Drawings install separation geotextile on prepared subgrade according to manufacturer's written instructions, overlapping sides and ends.
3. If subbase course is shown on the Drawings, place base course material over subbase course under hot-mix asphalt pavement.
4. Place in uniform loose depth and without segregation. All stone base delivered to the site shall be spread and rolled by the end of each day.
5. Shape subbase course and base course to required crown elevations and cross-slope grades.
6. Place subbase course and base course 8 inches (200 mm) or less in compacted thickness in a single layer.
7. Place subbase course and base course that exceeds 8 inches (200 mm) in compacted thickness in layers of equal thickness, with no compacted layer more than 6 inches (150 mm) thick or less than 4 inches (100 mm) thick.
8. Each layer of material shall have been sampled, tested, compacted, and approved prior to placing succeeding layers of subbase course, base course material or pavement.
9. Contractor shall utilize methods of handling, hauling, and placing which will minimize segregation and contamination. Aggregate which is contaminated with foreign materials shall be rejected and removed and replaced by the Contractor at no additional cost to the Owner.

C. Pavement Shoulders: Place shoulders along edges of subbase course and base course to prevent lateral movement. Construct shoulders, at least 12 inches (300 mm) wide, of satisfactory soil materials and compact simultaneously with each subbase and base layer to not less than 95 percent of maximum dry unit weight according to ASTM D 698.

D. Compaction:

1. Compact each layer of subbase course and/or base course at optimum moisture content to required grades, lines, cross sections, and thickness to not less than 98 percent of maximum dry unit weight according to Modified Proctor density ASTM D 1557.
2. Subbase course and base course shall be compacted at the optimum moisture content as determined by the geotechnical engineer and approved by the Owner. The Contractor shall dry or add moisture to materials when required to provide a uniformly compacted and acceptable subbase or base.

3. Final layer of material shall be shaped to conform to the lines, grades and typical sections as shown on the drawings or as established by the engineer. When compacted, the base course shall be smooth, hard, dense, unyielding, and well bonded.

E. Quality Control:
   1. Thickness of the base course shall be within a tolerance of plus or minus ½ inch of the required thickness as specified on the drawings for building pad and pavement areas.
   2. The elevation of the base course within the building limits shall be within a tolerance of 0 to ½ inch. All other areas shall be within a tolerance of plus or minus 0.10 feet.
   3. The Contractor shall be required to repair any areas which do not conform to this tolerance or specification. Any repairs required shall be at no cost to the Owner, and shall meet these specifications.
   4. The developer and/or Contractor shall provide Lowe's Building Pad/Limits and Paved Area(s) Certifications for stone base which are located at the end of this section.

3.22 DRAINAGE COURSE UNDER CONCRETE SLABS-ON-GRADE

A. Place drainage course on subgrades free of mud, frost, snow, or ice.

B. On prepared subgrade, place and compact drainage course under cast-in-place concrete slabs-on-grade as follows:
   1. Install sub drainage geotextile on prepared subgrade according to manufacturer's written instructions, overlapping sides and ends.
   2. Place drainage course 6 inches (150 mm) or less in compacted thickness in a single layer.
   3. Place drainage course that exceeds 6 inches (150 mm) in compacted thickness in layers of equal thickness, with no compacted layer more than 6 inches (150 mm) thick or less than 3 inches (75 mm) thick.

3.23 FIELD QUALITY CONTROL

A. Special Inspections: Owner will engage a qualified geotechnical engineer to perform the following special inspections:
   1. Determine prior to placement of fill that site has been prepared in compliance with requirements.
   2. Determine that fill material and maximum lift thickness comply with requirements.
   3. Determine, at the required frequency, that in-place density of compacted fill complies with requirements.

B. Testing Agency: Owner will engage a qualified geotechnical engineering testing agency to perform tests and inspections.

C. Allow testing agency to inspect and test subgrades and each fill or backfill layer. Proceed with subsequent earth moving only after test results for previously completed work comply with requirements.

D. Footing Subgrade: At footing subgrades, at least one test of each soil stratum will be performed to verify design bearing capacities. Subsequent verification and approval of other footing subgrades may be based on a visual comparison of subgrade with tested subgrade when approved by Owner.

E. Testing agency will test compaction of soils in place according to ASTM D 1556, ASTM D 2167, ASTM D 2922, and ASTM D 2937, as applicable. Tests will be performed at the locations and frequencies shown in Table 3.16.C:

F. When testing agency reports that subgrades, fills, or backfills have not achieved degree of compaction specified, scarify and moisten or aerate, or remove and replace soil materials to depth required; recompact and retest until specified compaction is obtained.

3.24 PROTECTION

A. Protecting Graded Areas: Protect newly graded areas from traffic, freezing, and erosion. Keep free of trash and debris.

B. Repair and reestablish grades to specified tolerances where completed or partially completed surfaces become eroded, rutted, settled, or where they lose compaction due to subsequent construction operations or weather conditions.

1. Scarify or remove and replace soil material to depth as directed by Owner; reshape and recompact.

C. Where settling occurs before Project correction period elapses, remove finished surfacing, backfill with additional soil material, compact, and reconstruct surfacing.
   1. Restore appearance, quality, and condition of finished surfacing to match adjacent work, and eliminate evidence of restoration to greatest extent possible.
   2. Correction of subgrade after compaction shall be hard, uniform, smooth, and stable and true to grade and cross-section.

3.25 DISPOSAL OF SURPLUS AND WASTE MATERIALS

A. Remove surplus satisfactory soil and waste materials, including unsatisfactory soil, trash, and debris, and legally dispose of them off Owner's property.

B. Transport surplus satisfactory soil to designated storage areas on Owner's property. Stockpile or spread soil as directed by Owner.
   1. Remove waste materials, including unsatisfactory soil, trash, and debris, and legally dispose of them off Owner's property.

END OF SECTION 312000

BUILDING PAD/LIMITS CERTIFICATION FORM

Project	
Date	
Geotech. Engineer	
Surveyor	
Grading Contractor	
Const. Mgr.	

□ **SUBGRADE**

□ **STONE BASE**

GEOTECHNICAL ENGINEERING CERTIFICATION

I certify that the building pad/limits for the above referenced project, has been constructed in accordance with the Geotechnical Investigation prepared by _____ dated, _____, and Project Specifications, dated _____.

All earth cut and fills have been installed competently, properly and have been compacted under the supervision of the below certifying Geotechnical Engineer. The building pad/limits has been acceptably prepared to support the proposed construction. A final report containing a description of the grading work, on-site recommendations and the results of testing and inspections has been prepared and is dated _____.

Geotechnical Engineer (signature) _____ Date _____

Registration No._____ Expiration Date _____

Affix Seal Here (not valid unless sealed)

ELEVATION CERTIFICATION

I certify to the satisfactory completion of the grading for the building pad/limits in accordance with the approved drawings and specifications engineered by_____. All as-built subgrade elevations have been taken on a 50' grid across the Project building pad/limits and are within the tolerance of 0 to –1/2 inches of the proposed subgrade elevation as required by the Project Specifications.

Finished Floor Elevation _____ Date _____

Surveyor (signature) _____ Expiration Date _____

Registration No. _____ Affix Seal Here (not valid unless sealed)

GRADING CONTRACTOR VERIFICATION

I verify to the satisfactory completion of grading for the building pad/limits in accordance with the approved Grading Drawings and Project Specifications.

Contractor (signature) _____ Date _____

PAVED AREA(S) CERTIFICATION FORM

Project	
Date	
Geotech. Engineer	
Surveyor	
Grading Contractor	
Const. Mgr.	

☐ **SUBGRADE**

☐ **STONE BASE**

GEOTECHNICAL ENGINEERING CERTIFICATION

I certify that the paved area, located at _____, for the above referenced project, has been constructed in accordance with the Geotechnical Investigation prepared by _____ dated, _____, and Project Specifications, dated _____.

All earth cut and fills have been installed competently, properly and have been compacted under the supervision of the below certifying Geotechnical Engineer. The paved area has been acceptably prepared to support the proposed construction. A final report containing a description of the grading work, on-site recommendations and the results of testing and inspections has been prepared and is dated _____.

Geotechnical Engineer (signature) _____ Date _____

Registration No._____ Expiration Date _____

Affix Seal Here (not valid unless sealed)

ELEVATION CERTIFICATION

I certify to the satisfactory completion of the grading for the paved area in accordance with the approved drawings and specifications engineered by_____. All as-built subgrade elevations have been taken on a 50' grid across the paved areas and are within the tolerance of 0 to –1/2 inches of the proposed subgrade elevation as required by the Project Specifications.

Date _____

Surveyor (signature) _____ Expiration Date _____

Registration No. _____ Affix Seal Here (not valid unless sealed)

GRADING CONTRACTOR VERIFICATION

I verify to the satisfactory completion of grading for the paved areas in accordance with the approved Grading Drawings and Project Specifications.

Contractor (signature) _____ Date _____

SECTION 31 31 16

TERMITE CONTROL

PART 1- **GENERAL**

1.01 RELATED DOCUMENTS

A. Drawings and general provisions of the Contract, including General and Supplementary Conditions and all Specification Sections, apply to this Section.

1.02 SUMMARY

A. This Section includes the following for termite control:
   1. Soil treatment.

1.03 DEFINITIONS

A. EPA: Environmental Protection Agency.
B. PCO: Pest control operator.

1.04 SUBMITTALS

A. The General Contractor and the Sub-contractor must execute the provided Conformance Submittal for each product specified.
B. Soil Treatment Application Report: After application of termiticide is completed, submit report for Owner's record information, including the following as applicable:
   1. Date and time of application.
   2. Moisture content of soil before application.
   3. Brand name and manufacturer of termiticide.
   4. Quantity of undiluted termiticide used.
   5. Dilutions, methods, volumes, and rates of application used.
   6. Areas of application.
   7. Water source for application.
C. Warranties: Warranties specified in this Section.

1.05 QUALITY ASSURANCE

A. Applicator Qualifications: A PCO who is licensed according to regulations of authorities having jurisdiction to apply termite control treatment in jurisdiction where Project is located and who is experienced and has completed termite control treatment similar to that indicated for this Project and whose work has a record of successful in-service performance.
B. Applicator Qualifications: A PCO who is licensed according to regulations of authorities having jurisdiction to apply termite control treatment in jurisdiction where Project is located and who is an experienced installer who employs workers trained and approved by bait station system manufacturer to install manufacturer's products.
C. Regulatory Requirements: Formulate and apply termiticides, and label with a Federal registration number, to comply with EPA regulations and authorities having jurisdiction.

1.06 PROJECT CONDITIONS

A. Environmental Limitations: To ensure penetration, do not treat soil that is water saturated or frozen. Do not treat soil while precipitation is occurring. Comply with EPA-Registered Label requirements and requirements of authorities having jurisdiction.

1.07 COORDINATION

A. Coordinate soil treatment application with excavating, filling, and grading and concreting operations. Treat soil under footings, grade beams, and ground-supported slabs, before construction.

1.08 WARRANTY

A. General Warranty: The warranty specified in this Article shall not deprive Owner of other rights Owner may have under other provisions of the Contract Documents and shall be in addition to, and run concurrent with, other warranties made by Contractor under requirements of the Contract Documents.

B. Warranty: Written warranty for five years from date of Substantial Completion, signed by applicator and Contractor certifying that termite control work, consisting of applied soil termiticide treatment, will prevent infestation of subterranean termites. If subterranean termite activity or damage is discovered during warranty period, re-treat soil and repair or replace damage caused by termite infestation.

1.09 MAINTENANCE SERVICE

A. Continuing Service: Provide a proposal for continuing service, including monitoring, inspection, and retreatment for occurrences of termite activity, from applicator to Owner, in the form of a standard yearly (or other period) continuing service agreement, starting on the date of Substantial Completion. State services, obligations, conditions, and terms for agreement period and for future renewal options.

PART 2- **PRODUCTS**

2.01 SOIL TREATMENT

A. Termiticide: Provide an EPA-registered termiticide complying with requirements of authorities having jurisdiction, in a soluble or emulsible, concentrated formulation that dilutes with water or foaming agent, and formulated to prevent termite infestation. Use only soil treatment solutions that are not harmful to plants. Provide quantity required for application at the label volume and rate for the maximum termiticide concentration allowed for each specific use, according to the product's EPA-Registered Label.

B. Available Manufacturers: Subject to compliance with requirements, manufacturers offering products that may be incorporated into the Work include, but are not limited to, the following:

C. Manufacturers: Subject to compliance with requirements, provide products by one of the following:
   1. BASF Corporation.
   2. Bayer Corporation.
   3. Dow AgroSciences.
   4. FMC Corporation.
   5. Syngenta.

PART 3- **EXECUTION**

3.01 EXAMINATION

A. Examine substrates, areas, and conditions, with Applicator present, for compliance with requirements for moisture content of the soil, interfaces with earthwork, slab and foundation work, landscaping, and other conditions affecting performance of termite control. Proceed with application only after unsatisfactory conditions have been corrected.

3.02 PREPARATION

A. General: Comply with the most stringent requirements of authorities having jurisdiction and with manufacturer's written instructions for preparing substrate. Remove all extraneous sources of wood cellulose and other edible materials such as wood debris, tree stumps and roots, stakes, formwork, and construction waste wood from soil and around foundations.

B. Soil Treatment Preparation: Remove foreign matter and impermeable soil materials that could decrease treatment effectiveness on areas to be treated. Loosen, rake, and level soil to be treated, except previously compacted areas under slabs and footings. Termiticides may be applied before placing compacted fill under slabs if recommended by termiticide manufacturer.

C. Fit filling hose connected to water source at the site with a backflow preventer, complying with

requirements of authorities having jurisdiction.

3.03 APPLICATION, GENERAL

A. General: Comply with the most stringent requirements of authorities having jurisdiction and with manufacturer's EPA-Registered Label for products.

3.04 APPLYING SOIL TREATMENT

A. Application: Mix soil treatment termiticide solution to a uniform consistency. Provide quantity required for application at the label volume and rate for the maximum specified concentration of termiticide, according to manufacturer's EPA-Registered Label, to the following so that a continuous horizontal and vertical termiticidal barrier or treated zone is established around and under building construction. Distribute the treatment evenly.
   1. Slabs-on-Grade and Basement Slabs: Under ground-supported slab construction, including footings, building slabs, and attached slabs as an overall treatment. Treat soil materials before concrete footings and slabs are placed.
   2. Foundations: Adjacent soil including soil along entire inside perimeter of foundation walls, along both sides of interior partition walls, around plumbing pipes and electric conduit penetrating slab, and around interior column footers, piers, and along entire outside perimeter, from grade to bottom of footing. Avoid soil washout around footings.
   3. Penetrations: At expansion joints, control joints, and areas where slabs will be penetrated.

B. Avoid disturbance of treated soil after application. Keep off treated areas until completely dry.

C. Protect termiticide solution, dispersed in treated soils and fills, from being diluted until ground-supported slabs are installed. Use waterproof barrier according to EPA-Registered Label instructions.

D. Post warning signs in areas of application.

E. Reapply soil treatment solution to areas disturbed by subsequent excavation, grading, landscaping, or other construction activities following application.

END OF SECTION 313116

This Page Left Intentionally Blank

CONFORMANCE SUBMITTAL
Section 313116 – Termite Control

Project Location _____
(*City, State*)

General Contractor: _____
(*Company Name, Phone Number*)

_____
(*Address*)

Sub-Contractor: _____
(*Company Name, Phone Number*)

_____
(*Address*)

The following product has been selected (check one box) for use in this project from the list of acceptable products specified:

☐ BASF Corporation.

☐ Bayer Corporation.

☐ Dow AgroSciences.

☐ FMC Corporation.

☐ Syngenta.

I represent to the owner that the product selected will be installed in compliance with the applicable codes for the authorities having jurisdiction and in accordance with the project specification. If noncompliance is discovered the General Contractor shall make or cause to be made all necessary corrections to meet the applicable codes and specifications. Immediately or as directed by the owner, the work shall be completed without additional cost to the Owner and / or the contract.
General Contractor:

_____
(*Signature of the Authorized Agent of the General Contractor*)

_____
(*Print Name of the Authorized Agent of the General Contractor*)

I represent to the owner that the product selected will be installed in compliance with the applicable codes for the authorities having jurisdiction and in accordance with the project specification. If noncompliance is discovered the General Contractor shall make or cause to be made all necessary corrections to meet the applicable codes and specifications. Immediately or as directed by the owner, the work shall be completed without additional cost to the Owner and / or the contract.
Sub-Contractor:

_____
(*Signature of the Authorized Agent of the Sub-Contractor*)

_____
(*Print Name of the Authorized Agent of the Sub-Contractor*)

This Page Left Intentionally Blank

SECTION 32 12 16

ASPHALT PAVING

PART 1 - GENERAL

1.01 RELATED DOCUMENTS

A. Drawings and general provisions of the Contract, including General and Supplementary Conditions and all Specification Sections, apply to this Section.

1.02 SUMMARY

A. Section Includes:
   1. Cold milling of existing hot-mix asphalt pavement.
   2. Hot-mix asphalt patching.
   3. Hot-mix asphalt paving.
   4. Hot-mix asphalt paving overlay.
   5. Asphalt surface treatments.
   6. Pavement-marking paint.
   7. Imprinted asphalt.

B. Related Sections:
   1. Division 02 Section “Structure Demolition" for demolition, removal, and recycling of existing asphalt pavements, and for geotextiles that are not embedded within courses of asphalt paving.
   2. Division 31 Section "Earth Moving" for aggregate subbase and base courses and for aggregate pavement shoulders.
   3. Division 32 Sections for other paving installed as part of crosswalks in asphalt pavement areas.
   4. Division 32 Section "Concrete Paving Joint Sealants" for joint sealants and fillers at paving terminations.

1.03 REFERENCE STANDARDS

A. American Association of State Highway and Transportation Officials (AASHTO)
   1. M140 - Standard Specification for Emulsified Asphalt Nineteenth Edition; Revised Per Interim Specifications - Specifications - 1999 R(1998)
   2. M226 -Standard Specification for Viscosity Graded Asphalt Cement Nineteenth Edition R(1996)
   3. T245 - Standard Method of Test for Resistance to Plastic Flow of Bituminous Mixtures Using Marshall Apparatus Nineteenth Edition; ASTM D1559-76
   4. PP46-01 – Recommended Practice for Geosynthetic Reinforcement of the Aggregate Base Course of Flexible Pavement Structures, April 2001 Interim Edition of the AASHTO Provisional Standards.

B. American Society for Testing and Materials (ASTM)
   1. D1559 – Test Method for Resistance to Plastic Flow of Bituminous Mixtures Using Marshall Apparatus.
   2. D2041 - Standard Test Method for Theoretical Maximum Specific Gravity and Density of Bituminous Paving Mixtures
   3. D2171 – Standard Test Method for Viscosity of Asphalts by Vacuum Capillary Viscometer (RAP Asphalt Mixes)
   4. D1388-96 – Standard Test Method for Stiffness of Fabrics, Option A
   5. D3786 – Standard Test method for Hydraulic Bursting Strength of Knitted Goods and Nonwoven Fabrics
   6. D4355 – Test Method for Deterioration of Geotextiles from Exposure to Ultraviolet Light and Water
   7. D4439 – Terminology for Geotextiles
   8. D4873 – Guide for Identification, Storage, and Handling of Geotextiles
   9. D6637-01 – Standard Test Method for Determining Tensile Properties of Geogrids by the Single or Multi-rib Tensile Method

10. D4354-96 – Practice for Sampling of Geosynthetics for Testing
11. D4759-92 – Practice for Determining the Specification Conformance of Geosynthetics
12. D5818-95 – Practice for Obtaining Samples of Geosynthetics from a Test Section for Assessment of Installation Damage
13. ASTM D-140 Standard Practice for Sampling of Bituminous Materials
14. ASTM D-449 Asphalt Used in Damp-proofing and Waterproofing, Type II and III
15. ASTM D-2939 Standard Test Methods Emulsion Bitumen's Use as Protective Coatings
16. ASTM D-3405 Joint Sealant Hot-Applied for Concrete and Asphalt Pavement
17. ASTM D-3320 Emulsified Coal Tar Pitch (Mineral Colloid Type)
18. ASTM D-3910 Design, Testing and Construction of Slurry Seal

C. Asphalt Institute (AI)
1. MS-2 – Mix Design Method for Asphalt Concrete and Other Hot Mix Types
2. MS-22 – Principles of Construction of Hot-Mix Asphalt Pavement, Addendum

1.04 DEFINITIONS

A. Hot-Mix Asphalt Paving Terminology: Refer to ASTM D 8 for definitions of terms.

B. Geosynthetics:
1. Geogrid: A biaxial polymeric grid formed by a regular network of integrally connected tensile elements with apertures of sufficient size to allow interlocking with the surrounding soil, rock, or earth to function primarily as reinforcement.
2. Non-woven Geotextile: An interlayer (paving fabric) used above fatigued asphalt or binder layer and beneath asphalt pavement overlay to provide a permanent moisture barrier and to retard reflective cracking.
3. Woven Geogrid: A geogrid product formed by weaving discrete strips of polymer into a network. These geogrids usually require a protective coating to protect the polymer from premature degradation.
4. Welded Strip Geogrid: A geogrid product formed by heat bonding (welding) discrete strips of polymer into a network.
5. Average Roll Value: Minimum Average Roll Value (MARV) is property value calculated as typical minus two standard deviations.

1.05 SUBMITTALS

A. Product Data: Contractor to submit mix design using either of the two methods below for each pavement course and each type of product indicated. Mix design data submittal shall be submitted to the Owner for review and approval 45 days prior to schedule production and paving of the mix design.
1. "Marshal Stability": Marshal Stability design mix submittals shall include type and name of mix, gradation analysis, grade of asphalt cement, Marshall Stability in pounds flow, effective asphalt content in percent (%), and corresponding copies of covering State Department of Transportation material specifications or regulatory authorities having jurisdiction for each proposed material.
2. "Superpave": Superpave design mix submittals may be submitted in lieu of a "Marshall Stability" design mix, meeting the specifications of the governing State Department of Transportation or regulatory authorities having jurisdiction.

B. Material Certificates: Contractor shall submit product data statement (at end of this Section) stating that asphalt mix to be supplied complies with the specifications of the governing State Department of Transportation or regulatory authority having jurisdiction, as well as copies of the regulatory specifications corresponding to the asphalt mix formula and material. The Conformance Submittal shall be signed by the asphalt mix producer and the Contractor.

C. Samples for Verification: For the following products (if used on the project), in manufacturer's standard sizes unless otherwise indicated:
1. Each paving fabric, 12 by 12 inches (300 by 300 mm) minimum.
2. Each pattern and color of imprinted asphalt.

D. Cutting and Patching Proposal: Where asphalt cutting and patching is necessary to complete the work, the Contractor shall submit a proposal describing procedures to be followed at least 10 days prior to the time cutting and patching will be performed. The Contractor shall not proceed

with cutting and patching work until authorized by the Owner to proceed. The Cutting and Patching Proposal will include:

1. Extent of cutting and patching including how it will be performed and why it can not be avoided.
2. Changes to existing construction describing anticipated results including a description of any changes to structural elements, operating components, changes in building appearance and other significant visual elements.
3. List of products to be used and firms or entities that will perform the work.
4. Dates when cutting and patching will be performed.
5. List of utilities that will or could be affected, list of utilities that will be relocated, and a list of utilities that will be temporarily out of service. If existing utilities will be out of service provide length of time service will be disrupted.
6. Indicate if cutting and patching will involve adding reinforcement to structural elements and provide details necessary to integrate reinforcement with the original structure.
7. Owner's approval must be received prior to proceeding with the work. Owner approval does not waive its right to later require removal and replacement of unsatisfactory work.

E. Asphalt Seal Coat: Submit materials certificate to the Owner's engineer which is signed by the Contractor, certifying that materials comply with, or exceed the requirements herein.

F. Geotextiles:

1. Submit product data sheet and certification from the Manufacturer that the geotextile or geogrid product supplied meets the requirements of this Section. Manufacturer's certificate to include statement that furnished geotextile meets MARV requirements of the specification.
2. Manufacturing Quality Control test results shall be provided upon request.
3. Submit Manufacturer's installation instructions and general recommendations

G. Qualification Data: For qualified manufacturer and Installer.

1.06 QUALITY ASSURANCE

A. Manufacturer Qualifications: A paving-mix manufacturer registered with and approved by authorities having jurisdiction or the DOT of state in which Project is located.

B. Installer Qualifications: Imprinted-asphalt manufacturer's authorized installer who is trained and approved for installation of imprinted asphalt if required for this Project.

C. Comply with Asphalt Institute Manual MS-22, "Construction of Hot Mix Asphalt Pavements", unless more stringent requirements are indicated.

D. Geosynthetics:

1. Pre-Construction Conference: Prior to installation of any pavement overlay geotextile system, the Contractor shall arrange a meeting at the site with the geotextile material supplier and, where applicable the geotextile installer. The Owner and the Engineer shall be notified at least three days in advance of the time of the meeting. A representative of the supplier shall be available on an "as-needed" basis during construction.
2. Sampling and Testing: Sampling and testing to verify conformance with specification in accordance with ASTM D 4354.
3. Acceptance: Shall be in accordance with ASTM D 4759 based on testing of either conformance submittal using Procedure A of ASTM D 4354 or based on manufacturer's certifications and testing of quality control samples obtained using Procedure B of ASTM D 4354.
4. Sewn Seams (if required): Field sewn or factory sewn samples shall be submitted to Engineer for approval prior to installation. Submit 6 foot (2 meter) length of sewn seam for approval.

E. Testing Agency Qualifications: Qualified according to ASTM D 3666 for testing indicated.

F. Regulatory Requirements: Comply with materials, workmanship, and other applicable requirements of the regulatory authority having jurisdiction and State Department of Transportation for asphalt paving work.

G. Cutting and Patching: The Contractor shall perform all cutting, fitting or patching that may be required to complete the work or to make its several parts fit together properly. The Contractor shall not damage or endanger any portion of the work or the work of the Owner or any separate contractors by cutting, patching or otherwise altering any work, or by excavation. The contractor shall not cut or otherwise alter the work of the Owner or any separate contractor except with the

written consent of the Owner and the separate contractor. The Contractor shall not unreasonably withhold from the Owner or any separate contractor his consent to cutting or other altering the work.

H. Cutting and Patching: Cutting and patching activities shall not:
   1. Change load caring capacity or load-deflection ratio of structural elements
   2. Reduce the capacity of operational elements to perform as intended or increase required maintenance or decrease operational life or safety.
   3. Reduces the buildings aesthetic qualities (as determined by the Owner). Remove and replace construction that has been cut and patched in a visually unsatisfactory manner.
   4. If possible retain original installer or fabricator to cut and patch work described. If original installer or fabricator is not available, engage another recognized, experienced and specialized firm to do the work.

1.07 DELIVERY, STORAGE, AND HANDLING

A. Deliver pavement-marking materials to Project site in original packages with seals unbroken and bearing manufacturer's labels containing brand name and type of material, date of manufacture, and directions for storage.

B. Store pavement-marking materials in a clean, dry, protected location within temperature range required by manufacturer. Protect stored materials from direct sunlight.

C. Geotextiles:
   1. Labeling, shipment and storage shall follow ASTM D 4873.
   2. Product labels shall clearly show the manufacturer or supplier name, style name and roll number.
   3. Each shipping document shall include a notation certifying that the material is in accordance with the manufacturer’s certificate.
   4. Each geotextile roll shall be wrapped with a material that will protect the geotextile from damage to shipment, water, sunlight, and contaminates. Protective wrapping shall be maintained during shipment and storage. If wrapping is damaged prior to installation, outer wrap of geotextile shall be removed and discarded prior to installation.
   5. During storage rolls to be elevated above ground and adequately protected from construction damage, extended exposure to ultraviolet radiation, precipitation, chemicals, flames, sparks, temperatures below -20 deg C (-29 deg C) or in excess of 71 deg C (160 deg F) and any other environmental condition that might damage the product.

1.08 PROJECT CONDITIONS

A. Environmental Limitations: Do not apply asphalt materials if sub-grade is wet or excessively damp, during rainy weather, if rain is imminent or expected before time required for adequate cure, if the sub-grade or base course is frozen or if the air temperature, measured in the shade away from artificial heat at the location of the paving operations does not meet:
   1. Prime Coat: Minimum ambient temperature in the shade has been 40 degrees F for at least 12 hours immediately prior to application.
   2. Tack Coat: Minimum ambient temperature in the shade has been 40 degrees F for at least 12 hours immediately prior to application or minimum.
   3. Asphalt Base Course: Minimum surface temperature of 35 deg F and rising at time of placement.
   4. Asphalt Binder (Intermediate) Course: Minimum surface temperature of 40 deg F and rising at the time of placement.
   5. Asphalt Surface Course: Minimum surface temperature of 50 deg F (15.6 deg C) at time of placement.

B. Pavement-Marking Paint: Proceed with pavement marking only on clean, dry surfaces and at a minimum ambient or surface temperature of 40 deg F (4.4 deg C) for oil-based materials, and 55 deg F (12.8 deg C) for water-based materials, and not exceeding 95 deg F (35 deg C).

C. Imprinted Asphalt Paving (If Used on Project): Proceed with coating imprinted pavement only when air temperature is at least 50 deg F (10 deg C) and rising and will not drop below 50 deg F (10 deg C) within 8 hours of coating application. Proceed only if no precipitation is expected within two hours after applying the final layer of coating.

PART 2 - PRODUCTS

2.01 AGGREGATES

A. General: Use materials and gradations that have performed satisfactorily in previous installations.

B. Coarse Aggregate: ASTM D 692, sound; angular crushed stone, crushed gravel, or cured, crushed blast-furnace slag.

C. Fine Aggregate: AASHTO M 29, sharp-edged natural sand or sand prepared from stone, gravel, or combinations thereof.

2.02 ASPHALT MATERIALS

A. Asphalt Binder: AASHTO M 320 or AASHTO MP 1a, performance grade as specified by local authorities having jurisdiction or state department of transportation.

B. Asphalt Cement: Type and grade of asphalt cement for the paving mixture shall comply with the applicable requirements of AASHTO M 226, Table 2, and meeting governing DOT specifications.

C. Prime Coat: Emulsified asphalt applications shall meet the requirements of AASHTO M 140 and the governing DOT specifications.

D. Tack Coat: Emulsified asphalt applications shall meet the requirements of AASHTO M 140 and the governing DOT specifications.

E. Hot Mix Asphalt: Unless otherwise noted on the drawings, the design mix shall have the minimum stability base in accordance with AASHTO T245 or ASTM D 1559 and as specified by the State Department of Transportation in which the Project is located.

F. Reclaimed Asphalt Pavement (RAP): May be utilized as approved by the Owner. No more than 25% (total mixture) of RAP material shall be utilized in proposed mixes and shall meet the governing State Department of Transportation specifications. The origin of the RAP material shall be clearly identified to the owner prior to approval, including the RAP percentage identified in the pavement mix de4sign submittal. RAP material shall be free of contamination, including dirt, debris, concrete, clean stone, and other pollutants.

G. Water: Potable.

H. Undersealing Asphalt: ASTM D 3141, pumping consistency.

I. Asphalt Seal Coat Equipment:

1. Self-propelled squeegee equipment shall have at least two squeegee or brush devices (one behind the other) to assure adequate distribution and penetration of sealer into the bituminous pavement. Equipment shall have continuous agitation or mixing capabilities to maintain homogenous consistency of pavement sealer mixture throughout the application process.
2. Pressurized spray application equipment shall be capable of spraying pavement sealer with sand added. Equipment shall have continuous agitation or mixing capabilities to maintain homogenous consistency of pavement sealer mixture throughout the application process.
3. Hand squeegee and brushes shall be acceptable only in areas where practicality prohibits the use of mechanized equipment.

J. Asphalt Seal Coat: Shall be as per the requirement of the regulatory authority having jurisdiction or as approved by the Owner.

1. SealMaster Polymer Modified Coal Tar Sealer (PMCTS) with the following specifications:
   a. Material shall be homogeneous and show no separation or coagulation that cannot be overcome by moderate stirring.
   b. Non Volates: 40%
   c. Ash Non Volates: 35 - 40%
   d. Solubility of non Volitates in CS2%: 20 min.
   e. Specific Gravity: 25C – 1.18 Min.
   f. Drying Time: 8 hours max. (Typically less than 60 min.)
   g. Adhesion and Resistance to Water: No penetration or loss of adhesion
   h. Resistance to Heat: No blistering or sagging
   i. Flexibility: No cracking or flaking
   j. Resistance to Impact: No chipping, flaking or cracking
   k. Resistance to Volatilization: 10% loss in weight maximum
   l. Wet Film Continuity: Smooth non-granular free from course particles

2. Sealmaster Polymer Modified MasteSeal (PMM) to be used in AK, CA, AZ and NM only, with the following specifications:
    a. Material shall be homogeneous and show no separation or coagulation that cannot be overcome by moderate stirring.
    b. Non Volates: 43% - 47%
    c. Ash Non Volates: 42% - 52%
    d. Solubility of non Volitates in CS2%: 20 min.
    e. Specific Gravity: 25C – 1.15 – 1.25
    f. Drying Time: 8 hours max.
    g. Adhesion and Resistance to Water: No penetration or loss of adhesion
    h. Resistance to Heat: No blistering or sagging
    i. Flexibility: No cracking or flaking
    j. Resistance to Impact: No chipping, flaking or cracking
    k. Resistance to Volatilization: 10% loss in weight maximum
    l. Wet Film Continuity: Smooth non-granular free from course particles

3. Oil Spot Treatment: SealMaster PetroSeal or prep seal oil sot primer as specified by the manufacturer for pavement sealer.
4. Aggregate or sand as required and specified by the manufacturer.
5. Silica Sand: 400 meeting 40 to 60 fineness rating (AFS) .Black Beauty Slag Sand (with comparable sieve rating) may be substituted when silica sand is not available.
6. Polymer Additive (optional).
7. Fortifier
    a. Water based epoxy-latex additive, 3%, designed as a fortifier for refined coal tar emulsions to increase resistance to power steering marks, fuel and chemical effects and to assist in fast drying of the coating is acceptable.
    b. Thickeners are not permitted.

2.03 AUXILIARY MATERIALS

A. Herbicide: Commercial chemical for weed control, registered by the EPA. Provide in granular, liquid, or wettable powder form.

B. Sand: ASTM D 1073 or AASHTO M 29, Grade Nos. 2 or 3.

C. Paving Geotextile: AASHTO M 288, nonwoven polypropylene; resistant to chemical attack, rot, and mildew; and specifically designed for paving applications.
    1. Minimum Average Roll Values:
        a. Grab Tensile Strength: ASTM D 4632, Type I 90 lbs (400 N), Type II 120 lbs (530 N)
        b. Grab Elongation: ASTM D 4632, Type I & II 50%
        c. Mullen Burst: ASTM D 3786, Type I 180 psi (1240 kPa), Type II 230 psi (1580 kPa)
        d. Mass Per Unit Area: ASTM D 5261, Type I 3.6 oz/syd (122 g/sm), Type II 4.6 oz/syd (156 g/sm)
        e. Asphalt Retention: ASTM D 6140, Type I 0.20 gal/syd (.9 L/sqm), Type II 0.24 gal/syd (1.1 L/sqm)
        f. Melting Point: ASTM D 276 Type I & II 320 deg F (160 deg C)
        g. UV Resistance: ASTM D 4355, Type I & II 70% at 150 hours.
    2. Tack Coat: Sealant material used to impregnate and seal the geotextile as well as bond it to both the base pavement and overlay shall be a paving grade asphalt recommended by the geotextile manufacturer and approved by the Engineer. Emulsions that contain solvents shall not be used. The grade of asphalt cement specified for hot-mix design in each geographic location is generally the most acceptable material.

D. Joint Sealant: ASTM D 6690 or AASHTO M 324, Type I, hot-applied, single-component, polymer-modified bituminous sealant.

E. Pavement-Marking Paint: Alkyd-resin type, lead and chromate free, ready mixed, complying with AASHTO M 248.
    1. Color: White (on asphalt paving).
    2. Materials:

a. **Sherwin Williams Setfast Non- leaded Chlorinated Rubber -** White on asphalt (TM5126), yellow on concrete (TM5127), or as indicated on the drawing(s) is preferred.
b. **Sherwin Williams "Setfast Acrylic Waterborne Traffic Marking Paint"** – White on asphalt (TM226, yellow on concrete (TM225), or as indicated on the drawing(s)
c. **Valspar Enterprise Latex Traffic Marking Paint** - White on asphalt (#2540), yellow on concrete (#2541), or as indicated on the drawing(s).
d. **PPG (Pittsburg Paints)"SEEDHIDE® Traffic and Zone Marking Flat Latex" –** White on asphalt (11-23), yellow on concrete, or as indicated on the drawing(s).

3. Execution
   a. Proceed with pavement marking only on clean, dry surfaces and at a minimum ambient or surface temperature of 50 degrees F not exceeding 90 degrees F and relative humidity at a maximum of 85%.
   b. Surface shall be clean and free of dirt, grease, oil, or other contaminants which could interfere with adhesion.
   c. Apply paint material at manufacturer's recommended rates to provide a minimum wet film thickness of 15 mils and dry film thickness of 10 mils per coat.
   d. Paint to be applied in 2 coats using a template or striping machine. Stripes shall be a minimum width of 4 inches unless otherwise noted on the Drawings.
4. Temporary Pavement Markings
   a. Temporary paint shall be applied in accordance with permanent pavement marking specifications however only one (1) coat of paint shall be required. The contractor may use a temporary removable pavement marking tape only as approved in writing by the Owner. Tape that has become damaged and is no longer serviceable shall be replaced without additional compensation.
   b. All temporary markings shall be removed when no longer required. Any pavement area that has been determined to be damaged as a result of the removal operation shall be repaired at no additional cost to the Owner.
5. Pavement Marking Removal
   a. A motorized abrasive device shall be utilized to remove existing markings. Existing pavement marking lines and symbols that are to be removed shall be accomplished such that material or structural damage to the surface or texture of the pavement is avoided. The Contractor shall repair any damage to the pavement at no expense to the Owner. After removal, the pavement shall be in a condition that will not mislead or misdirect customers or motorists. Pavement marking removal within public rights of way shall be completed in accordance with the regulatory authority having jurisdiction and the Drawings and Specifications.

F. Wheel Stops: Precast, air-entrained concrete, 2500-psi (17.2-MPa) minimum compressive strength, 6 inches (150 mm) high by 6 inches (150 mm) wide by 72 inches (1800 mm) long. Provide chamfered corners, drainage slots on underside, and holes for anchoring to substrate.
   1. Dowels: Galvanized steel, 3/4-inch (19-mm) diameter, 12-inch (300-mm) minimum length. Or #4 bars 12-inch (300 mm) minimum.

2.04 IMPRINTED ASPHALT MATERIALS (When Used on the Project)

A. Templates: Imprinted-asphalt manufacturer's standard flexible templates for imprinting pattern into hot asphalt paving.
   1. Pattern: As indicated on the Drawings.

B. Coating System: Imprinted-asphalt manufacturer's standard system formulated for exterior application on asphalt paving surfaces.

2.05 MIXES

A. Hot-Mix Asphalt: Dense, hot-laid, hot-mix asphalt plant mixes as indicated on the Drawings and approved by authorities having jurisdiction and the State Department of Transportation where the project is located**;** designed according to procedures in AI MS-2, "Mix Design Methods for Asphalt Concrete and Other Hot-Mix Types";. and complying with the following requirements:
   1. Provide mixes with a history of satisfactory performance in geographical area where Project is located.

PART 3 - EXECUTION

3.01 EXAMINATION

A. Verify that subgrade is dry and in suitable condition to begin paving.

B. Proof-roll subgrade below pavements with heavy pneumatic-tired equipment to identify soft pockets and areas of excess yielding. Do not proof-roll wet or saturated subgrades.
   1. Completely proof-roll subgrade in one direction, repeating proof-rolling in direction perpendicular to first direction. Limit vehicle speed to 3 mph (5 km/h).
   2. Proof roll with a loaded 10-wheel, tandem-axle dump truck weighing not less than 15 tons (13.6 tonnes).
   3. Excavate soft spots, unsatisfactory soils, and areas of excessive pumping or rutting, as determined by Architect, and replace with compacted backfill or fill as directed.

C. Proceed with paving only after unsatisfactory conditions have been corrected.

D. Verify that utilities, traffic loop detectors, and other items requiring a cut and installation beneath the asphalt surface have been completed and that asphalt surface has been repaired flush with adjacent asphalt prior to beginning installation of imprinted asphalt.

E. Examine surfaces to be cut and patched and conditions under which cutting and patching are to be performed. Before patching, verify compatibility with and suitability of substrates, including compatibility with existing finishes or primers. Proceed with installation only after unsafe or unsatisfactory conditions have been corrected.

3.02 COLD MILLING

A. Clean existing pavement surface of loose and deleterious material immediately before cold milling. Remove existing asphalt pavement by cold milling to grades and cross sections indicated.
   1. Milling of existing asphalt pavement shall be at the depth and location as indicated on the Construction Drawings or as directed by the Owner.
   2. Mill to a uniform finished surface free of excessive gouges, grooves, and ridges. The milled pavement surface shall be thoroughly cleaned of all loose aggregate particles, dust, and other objectionable material by the use of power brooms, power blowers and power vacuums and other means.
   3. Control rate of milling to prevent tearing of existing asphalt course.
   4. Repair or replace curbs, manholes, and other construction damaged during cold milling. Contractor shall coordinate any adjustment of manholes, meter boxes, drainage inlets, valve boxes, and other utilities affected by the milling operations.
   5. Excavate and trim unbound-aggregate base course, if encountered, and keep material separate from milled hot-mix asphalt.
   6. All milled material shall become the property of the Contractor and shall be disposed of off-site or used in conformance with Section 312000) or for utilization as Reclaimed Asphalt Pavement in conformance with this specification and only as approved by the Owner.

3.03 CUTTING AND PATCHING

A. Preparation: Protect existing construction during cutting and patching to prevent damage. Provide protection from adverse weather conditions for portions of the Project that might be exposed during cutting and patching operations.

B. General: Employ skilled workers to perform cutting and patching. Proceed with cutting and patching at earliest feasible time, and complete without delay.

C. Cutting: Cut existing construction to provide for installation of other components or performance of other construction, and subsequently patch as required to restore surfaces to the original condition.
   1. Cut existing construction by sawing, drilling, breaking, chipping, grinding and similar operations, including excavation, using methods least likely to damage elements retained or adjoining construction. If possible, review proposed procedures with original installer and comply with original installer's written recommendations.
      a. In general, use hand or small power tools designed for sawing and grinding, not hammering and chopping. Cut holes and slots as small as possible, neatly to size

required, and with minimum disturbance of adjacent surfaces. Temporarily cover openings when not in use.

b. Existing Finished Surfaces: Cut or drill from the exposed or finished side into concealed surfaces.

c. Concrete and Masonry: Cut using a cutting machine, such as an abrasive saw or a diamond-core drill.

d. Excavating and Backfilling: Comply with requirements in applicable Specification Sections where required by cutting and patching operations.

e. Mechanical and Electrical Services: Cut off pipe or conduit in walls or partitions to be removed. Cap, valve, or plug and seal remaining portion of pipe or conduit to prevent entrance of moisture or other foreign matter after cutting.

f. Proceed with patching after construction operations requiring cutting are complete.

D. Patching: Patch construction by filling, repairing, refinishing, closing up, and similar operations following performance of the other Work. Patch with durable seams that are as invisible as possible. Provide materials and comply with installation requirements specified below:

E. Hot-Mix Asphalt Pavement: Saw cut perimeter of patch and excavate existing pavement section to sound base. Excavate rectangular or trapezoidal patches, extending 12 inches (300 mm) into adjacent sound pavement, unless otherwise indicated. Cut excavation faces vertically. Remove excavated material. Re-compact existing unbound-aggregate base course to form new sub-grade.

F. Surface Preparation: Immediately before placing asphalt materials, remove loose and deleterious material from substrate surfaces. Ensure that prepare substrate surface is ready to receive paving. Sweep loose granular particles from surface of un-bound aggregate base course.

G. Tack Coat: Apply uniformly to vertical surfaces abutting or projecting into new, hot-mix asphalt paving at a rate of 0.05 to 0.15 gal./sq. yd. (0.2 to 0.7 L/sq. m).

1. Allow tack coat to cure undisturbed before applying hot-mix asphalt paving.
2. Avoid smearing or staining adjoining surfaces, appurtenances, and surroundings. Remove spillages and clean affected surfaces.

H. Patching: Partially fill excavated pavements with hot-mix asphalt base mix and, while still hot, compact. Cover asphalt base course with compacted, hot-mix surface layer finished flush with adjacent surfaces. Restore exposed finished of patched areas and extend finish restoration into retained adjoining construction in a manner that will eliminate evidence of patching and refinishing.

3.04 REPAIRS

A. Leveling Course: Install and compact leveling course consisting of hot-mix asphalt surface course to level sags and fill depressions deeper than 1 inch (25 mm) in existing pavements.

1. Install leveling wedges in compacted lifts not exceeding 3 inches (75 mm) thick.

B. Crack and Joint Filling: Remove existing joint filler material from cracks or joints to a depth of 1/4 inch (6 mm).

1. Clean cracks and joints in existing hot-mix asphalt pavement.
2. Use emulsified-asphalt slurry to seal cracks and joints less than 1/4 inch (6 mm) wide. Fill flush with surface of existing pavement and remove excess.
3. Use hot-applied joint sealant to seal cracks and joints more than 1/4 inch (6 mm) wide. Fill flush with surface of existing pavement and remove excess.

3.05 SURFACE PREPARATION

A. General: Immediately before placing asphalt materials, remove loose and deleterious material from substrate surfaces by use of power blower or mechanical sweeping equipment.. Ensure that prepared sub-grade is ready to receive paving.

1. Surface hairline cracks up to ½ inch must be filled with crack filler; cracks larger than ½ inch must be cleaned and filled with elastomeric emulsion crack filler.
2. When using a high performance crack sealant, please note on proposal.
3. Potholes, alligator cracks, and similar surface defects must be cut out and repaired.

B. Prime Coat: Apply uniformly over surface of compacted unbound-aggregate base course at a rate of 0.20 gal./sq. yd. Apply enough material to penetrate and seal but not flood surface. Allow prime coat to cure.

1. If prime coat is not entirely absorbed within 24 hours after application, spread sand over surface to blot excess asphalt. Use enough sand to prevent pickup under traffic. Remove loose sand by sweeping before pavement is placed and after volatiles have evaporated.
2. Protect primed substrate from damage until ready to receive paving.

C. Tack Coat: Apply uniformly to surfaces of existing pavement at a rate of 0.05 to 0.15 gal./sq. yd. (0.2 to 0.7 L/sq. m).
1. Allow tack coat to cure undisturbed before applying hot-mix asphalt paving.
2. Avoid smearing or staining adjoining surfaces, appurtenances, and surroundings. Remove spillages and clean affected surfaces.
3. Adequate traffic control shall be provided to prohibit traffic from traversing applied area.

3.06 PAVING GEOTEXTILE INSTALLATION

A. Preparation:
1. Washed concrete sand may be spread over an asphalt-saturated geotextile to facilitate movement of equipment during construction or to prevent tearing or delaminating of the geotextile. Hot-mix broadcast in front of construction vehicle tires may also serve this purpose. If sand is applied, excess quantities shall be removed from the geotextile prior to placing the surface course.
2. Sand is not usually required. However, ambient temperatures are occasionally sufficiently height to cause bleed-through of the asphalt sealant resulting in undesirable geotextile adhesion to construction vehicle tires.
3. Neither the asphalt sealant nor the geotextile shall be placed when weather conditions, in the opinion of the Owner or Engineer are not suitable. Air and pavement temperatures shall be sufficient to allow the asphalt sealant to hold the geotextile in place. For asphalt cements air temperature shall be at least 10 deg C (50 deg F) and rising. For asphalt emulsions air temperature shall be 15 deg C (60 deg F) and rising.
4. The surface shall be free of dirt, water, vegetation or other debris.

B. Installation of Tack Coat:
1. Apply tack coat, asphalt binder, asphalt cement, as specified on the Drawings uniformly to existing pavement surfaces.
2. Rate of asphalt sealant application must be sufficient to satisfy the asphalt retention properties of the geotextile and bond the geotextile and overlay the pavement.
3. Application shall be by manufacturers recommendations. Minimum temperature shall be 150 deg C (300 deg F) and shall not exceed 160 deg C (320 deg F).
4. Target width of asphalt sealant application shall be the geotextile width plus 6 inches (150 mm). The asphalt sealant shall not be applied any farther in advance of geotextile placement than the distance the contractor can maintain free of traffic.

C. Installation of Geosynthetic (Paving Fabric):
1. Geotextile to be placed onto the asphalt sealant (calendared or smooth side up) with minimum wrinkling prior to the time the asphalt has cooled and lost tackiness. Upon approval of Engineer wrinkles or folds in excess of 1 inch (25 mm) shall be slit and laid flat.
2. Place paving geotextile promptly according to manufacturer's written instructions. Broom or roll geotextile smooth and free of wrinkles and folds.
3. Overlap longitudinal joints 4 inches (100 mm) and transverse joints 6 inches (150 mm). Transverse joints shall be lapped in direction of paving to prevent edge pickup by the paver. A second application of asphalt sealant to the geotextile overlap will be required if needed to ensure proper bonding of the double geotextile layer as directed by the Engineer.
4. Protect paving geotextile from traffic and other damage and place hot-mix asphalt paving overlay the same day.
5. Removal and replacement of geotextile that is damaged will be

D. Protection:
1. Traffic on the geotextile will be permitted for emergency and construction vehicles only.
2. Placement of the hot-mix overlay should closely follow geotextile installation.
3. Prior to placing a seal coat (or thin overlay such as an open-graded friction course), lightly sand the geotextile and a spread rate of 0.15 to 0.20 lb per square foot and pneumatically roll the geotextile tightly into the sealant.

3.07 HOT-MIX ASPHALT PLACING

A. Machine place hot-mix asphalt on prepared surface, spread uniformly, and strike off. Place asphalt mix by hand to areas inaccessible to equipment in a manner that prevents segregation of mix. Place each course to required grade, cross section, and thickness when compacted.
   1. Place hot-mix asphalt base course in number of lifts and thicknesses indicated.
   2. Place hot-mix asphalt surface course in single lift.
   3. Spread mix at minimum temperature of 250 deg F (121 deg C) and at maximum temperature of 325 deg F.
   4. Begin applying mix along centerline of crown for crowned sections and on high side of one-way slopes unless otherwise indicated.
   5. Regulate paver machine speed to obtain smooth, continuous surface free of pulls and tears in asphalt-paving mat.

B. Place paving in consecutive strips not less than 10 feet (3 m) wide unless infill edge strips of a lesser width are required.
   1. After first strip has been placed and rolled, place succeeding strips and extend rolling to overlap previous strips. Complete a section of asphalt base course before placing asphalt surface course.

C. Promptly correct surface irregularities in paving course behind paver. Use suitable hand tools to remove excess material forming high spots. Fill depressions with hot-mix asphalt to prevent segregation of mix; use suitable hand tools to smooth surface.

3.08 JOINTS

A. Construct joints to ensure a continuous bond between adjoining paving sections. Construct joints free of depressions, with same texture and smoothness as other sections of hot-mix asphalt course. Construct joints parallel to traffic flow.
   1. Clean contact surfaces and apply tack coat to joints.
   2. Offset longitudinal joints, in successive courses, a minimum of 6 inches (150 mm).
   3. Offset transverse joints, in successive courses, a minimum of 24 inches (600 mm).
   4. Construct transverse joints at each point where paver ends a day's work and resumes work at a subsequent time. Construct these joints using either "bulkhead" or "papered" method according to AI MS-22, for both "Ending a Lane" and "Resumption of Paving Operations." Or as shown on Drawings.
   5. Compact joints as soon as hot-mix asphalt will bear roller weight without excessive displacement.
   6. Compact asphalt at joints to a density within 2 percent of specified course density.

3.09 COMPACTION

A. General: Begin compaction as soon as placed hot-mix paving will bear roller weight without excessive displacement. Compact hot-mix paving with hot, hand tampers or with vibratory-plate compactors in areas inaccessible to rollers.
   1. Complete compaction before mix temperature cools to 185 deg F (85 deg C).

B. Breakdown Rolling: Complete breakdown or initial rolling immediately after rolling joints and outside edge. Examine surface immediately after breakdown rolling for indicated crown, grade, and smoothness. Correct laydown and rolling operations to comply with requirements.

C. Intermediate Rolling: Begin intermediate rolling immediately after breakdown rolling while hot-mix asphalt is still hot enough to achieve specified density. Continue rolling until hot-mix asphalt course has been uniformly compacted to the following density:
   1. Density: Compare density of in-place material against laboratory specimen of same mixture. Average density shall meet specifications and requirements of the State Department of Transportation in which the Project is located.
      a. Average Density: 95 percent of reference maximum theoretical density according to ASTM D 2041, for binder (intermediate) and surface courses.
      b. Average Density: 92 percent of reference maximum theoretical density according to ASTM D 2041, for base courses.

D. Finish Rolling: Finish roll paved surfaces to remove roller marks while hot-mix asphalt is still warm.

E. Edge Shaping: While surface is being compacted and finished, trim edges of pavement to proper alignment. Bevel edges while asphalt is still hot; compact thoroughly.
F. Repairs: Remove paved areas that are defective or contaminated with foreign materials and replace with fresh, hot-mix asphalt. Compact by rolling to specified density and surface smoothness.
G. Protection: After final rolling, do not permit vehicular traffic on pavement until it has cooled and hardened.
H. Erect barricades to protect paving from traffic until mixture has cooled enough not to become marked.

3.10 INSTALLATION TOLERANCES

A. Pavement Thickness: Compact each course to produce the thickness indicated within the following tolerances:
   1. Base Course: Plus or minus 1/4 inch (6 mm).
   2. Binder (Intermediate) Course: Plus or minus ¼ inch (6 mm)
   3. Surface Course: Plus or minus 1/8 inch (3 mm).
B. Pavement Surface Smoothness: Compact each course to produce a surface smoothness within the following tolerances as determined by using a 10-foot (3-m) straightedge applied transversely or longitudinally to paved areas:
   1. Base Course: 1/2 inch (12 mm).
   2. Binder (Intermediate) Course: ¼ inch (6 mm)
   3. Surface Course: 1/8 inch (3 mm**)**.
C. Testing: Contractors duties relating to testing include:
   1. Notify Owner 72 hours prior to asphalt paving
   2. Notify laboratory of conditions requiring testing
   3. Coordinate with laboratory for field testing.

3.11 SURFACE TREATMENTS

A. Application: Apply pavement sealer with ambient temperature is at least 50 degrees F and rising for a period of at least 24 hours after application. And subject to the following limitations:
   1. Do not apply when temperatures are expected to drop below 50 degrees F in a 24-hour period or if rain is expected or imminent within 8 hours
   2. Do not apply pavement sealer when ambient temperature is 90 degrees and above without first cooling the surface with a fine mist of water (fogging). The fogging should only dampen the surface without causing water pockets to form.
   3. Do not apply between September 15 and May 1 unless the specifications and requirements of the State Department of Transportation WEATHER LIMITATIONS in which the project is located permit application between these dates.
B. Surface Preparation:
   1. Surface must be free from dirt, dust and includes grass along the edges. Remove and dispose of any loose and unsuitable materials, dirt, and debris from pavement surface by power blower or mechanical sweeping equipment.
   2. Surface hairline cracks up to ½ inch must be filled with crack filler; cracks larger than ½ inch must be cleaned and filled with elastomeric emulsion crack filler.
   3. When using a high performance crack sealant, please note on your proposal.
   4. Potholes, alligator areas, and similar surface defects must be cut out and repairs made.
   5. Treat all grease, oil and gasoline spots with compatible primer of the manufactured coating. In hot weather, the surface should be fogged with water prior to sealing.
   6. Prior to spreading pavement sealer, paint all existing white paint stripes with black paint.
   7. Contractor to dispose of all cans bags and leftover materials off-site.
C. Application:
   1. Mix pavement sealer in accordance with the manufacturer's procedure to a uniform consistency before using. For each coat, the sealant shall be diluted with clean potable water while agitating. The percent of water to be added will be as per the manufacturer specification based on the asphalt surface quality, and the type of traffic it will experience. When the rubberized mixture has thickened, add sand or aggregate slowly to the mixing tank. Mix thoroughly before and slowly during the application.

a. First coat on all parking areas at a rate of .13 gallons per square yard/coat. At no time are total coats to exceed .051 gallons per square yard. The first coat may be applied by hand squeegee, self propelled squeegee equipment or pressurized spray equipment. Hand squeegee or self propelled squeegee equipment is preferred.
b. Second coat on all parking areas at a rate of .13 gallons per square yard/coat. At no time total coats are to exceed .051 gallons per square yard. The second coat must be applied with pressurized spray equipment.

2. Lines, stencils, and markings shall be repainted in original size & location, unless otherwise directed by the Owner, in accordance with this specification.
3. It is the Contractor's responsibility to check local zoning codes & regulations.
4. All seal coat and re-striping projects must be performed during available time periods (usually at night) that DO NOT interfere with normal store operations. Applications must be staged to provide customers free access to Lowe's the following business day.

3.12 WHEEL STOPS

A. Install wheel stops in bed of adhesive as recommended by manufacturer.
B. Securely attach wheel stops to pavement with not less than two galvanized-steel dowels embedded at one-quarter to one-third points. Securely install dowels into pavement and bond to wheel stop. Recess head of dowel beneath top of wheel stop.

3.13 IMPRINTING ASPHALT (when used on project)

A. General: Imprint asphalt according to manufacturer's written instructions, using manufacturer's recommended equipment.
B. Freshly Laid Asphalt: Immediately after asphalt has been laid and compacted but still plastic, begin the surface imprinting process.
   1. Monitor asphalt surface temperature in compliance with manufacturer's written recommendations to ensure required temperature to perform surface imprinting.
   2. Reheat asphalt if surface temperature drops below that required.
C. Reheating Asphalt: Soften asphalt pavement surface by heating to a depth of at least 1/2 inch (13 mm) without burning asphalt.
   1. Heat to a temperature of 300 to 325 deg F (149 to 163 deg C) immediately before applying templates.
   2. Regularly monitor the pavement temperature to prevent overheating.
   3. Direct flame heaters are not permitted.
   4. If pavement is overheated and begins to emit black smoke, remove damaged pavement by milling down 1 inch (25 mm) and replace removed pavement with new, compacted surface course prior to resuming imprinting work.
D. Surface Imprinting: Apply and imprint templates to a minimum depth as indicated on the Drawings and as required to embed precut marking material flush or barely beneath pavement surface.
E. Coating Application: After imprinted surface has cooled, apply according to Drawings and manufacturer's recommendations. Do not allow traffic until coating has completely dried and cured.
F. Precut Marking Material Application: Position precut marking material aligned with imprinted pattern and slowly heat to a temperature no higher than 325 deg F (163 deg C) until marking material begins to liquefy and flow. Do not allow traffic until installed marking material has cooled to ambient temperature.

3.14 FIELD QUALITY CONTROL

A. Testing Agency: Owner will engage a qualified independent testing and inspecting agency to perform tests, inspections and to prepare reports. Testing agency will be paid by Owner..
B. Thickness: In-place compacted thickness of hot-mix asphalt courses will be determined according to ASTM D 3549.
C. Surface Smoothness: Finished surface of each hot-mix asphalt course will be tested for compliance with smoothness tolerances.
D. In-Place Density: Testing agency will take samples of un-compacted paving mixtures and compacted pavement according to ASTM D 979 or AASHTO T 168.

1. Reference maximum theoretical density will be determined by averaging results from four samples of hot-mix asphalt-paving mixture delivered daily to site, prepared according to ASTM D 2041, and compacted according to job-mix specifications.
2. In-place density of compacted pavement will be determined by testing core samples according to ASTM D 1188 or ASTM D 2726.
    a. Two 4 inch core sample will be taken for every 5000 sq. yd. (836 sq. m) or less of intermediate course, at locations chosen by the Owner.
    b. The Owner shall provide random location field density testing of in-place compacted pavement determined by nuclear method according to ASTM D 2950 and correlated with ASTM D 1188 or ASTM D 2726.

E. Contractor to replace and compact hot-mix asphalt where core tests were taken.

F. The Owner reserves the right to take additional testing. Remove and replace or install additional hot-mix asphalt where test results or measurements indicate that it does not comply with specified requirements. All areas that do not comply with specified requirements shall be remedied by the Contractor as prescribed by the Owner.

3.15 DISPOSAL

A. Except for material indicated to be recycled, remove excavated materials from Project site and legally dispose of them in an EPA-approved landfill.
1. Do not allow milled materials to accumulate on-site. Perimeter protection shall be provided for milled material stockpiles temporarily stored on site where there is a potential for these materials to mix with stormwater and be discharged from the site.
2. Cleaning asphalt paving equipment and tools is not permitted on site.

END OF SECTION 321216

MARSHALL STABILITY
MIX DESIGN SUBMITTAL FORM

Project Location: _____
Type/Name of Mix: _____
AC Grade: _____
Reclaimed Asphalt Pavement (RAP) Mix: ڤ Yes _____% RAP or ڤ No

Gradation Limits	
Sieve Size	% Passing by Weight
Marshall Design Properties ڤ 50 Blow Method or ڤ 75 Blow Method	
Number of Blows, each end (___ inch specimen)	
Stability (lbs.)	
Flow (0.01 in.)	
Voids in Total Mix, VTM (%)	
Voids in Mineral Aggregate, VMA (%)	
Voids Filled with Asphalt, VFA (%)	
AC Content (%)	
Fines to Asphalt Ratio	

SUBMITTAL WILL BE REJECTED WITHOUT EACH OF THE FOLLOWING ATTACHED:

1. State Department of Transportation (DOT) or Authority Having Jurisdiction (AHJ) asphalt mix design specifications for each type of mix.
2. Material certificates stating the asphalt mix to be supplied complies with the specifications of the DOT or AHJ signed by the Asphalt Mix Producer and the Contractor.
3. Origin or RAP material if applicable.

SUPERPAVE
MIX DESIGN SUBMITTAL FORM

Project Location: _____
Type/Name of Mix: _____
Reclaimed Asphalt Pavement (RAP) Mix: ف Yes _____% Binder in RAP or ف No
Reclaimed Asphalt Shingle (RAS) Mix: ف Yes _____% Binder in RAS or ف No

Gradation Limits Mix Type (Nominal Maximum Aggregate Size)	
ف 9.5 mm ف 12.5 mm ف 19.0 mm ف 25.0 mm ف 37.5 mm	
Sieve Size	% Passing

Binder PG Grade	
No. Gyration N_{ini} /N_{des} /N_{max}	
Voids in Mineral Aggregate VMA (%)	
Voids in Total Mix VTM (%)	
Voids Filled with Asphalt VFA (%)	
%Gmm @ N_{ini}	
%Gmm @ N_{max}	
Dust to Binder Ratio ($P_{0.075}/P_{be}$)	

NOTE: Mix design must be performed in accordance with the Superpave mix design system as described in AASHTO PP 28.

SUBMITTAL WILL BE REJECTED WITHOUT EACH OF THE FOLLOWING ATTACHED:

1. State Department of Transportation (DOT) or Authority Having Jurisdiction (AHJ) asphalt mix design specifications for each type of mix.
2. Material certificates stating the asphalt mix to be supplied complies with the specifications of the DOT or AHJ signed by the Asphalt Mix Producer and the Contractor.
3. Origin or RAP/RAS material if applicable.

SECTION 32 12 36.13

ASPHALT SEAL AND FOG COAT

PART 1 - GENERAL

1.01 SUMMARY

A. Work under this section shall include cleaning and preparing the pavement surface, mixing the pavement sealer, and applying the asphalt pavement sealer over existing bituminous pavement surfaces.

B. Restriping parking lot markings for an existing parking lot for maintenance and repair application. Areas to receive parking lot markings are all areas within the property boundary.

1.02 REFERENCED SECTIONS

A. Section 321216 - Asphalt Paving

B. Section 321313- Concrete Pavement Curb and Sidewalk

1.03 REFERENCE STANDARDS

A. American Society of Testing and Materials
   1. ASTM D-140 Standard Practice for Sampling of Bituminous Materials
   2. ASTM D-449 Asphalt Used in Damp-proofing and Waterproofing, Type II and III
   3. ASTM D-2939 Standard Test Methods Emulsion Bitumen's Use as Protective Coatings
   4. ASTM D-3405 Joint Sealant Hot-Applied for Concrete and Asphalt Pavement
   5. ASTM D-3320 Emulsified Coal Tar Pitch (Mineral Colloid Type)
   6. ASTM D-3910 Design, Testing and Construction of Slurry Seal

1.04 SUBMITTALS

A. Material Certificates: Submit materials certificate to the Owner's engineer which is signed by the Contractor, certifying that materials comply with, or exceed, the requirements herein.

B. Seal Coat design shall be as per the requirement of the regulatory authority having jurisdiction or as approved by the Owner.

PART 2 - PRODUCTS

2.01 MATERIALS

A. SealMaster Polymer Modified Coal Tar Sealer (PMCTS) at the following specifications:
   1. SealMaster Specification
      a. Material – Material shall be homogenous and show no separation or coagulation that cannot be overcome by moderate stirring.
      b. Non Volatiles – 40%
      c. Ash Non Volatiles – 35 – 40%
      d. Solubility of Non Volatiles in CS2% - 20 min.
      e. Specific Gravity 25C – 1.18 MIN.
      f. Drying Time – 8 hr. MAX. (Typically less than 60 min.)
      g. Adhesion & Resistance to Water – No Penetration or Loss of Adhesion
      h. Resistance to Heat – No Blistering or Sagging
      i. Flexibility – No Cracking or Flaking
      j. Resistance to Impact – No Chipping, Flaking or Cracking
      k. Resistance to Volatilization – 10% Loss in Weight Max.
      l. Wet Film Continuity – Smooth, Nongranular Free from course particles

B. SealMaster Polymer Modified MasterSeal (PMM) to be used in AK, CA, AZ and NM ONLY at the following specifications:
   1. SealMaster Specification
      a. Material – Material shall be homogenous and show no separation or coagulation that cannot be overcome by moderate stirring.
      b. Non-Volatile, 43 – 47%

c. Ash of Non-Volatile, 42 – 52%
d. Specific Gravity 25oc 1.15 – 1.25
e. Drying Time – 8hrs. MAX.
f. Adhesion & Resistance to Water – No Penetration or Loss of Adhesion
g. Resistance to Heat – No Blistering or Sagging
h. Flexibility – No Cracking or Flaking
i. Resistance to Impact – No Chipping, Flaking or Cracking

Note: Only materials meeting the above specifications will be accepted. Certificate of Compliance from the refined coal tar manufacturer is required prior to application.

C. Oil Spot Treatment: SealMaster PetroSeal or prep seal oil spot primer as specified by the manufacturer for pavement sealer.
D. Water
E. Aggregate or sand as required and specified by the manufacturer
F. Polymer Additive (optional)
G. Fortifier
1. Water based epoxy-latex additive, designed as a fortifier for refined coal tar emulsions to increase resistance to power steering marks, fuel and chemical effects to assist in fast drying of the coating is acceptable.
2. Thickeners only are not permitted.

2.02 EQUIPMENT

A. Self-propelled squeegee equipment shall have a least 2 squeegee or brush devices (one behind the other) to assure adequate distribution and penetration of sealer into the bituminous pavement. Equipment shall have continuous agitation or mixing capabilities to maintain homogenous consistency of pavement sealer mixture throughout the application process.
B. Pressurized spray application equipment shall be capable of spraying pavement sealer with sand added. Equipment shall have continuous agitation or mixing capabilities to maintain homogenous consistency of pavement sealer mixture throughout the application process.
C. Hand squeegee and brushes shall be acceptable only in areas where practicality prohibits the use of mechanized equipment.

2.03 MIX DESIGNS

A. Sealer concentrate – 100 Gallon
B. Silica Sand 400 Meeting 40 to 60 fineness rating (AFS).
1. Black Beauty Slag Sand (w/ comparable sieve rating) may be substituted when silica sand is not available.
C. Water – Specified material does not require onsite dilution
D. Fortifier 3%
E. Curing agents on high traffic areas (when applicable)

PART 3 - EXECUTION

3.01 Apply pavement sealer when ambient temperature is 50° F and rising for a period of 24 hours after application. Do not apply when temperature is expected to drop below 50° F in a 24-hour period. Do not apply if rain is imminent within 8 hours.

3.02 Do not apply pavement sealer when ambient temperature is 90° F and above without first cooling the surface with a fine mist of water (fogging). The fogging should only dampen the surface without causing puddling.

3.03 Between September 15 and May 1, check the specifications and requirements of the State Department of Transportation WEATHER LIMITATIONS on the permitted dates of applying the seal coats.

3.04 SURFACE PREPARATION

A. Surface must be free from dirt, dust and includes grass along the edges. Remove and dispose of any loose and unsuitable materials, dirt, and debris from pavement surface by power blower or mechanical sweeping equipment.
B. Surface hairline cracks up to ½ inch must be filled with crack filler; cracks larger than ½ inch must be cleaned and filled with elastomeric emulsion crack filler.
C. When using a high performance crack sealant, please note on your proposal.
D. Potholes, alligator areas, and similar surface defects must be cut out and repairs made.
E. Treat all grease, oil and gasoline spots with compatible primer of the manufactured coating. In hot weather, the surface should be fogged with water prior to sealing.
F. Prior to spreading pavement sealer, paint all existing white paint stripes with black paint.
G. Contractor to dispose of all cans, bags and leftover materials off-site.

3.05 APPLICATION

A. Mix pavement sealer in accordance with the manufacturer's procedure to a uniform consistency before using. For each coat, the sealant shall be diluted with clean potable water while agitating. The percent of water to be added will be as per the manufacturer specification based on the asphalt surface quality, and the type of traffic it will experience. When the rubberized mixture has thickened, add sand or aggregate slowly to the mixing tank. Mix thoroughly before and slowly during the application.
    1. First coat on all parking areas at a rate of .13 gallons per square yard/coat. At no time are total coats to exceed 0.51 gallons per square yard. The first coat may be applied by hand squeegee, self propelled squeegee equipment or pressurized spray equipment. Hand Squeegee or self propelled squeegee equipment is preferred.
    2. Second coat on all parking areas at a rate of .13 gallons per square yard/coat. At no time are total coats to exceed 0.51 gallons per square yard. The second coat must be applied with pressurized spray equipment.
B. Allow a minimum of 24 hours of curing time before allowing traffic over treated surface or application of traffic marking paint. Use of solvent borne paint shall not be permitted.
C. Lines, stencils, and markings shall be repainted in original size & location, unless otherwise directed by the Owner, in accordance with Section 02745 Pavement Markings and Removal.
D. It is the Contractor's responsibility to check local zoning codes & regulations.
E. All seal coat and re-striping projects must be performed during available time periods (usually at night) that DO NOT interfere with normal store operations. Applications must be staged to provide customers free access to the building the following business day.

END OF SECTION 321236.13

This Page Left Intentionally Blank

SECTION 32 13 13

CONCRETE PAVEMENT CURB AND SIDEWALK

PART 1 - GENERAL

1.01 RELATED DOCUMENTS

A. Drawings and general provisions of the Contract, including General and Supplementary Conditions and all Specification Sections, apply to this Section.

1.02 SUMMARY

A. This Section includes exterior cement concrete pavement for the following:
   1. Driveways and roadways.
   2. Parking lots.
   3. Curbs and gutters.
   4. Walkways.
   5. Unit paver base (if used).

B. Related Sections include the following:
   1. Division 03 Section "Cast-in-Place Concrete" for general building applications of concrete.
   2. Division 31 Section “Earth Moving” for subgrade preparation, grading, and subbase course.
   3. Division 32 Section "Concrete Paving Joint Sealants" for joint sealants of joints in concrete pavement and at isolation joints of concrete pavement with adjacent construction (if used).

1.03 REFERENCE STANDARDS

A. American Society of Testing Materials (ASTM)
   1. A82 - Standard Specification for Steel Wire, Plain, for Concrete Reinforcement
   2. A185 - Standard Specification for Steel Welded Wire Fabric, Plain, for Concrete Reinforcement
   3. A615/A615M - Standard Specification for Deformed and Plain Billet-Steel Bars for Concrete Reinforcement
   4. C33 - Standard Specification for Concrete Aggregates
   5. C94 - Standard Specification for Ready-Mixed Concrete
   6. C150 - Standard Specification for Portland Cement
   7. C171 - Standard Specification for Sheet Materials for Curing Concrete
   8. C260 - Standard Specification for Air-Entraining Admixtures for Concrete
   9. C309 - Standard Specification for Liquid Membrane-Forming Compounds for Curing Concrete
   10. C494/C494M - Standard Specification for Chemical Admixtures for Concrete
   11. C979 - Standard Specification for Pigments for Integrally Colored Concrete
   12. C1116 - Standard Specification for Fiber-Reinforced Concrete and Shotcrete
   13. D1751 - Standard Specification for Preformed Expansion Joint Filler for Concrete Paving and Structural Construction (Nonextruding and Resilient Bituminous Types)
   14. D1752 - Standard Specification for Preformed Sponge Rubber and Cork Expansion Joint Fillers for Concrete Paving and Structural Construction
   15. D3405 - Standard Specification for Joint Sealants, Hot-Applied, for Concrete and Asphalt Pavements
   16. D5249 - Standard Specification for Backer Material for Use with Cold- and Hot-Applied Joint Sealants in Portland-Cement Concrete and Asphalt Joints
   17. D5893 - Standard Specification for Cold Applied, Single Component, Chemically Curing Silicone Joint Sealant for Portland Cement Concrete Pavements

B. American Concrete Institute (ACI)
   1. 301R-99 – Specifications for Structural Concrete
   2. 304R – Placing and Handling Concrete, etc.
   3. 309R-96 – Guide for Consolidating of Concrete
   4. 330.1 – Standard Specifications for Plain Concrete Parking Lots
   5. 330R-92 – Guide for Design & Construction of Concrete Parking Lots

6. 211.1R-91 – Standard Practice for Selecting Proportions for Normal, Heavyweight and Mass Concrete

C. American Association of State Highway and Transportation Officials (AASHTO)
1. M182 – Standard Specifications for Burlap Cloth made from Jute for Kenaf
2. M153 – Standard Specifications for Preformed Sponge Rubber and Cork Expansion Joint Filler.

1.04 SUBMITTALS

A. Product Data: For each type of manufactured material and product mix indicated.
B. Design Mixtures: For each concrete pavement mixture (see attached form at the end of this section). Include alternate mixture designs when characteristics of materials, project conditions, weather, test results, or other circumstances warrant adjustments.
C. General Contractor and Subcontractor shall execute the Conformance Submittal(s) at the end of this section.
D. Minutes of pre-installation conference.

1.05 QUALITY ASSURANCE

A. Manufacturer Qualifications: Manufacturer of ready-mixed concrete products who complies with ASTM C 94/C 94M requirements for production facilities and equipment.
B. ACI Publications: Comply with ACI 301, "Specification for Structural Concrete," unless modified by requirements in the Contract Documents.
C. Concrete Testing Service: The Owner will engage a qualified independent testing agency to perform material evaluation tests and to design concrete mixtures.
1. A slump test and an air entrainment test shall be performed for each load delivered.
2. Four (4) standard test cylinders shall be taken for each 55 cubic yards of concrete or each days pour, whichever is more frequent. Two cylinders shall be broken at 7 days and two cylinders shall be broken at 28 days.
D. Pre-installation Conference: Conduct conference at Project site to comply with requirements in Division 01 Section "Project Management and Coordination."
1. Before submitting design mixtures, review concrete pavement mixture design and examine procedures for ensuring quality of concrete materials and concrete pavement construction practices. Require representatives, including the following, of each entity directly concerned with concrete pavement, to attend conference:
a. Contractor's superintendent.
b. Independent testing agency responsible for concrete design mixtures.
c. Ready-mix concrete producer.
d. Concrete pavement subcontractor.

1.06 PROJECT CONDITIONS

A. Traffic Control: Maintain access for vehicular and pedestrian traffic as required for other construction activities.

PART 2 - PRODUCTS

2.01 MANUFACTURERS

A. In other Part 2 articles where titles below introduce lists, the following requirements apply to product selection:
1. Available Products: Subject to compliance with requirements, products that may be incorporated into the Work include, but are not limited to, products specified.
2. Products: Subject to compliance with requirements, provide one of the products specified.
3. Available Manufacturers: Subject to compliance with requirements, manufacturers offering products that may be incorporated into the Work include, but are not limited to, manufacturers specified.
4. Manufacturers: Subject to compliance with requirements, provide products by one of the manufacturers specified.

2.02 FORMS

A. Form Materials: Plywood, metal, metal-framed plywood, or other approved panel-type materials to provide full-depth, continuous, straight, smooth exposed surfaces.
   1. Use flexible or curved forms for curves with a radius 100 feet (30.5 m) or less.

B. Form-Release Agent: Commercially formulated form-release agent that will not bond with, stain, or adversely affect concrete surfaces and will not impair subsequent treatments of concrete surfaces.

2.03 STEEL REINFORCEMENT

A. Plain-Steel Welded Wire Reinforcement: ASTM A 185, 6 inches x 6 inches #10 mesh fabricated from as-drawn steel wire into flat sheets.

B. Reinforcing Bars: ASTM A 615/A 615M, Grade 40 deformed.

C. Plain Steel Wire: ASTM A 82, as drawn.

D. Deformed-Steel Wire: ASTM A 496.

E. Diamond Dowel Bars: ¼" x 4-1/2" Diamond Dowels by PNA.

F. Bar Supports: Bolsters, chairs, spacers, and other devices for spacing, supporting, and fastening reinforcing bars, welded wire reinforcement, and dowels in place. Manufacture bar supports according to CRSI's "Manual of Standard Practice" from steel wire, plastic, or precast concrete of greater compressive strength than concrete.

2.04 CONCRETE MATERIALS

A. Cementitious Material: Use the following cementitious materials, of the same type, brand, and source throughout the Project:
   1. Portland Cement: ASTM C 150, Type I, Type II or III.
   2. If indicated on the plan and only as approved by the Owner supplement with the following:
      a. Fly Ash: ASTM C 618, Class F.

B. Normal-Weight Aggregates: ASTM C 33, Combined aggregate gradation for concrete pavement and other designated concrete shall be 8% - 18% for large top size aggregates (1-1/2") or 8% - 22% for smaller top size aggregates (1" or ¾") retained on each sieve below the top size above the no. 100 sieve. Select coarse-aggregate size from options in first subparagraph below; add gradation requirements if preferred. PCA recommends maximum aggregate size of 3/4 inch (19 mm) in base slab if seeded exposed aggregate is pavement finish.
   1. Maximum Coarse-Aggregate Size: 1-1/2 inches nominal.

C. Water: ASTM C 94/C 94M.

D. Air-Entraining Admixture: ASTM C 260.

E. Calcium Chloride: The use of calcium chloride or admixtures containing more than 0.05% chloride ions is prohibited.

F. Chemical Admixtures: Provide admixtures certified by manufacturer to be compatible with other admixtures and to contain not more than 0.1 percent water-soluble chloride ions by mass of cementitious material.
   1. Air-Entraining Admixture: ASTM C 260.
   2. Water-Reducing Admixture: ASTM C 494/C 494M, Type A.
   3. Retarding Admixture: ASTM C 494/C 494M, Type B.
   4. Water-Reducing and Retarding Admixture: ASTM C 494/C 494M, Type D.
   5. High-Range, Water-Reducing Admixture: ASTM C 494/C 494M, Type F.
   6. Water-Reducing and Accelerating Admixture: ASTM C 494/C 494M, Type E.

2.05 CURING MATERIALS

A. Absorptive Cover: AASHTO M 182, Class 2, burlap cloth made from jute or kenaf, weighing approximately 9 oz./sq. yd. (305 g/sq. m) dry.

B. Moisture-Retaining Cover: ASTM C 171, polyethylene film or white burlap-polyethylene sheet.

C. Water: Potable.

D. Evaporation Retarder: Waterborne, monomolecular film forming; manufactured for application to fresh concrete.

E. Clear Solvent Borne Liquid Membrane Forming Curing Compound: ASTM C 309, Type 1, Class B.

F. Clear Waterborne Membrane-Forming Curing Compound: ASTM C 309, Type 1, Class B.

G. White Waterborne Membrane-Forming Curing Compound: ASTM C 309, Type 2, Class B.

2.06 RELATED MATERIALS

A. Expansion- and Isolation-Joint-Filler Strips: ASTM D 175, asphalt-saturated cellulosic fiber or ASTM D 1752, cork or self-expanding cork.

B. Coloring Agent: When required, add coloring agent to mix according to manufacturer's written instructions.
   1. Color Pigment: ASTM C 979, synthetic mineral-oxide pigments or colored water-reducing admixtures; color stable, free of carbon black**,** non-fading, and resistant to lime and other alkalis.
   2. Color: As indicated on Drawings and per manufacturer's designation.

C. Slip-Resistive Aggregate Finish: Factory-graded, packaged, rustproof, nonglazing, abrasive aggregate of fused aluminum-oxide granules or crushed emery with emery aggregate containing not less than 50 percent aluminum oxide and not less than 20 percent ferric oxide; unaffected by freezing, moisture, and cleaning materials.

D. Bonding Agent: ASTM C 1059, Type II, non-redispersible, acrylic emulsion or styrene butadiene.

E. Epoxy Bonding Adhesive: ASTM C 881, two-component epoxy resin, capable of humid curing and bonding to damp surfaces, of class suitable for application temperature and of grade to requirements, and as follows:

F. Chemical Surface Retarder: Water-soluble, liquid-set retarder with color dye, for horizontal concrete surface application, capable of temporarily delaying final hardening of concrete to a depth of 1/8 to 1/4 inch (3 to 6 mm).

G. Pigmented Mineral Dry-Shake Hardener: Factory-packaged dry combination of portland cement, graded quartz aggregate, color pigments, and plasticizing admixture. Use color pigments that are finely ground, nonfading mineral oxides interground with cement.

2.07 PAVEMENT MARKINGS

A. Pavement-Marking Paint: Lead and chromate free, ready mixed, complying with AASHTO M 248.
   1. Color: Yellow (on concrete).

B. Materials:
   1. **Sherwin Williams Setfast Non- leaded Chlorinated Rubber -** White on asphalt (TM5126), yellow on concrete (TM5127), or as indicated on the drawing(s) is preferred.
   2. **Sherwin Williams "Setfast Acrylic Waterborne Traffic Marking Paint"** – White on asphalt (TM226, yellow on concrete (TM225), or as indicated on the drawing(s)
   3. **Valspar Enterprise Latex Traffic Marking Paint** - White on asphalt (#2540), yellow on concrete (#2541), or as indicated on the drawing(s).
   4. **PPG (Pittsburg Paints)"SEEDHIDE® Traffic and Zone Marking Flat Latex" –** White on asphalt (11-23), yellow on concrete, or as indicated on the drawing(s).

C. Execution
   1. New concrete pavement shall age a minimum of 30 days before painting, unless otherwise approved by the Owner.
   2. Proceed with pavement marking only on clean, dry surfaces and at a minimum ambient or surface temperature of 50 degrees F not exceeding 90 degrees F and relative humidity at a maximum of 85%.
   3. Surface shall be clean and free of dirt, grease, oil, or other contaminants which could interfere with adhesion.
   4. Apply paint material at manufacturer's recommended rates to provide a minimum wet film thickness of 15 mils and dry film thickness of 10 mils per coat.
   5. Paint to be applied in 2 coats using a template or striping machine. Stripes shall be a minimum width of 4 inches unless otherwise noted on the Drawings.

D. Temporary Pavement Markings
   1. Temporary paint shall be applied in accordance with permanent pavement marking specifications however only one (1) coat of paint shall be required. The contractor may use a temporary removable pavement marking tape only as approved in writing by the Owner. Tape that has become damaged and is no longer serviceable shall be replaced without additional compensation.

2. All temporary markings shall be removed when no longer required. Any pavement area that has been determined to be damaged as a result of the removal operation shall be repaired at no additional cost to the Owner.

E. Pavement Marking Removal
   1. A motorized abrasive device shall be utilized to remove existing markings. Existing pavement marking lines and symbols that are to be removed shall be accomplished such that material or structural damage to the surface or texture of the pavement is avoided. The Contractor shall repair any damage to the pavement at no expense to the Owner. After removal, the pavement shall be in a condition that will not mislead or misdirect customers or motorists. Pavement marking removal within public rights of way shall be completed in accordance with the regulatory authority having jurisdiction and the Drawings and Specifications.

2.08 WHEEL STOPS

A. Wheel Stops: Precast, air-entrained concrete, 2500-psi (17.2-MPa) minimum compressive strength, 6 inches (150 mm) high by 6 inches (150 mm) wide by 72 inches (1820 mm) long. Provide chamfered corners and drainage slots on underside and holes for anchoring to substrate.
   1. Dowels: Galvanized steel, 3/4-inch (19-mm) diameter, 12-inch (300-mm) minimum length. Or #4 bars 12-inch (300 mm) minimum.

2.09 CONCRETE MIXTURES

A. Prepare design mixtures, proportioned according to ACI 211.IR-91 and ACI 304 and ACI 301, for each type and strength of normal-weight concrete determined by either laboratory trial mixes or field experience.
   1. Use a qualified independent testing agency for preparing and reporting proposed concrete mixture designs for the trial batch method.

B. Proportion mixtures to provide normal-weight concrete with the following properties:
   1. Compressive Strength (28 Days): 4000 psi (27.6 MPa).
   2. Slump Limit: Maximum 5 inches (125 mm) at time of placement for pavement, 2 inch (50 mm) for curb and sidewalk.

C. Add air-entraining admixture at manufacturer's prescribed rate to result in normal-weight concrete at point of placement having an air content as follows:
   1. Air Content: 5-% to 8% for pavement, curb and sidewalk.

D. Limit water-soluble, chloride-ion content in hardened concrete to 0.15 percent by weight of cement.

E. Chemical Admixtures: Use admixtures according to manufacturer's written instructions.
   1. Use water-reducing and retarding admixture when required by high temperatures, low humidity, or other adverse placement conditions.

F. Cementitious Materials: Limit percentage, by weight, of cementitious materials other than portland cement according to ACI 301 requirements, only as authorized by the Owner in writing as follows:
   1. Fly Ash or Pozzolan: 25 percent.

G. Color Pigment: When indicated on the Drawings add color pigment to concrete mixture according to manufacturer's written instructions and to result in hardened concrete color consistent with approved mockup.

2.10 CONCRETE MIXING

A. Ready-Mixed Concrete: Measure, batch, and mix concrete materials and concrete according to ASTM C 94/C 94M and ASTM C 1116. Furnish batch certificates for each batch discharged and used in the Work.
   1. When air temperature is between 85 deg F (30 deg C) and 90 deg F (32 deg C), reduce mixing and delivery time from 1-1/2 hours to 75 minutes; when air temperature is above 90 deg F (32 deg C), reduce mixing and delivery time to 60 minutes.

B. Project-Site Mixing: On-site mixing must be approved by the Owner. Comply with requirements and measure, batch, and mix concrete materials and concrete according to ASTM C 94/C 94M. Mix concrete materials in appropriate drum-type batch machine mixer.

1. For concrete mixes of 1 cu. yd. (0.76 cu. m) or smaller, continue mixing at least 1-1/2 minutes, but not more than 5 minutes after ingredients are in mixer, before any part of batch is released.
2. For concrete mixes larger than 1 cu. yd. (0.76 cu. m), increase mixing time by 15 seconds for each additional 1 cu. yd. (0.76 cu. m).
3. Provide batch ticket for each batch discharged and used in the Work, indicating Project identification name and number, date, mixture type, mixing time, quantity, and amount of water added.

PART 3 - EXECUTION

3.01 EXAMINATION

A. Examine exposed subgrades and subbase surfaces for compliance with requirements for dimensional, grading, and elevation tolerances.

B. Proof-roll prepared sub-base surface below concrete pavements with heavy pneumatic-tired equipment to identify soft pockets and areas of excess yielding.
   1. Completely proof-roll subbase in one direction and repeat in perpendicular direction. Limit vehicle speed to 3 mph (5 km/h).
   2. Proof-roll with a loaded 10-wheel tandem-axle dump truck weighing not less than 15 tons (13.6 tonnes).
   3. Subbase with soft spots and areas of pumping or rutting exceeding depth of 1/2 inc**h (13 mm)** require correction according to requirements in Division 31 Section "Earth Moving."

C. Proceed with concrete pavement operations only after nonconforming conditions have been corrected and sub-grade is ready to receive pavement.

3.02 PREPARATION

A. Remove loose material from compacted sub-base surface immediately before placing concrete.

3.03 EDGE FORMS AND SCREED CONSTRUCTION

A. Set, brace, and secure edge forms, bulkheads, and intermediate screed guides for pavement to required lines, grades, and elevations. Install forms to allow continuous progress of work and so forms can remain in place at least 24 hours after concrete placement.

B. Maintain sufficient quantity of forms to allow continuing work so that forms are in place a minimum of 24 hours after concrete placement.

C. Clean forms after each use and coat with form-release agent to ensure separation from concrete without damage.

D. Flexible or curved forms shall be used on curves. Forms shall be of full depth of the concrete and of strength when staked sufficient to resist the pressure of concrete and the loads resulting from the finishing operations without springing, settling or losing shape.

3.04 STEEL REINFORCEMENT

A. General: Comply with CRSI's "Manual of Standard Practice" for fabricating, placing, and supporting reinforcement.

B. Clean reinforcement of loose rust and mill scale, earth, ice, or other bond-reducing materials.

C. Arrange, space, and securely tie bars and bar supports to hold reinforcement in position during concrete placement. Maintain minimum cover to reinforcement.

D. Accurately position and support reinforcement and secure against displacement. Set wire ties with ends directly into concrete.

E. Install welded wire reinforcement in lengths as long as practicable. Lap adjoining pieces at least one full mesh, and lace splices with wire. Offset laps of adjoining widths to prevent continuous laps in either direction. Support reinforcing steel on wire chairs to ensure wire stays mid-depth of sidewalk section during concrete pour.

3.05 JOINTS

A. General: Form pre-molded expansion and contraction joints, construction joints, control joints, thickened edge expansion joints, isolation joints, and tool edgings true to line with faces

perpendicular to surface plane of concrete. Construct transverse joints at right angles to centerline, unless otherwise indicated.

1. When joining existing pavement, place transverse joints to align with previously placed joints, unless otherwise indicated.

B. Construction Joints: Set construction joints at side and end terminations of pavement and at locations where pavement operations are stopped for more than one-half hour unless pavement terminates at isolation joints.

1. Diamond Dowels: Install ¼" x 4-1/2" Diamond Dowels by PNA at 24" on center or as shown on the drawings. Install per manufacturer's recommendations.

C. Isolation Joints: Locate isolation joints as shown on the Drawings. Form isolation joints of preformed joint-filler strips abutting Provide catch basins, manholes, inlets, structures, walks, light pole bases and other fixed objects , and where indicated.

1. Expansion: Provide joint filler for the entire depth of the slab section and not less than one (1) inch below finished surface so as to allow for joint sealer. Provide thickened edge expansion joint as indicated on the Drawings.
    a. Provide ½" expansion joints for curb and gutter and sidewalk at 100 feet on center.
    b. Provide ½" contraction joints for curb and gutter at 10 feet on center.
    c. Extend joint fillers full width and depth of joint.
    d. Terminate joint filler not less than 1/2 inch (13 mm) or more than 1 inch (25 mm) below finished surface if joint sealant is indicated.
    e. Place top of joint filler flush with finished concrete surface if joint sealant is not indicated.
    f. Furnish joint fillers in one-piece lengths. Where more than one length is required, lace or clip joint-filler sections together.
    g. Protect top edge of joint filler during concrete placement with metal, plastic, or other temporary preformed cap. Remove protective cap after concrete has been placed on both sides of joint.

D. Contraction ("control") Joints: Form weakened-plane contraction joints, sectioning concrete into areas as indicated. Construct contraction joints for a depth equal to at least one-fourth of the concrete thickness, or 1 inch, whichever is deeper. For sidewalks, control joint spacing shall be equal to the sidewalk width. For concrete pavement, control joint spacing shall be placed as shown on the drawings but no greater than 30 times the slab thickness on center both ways.

1. Grooved Joints: Form contraction joints after initial floating by grooving and finishing each edge of joint with grooving tool to a 3/8-inch (10-mm) radius. Repeat grooving of contraction joints after applying surface finishes. Eliminate groove marks on concrete surfaces.
2. Sawed Joints: Form contraction joints with power saws equipped with shatterproof abrasive or diamond-rimmed blades. Cut 1/8-inch- (3-mm-) wide joints into concrete within 24 hours of concrete placement and as soon as the cutting action will not tear, abrade, or otherwise damage surface. If required re-saw joint immediately prior to installing sealant to achieve a ¼ inch joint width - second saw joint to be ¼-inch (6 mm) if required. Power saws are to be equipped with a bag to collect concrete dust. Concrete dust shall be disposed of in accordance with the Stormwater Pollution Prevention Plan.

E. Edging: Tool edges of pavement, gutters, curbs, and joints in concrete after initial floating with an edging tool to a 3/8-inch (10-mm) radius. Repeat tooling of edges after applying surface finishes. Eliminate tool marks on concrete surfaces.

3.06 CONCRETE PLACEMENT

A. General: All concrete walks and aprons shall be a minimum of 4 inches thick as shown on the Drawings, with a turned down edge as detailed. Comply with tolerances in ACI 330.1 Specification for Plain Concrete Parking Lots.

B. Inspection: Before placing concrete, inspect and complete formwork installation, steel reinforcement, and items to be embedded or cast in. Notify other trades to permit installation of their work.

C. Remove snow, ice, or frost from sub-base surface and reinforcement before placing concrete. Do not place concrete on frozen surfaces.

D. Moisten sub-base to provide a uniform dampened condition at time concrete is placed. Do not place concrete around manholes or other structures until they are at required finish elevation and alignment.

E. Comply with ACI 301 requirements for measuring, mixing, transporting, and placing concrete.
F. Do not add water to fresh concrete after testing.
G. Deposit and spread concrete in a continuous operation between transverse joints. Do not push or drag concrete into place or use vibrators to move concrete into place.
H. Consolidate concrete according to ACI 301 by mechanical vibrating equipment supplemented by hand spading, rodding, or tamping.
   1. Consolidate concrete along face of forms and adjacent to transverse joints with an internal vibrator. Keep vibrator away from joint assemblies, reinforcement, or side forms. Use only square-faced shovels for hand spreading and consolidation. Consolidate with care to prevent dislocating reinforcement, dowels, and joint devices.
I. Screed pavement surfaces with a straightedge and strike off.
J. Commence initial floating using bull floats or darbies to impart an open textured and uniform surface plane before excess moisture or bleed water appears on the surface. Do not further disturb concrete surfaces before beginning finishing operations or spreading surface treatments.
K. Curbs and Gutters: When automatic machine placement is used for curb and gutter placement, submit revised mix design and laboratory test results that meet or exceed requirements. Produce curbs and gutters to required cross section, lines, grades, finish, and jointing as specified for formed concrete. If results are not approved, remove and replace with formed concrete.
L. Slip-Form Pavers: When automatic machine placement is used for pavement, submit revised mix design and laboratory test results that meet or exceed requirements. Produce pavement to required thickness, lines, grades, finish, and jointing as required for formed pavement.
   1. Compact subbase and prepare subgrade of sufficient width to prevent displacement of paver machine during operations.
M. When adjoining pavement lanes are placed in separate pours, do not operate equipment on concrete until pavement has attained 85 percent of its 28-day compressive strength.
N. Cold-Weather Placement: Comply with ACI 306.1 and as follows. Protect concrete work from physical damage or reduced strength that could be caused by frost, freezing actions, or low temperatures.
   1. When air temperature has fallen to or is expected to fall below 40 deg F (4.4 deg C), uniformly heat water and aggregates before mixing to obtain a concrete mixture temperature of not less than 50 deg F (10 deg C) and not more than 80 deg F (27 deg C) at point of placement.
   2. Do not use frozen materials or materials containing ice or snow.
   3. Do not use calcium chloride, salt, or other materials containing antifreeze agents or chemical accelerators unless otherwise specified and approved in mix designs.
O. Hot-Weather Placement: Comply with ACI 301 and as follows when hot-weather conditions exist:
   1. Cool ingredients before mixing to maintain concrete temperature below 90 deg F (32 deg C) at time of placement. Chilled mixing water or chopped ice may be used to control temperature, provided water equivalent of ice is calculated to total amount of mixing water. Using liquid nitrogen to cool concrete is Contractor's option.
   2. Cover steel reinforcement with water-soaked burlap so steel temperature will not exceed ambient air temperature immediately before embedding in concrete.
   3. Fog-spray forms, steel reinforcement, and subgrade just before placing concrete. Keep subgrade moisture uniform without standing water, soft spots, or dry areas.

3.07 FLOAT FINISHING

A. General: Do not add water to concrete surfaces during finishing operations.
B. Float Finish: Begin the second floating operation when bleed-water sheen has disappeared and concrete surface has stiffened sufficiently to permit operations. Float surface with power-driven floats, or by hand floating if area is small or inaccessible to power units. Finish surfaces to true planes. Cut down high spots and fill low spots. Refloat surface immediately to uniform granular texture.
   1. Medium Textured Broom Finish: Draw a medium bristle broom across float-finished concrete surface perpendicular to line of traffic to provide a uniform, medium (1/16 (1.6mm)) texture.

3.08 CONCRETE PROTECTION AND CURING

A. General: Protect freshly placed concrete from premature drying and excessive cold or hot temperatures.
B. Comply with ACI 306.1 for cold-weather protection.
C. Evaporation Retarder: Apply evaporation retarder to concrete surfaces if hot, dry, or windy conditions cause moisture loss approaching 0.2 lb/sq. ft. x h (1 kg/sq. m x h) before and during finishing operations. Apply according to manufacturer's written instructions after placing, screeding, and bull floating or darbying concrete, but before float finishing.
D. Begin curing after finishing concrete but not before free water has disappeared from concrete surface.
E. Curing Methods: Cure concrete by moisture curing, moisture-retaining-cover curing, curing compound, or a combination of these as follows:
    1. Moist Curing: Keep surfaces continuously moist for not less than seven days with the following materials:
        a. Water.
        b. Continuous water-fog spray.
        c. Absorptive cover, water saturated and kept continuously wet. Cover concrete surfaces and edges with 12-inch (300-mm) lap over adjacent absorptive covers.
    2. Moisture-Retaining-Cover Curing: Cover concrete surfaces with moisture-retaining cover for curing concrete, placed in widest practicable width, with sides and ends lapped at least 12 inches (300 mm), and sealed by waterproof tape or adhesive. Immediately repair any holes or tears during curing period using cover material and waterproof tape.
    3. Curing Compound: Apply uniformly in continuous operation by power spray or roller according to manufacturer's written instructions. Recoat areas subjected to heavy rainfall within three hours after initial application. Maintain continuity of coating and repair damage during curing period.
    4. All exterior concrete surfaces shall receive one coat of exterior sealer.

3.09 PAVEMENT TOLERANCES

A. Comply with tolerances of ACI 117 (based on ACI 330.1) and as follows:
    1. Elevation: 1/4 inch (6 mm).
    2. Thickness: Plus 3/8 inch (10 mm), minus 1/4 inch (6 mm).
    3. Surface: Gap below 10-foot- (3-m-) long, unleveled straightedge not to exceed 1/4 inch (6 mm).
    4. Lateral Alignment and Spacing of Tie Bars and Dowels: 1 inch (25 mm).
    5. Vertical Alignment of Tie Bars and Dowels: 1/4 inch (6 mm).
    6. Alignment of Tie-Bar End Relative to Line Perpendicular to Pavement Edge: 1/2 inch (13 mm).
    7. Alignment of Dowel-Bar End Relative to Line Perpendicular to Pavement Edge: Length of dowel 1/4 inch per 12 inches (6 mm per 300 mm).
    8. Joint Spacing: 3 inches (75 mm).
    9. Contraction Joint Depth: Plus 1/4 inch (6 mm), no minus.
    10. Joint Width: Plus 1/8 inch (3 mm), no minus.

3.10 PAVEMENT MARKING

A. Do not apply pavement-marking paint until layout, colors, and placement have been verified with Owner.
B. Allow concrete pavement to cure for 28 days and be dry before starting pavement marking.
C. Sweep and clean surface to eliminate loose material and dust.
D. Apply paint with mechanical equipment to produce pavement markings of dimensions indicated with uniform, straight edges. Apply at manufacturer's recommended rates to provide a minimum wet film thickness of 15 mils (0.4 mm).

3.11 WHEEL STOPS

A. Securely attach wheel stops into pavement with not less than two galvanized steel dowels embedded in holes drilled or cast into wheel stops at one-quarter to one-third points. Firmly bond

each dowel to wheel stop and to pavement. Securely install dowels into pavement and bond to wheel stop. Recess head of dowel beneath top of wheel stop.

3.12 FIELD QUALITY CONTROL

A. Testing Agency: Owner will engage and pay for a qualified independent testing and inspecting agency to perform field tests and inspections and prepare test reports.

B. Testing Services: Testing of composite samples of fresh concrete obtained according to ASTM C 172 shall be performed according to the following requirements:

1. Slump and Air Content Testing Frequency: Obtain at least 1 composite sample for each load delivered.
    a. Slump: ASTM C 143/C 143M; Perform additional tests when concrete consistency appears to change.
    b. Air Content: ASTM C 231, pressure method.
    c. Concrete Temperature: ASTM C 1064; one test hourly when air temperature is 40 deg F (4.4 deg C) and below and when 80 deg F (27 deg C) and above.
2. Test Cylinder Frequency: Obtain four standard test cylinders for each 55 cubic yards of concrete or each day's pour, whichever is more frequent.
    a. Compressive-Strength Tests: ASTM C 39/C 39M; test 2 specimen cylinders at 7 days and 2 specimen cylinders at 28 days.

C. Strength of each concrete mix will be satisfactory if average of any 3 consecutive compressive-strength tests equals or exceeds specified compressive strength and no compressive-strength test value falls below specified compressive strength by more than 500 psi (3.4 MPa).

D. Test results shall be reported in writing to Owner, concrete manufacturer, and Contractor within 48 hours of testing. Reports of compressive-strength tests shall contain Project identification name and number, date of concrete placement, name of concrete testing and inspecting agency, location of concrete batch in Work, design compressive strength at 28 days, concrete mixture proportions and materials, compressive breaking strength, and type of break for both 7- and 28-day tests.

E. Additional Tests: Testing and inspecting agency shall make additional tests of concrete when test results indicate that slump, air entrainment, compressive strengths, or other requirements have not been met, as directed by Architect.

F. Remove and replace concrete pavement where test results indicate that it does not comply with specified requirements.

G. Additional testing and inspecting, at Contractor's expense, will be performed to determine compliance of replaced or additional work with specified requirements.

3.13 REPAIRS AND PROTECTION

A. Remove and replace concrete pavement that is broken, damaged, or defective or that does not comply with requirements in this Section.

B. Protect concrete from damage. Exclude traffic from pavement for at least 14 days after placement. When construction traffic is permitted, maintain pavement as clean as possible by removing surface stains and spillage of materials as they occur.

C. Maintain concrete pavement free of stains, discoloration, dirt, and other foreign material. Sweep concrete pavement not more than two days before date scheduled for Substantial Completion inspections.

END OF SECTION 321313

DESIGN INFORMATION

	Please check one
Based on Standard Deviation Analysis	
Trial Mix Test Data	

DESIGN CHARACTERISTICS

Density		pcf
Strength		psi (28 day)
Air		% specified

If trial mixes are used the Mix Design is proportioned to achieve f'cr = f'c + 1200 psi
(1400 psi for strength higher than 5000 psi at 28 days)

MATERIALS	***Type/ Source***	***Specific Gravity***	***Weight/lb.***	***Absolute Vol. cu.ft.***
Cement				
Microsilica				
Coarse Aggregate				
Fine Aggregate				
Water				
Other				
		TOTAL		27.0 cu. ft.

* Water/Cement Ratio (lbs. water/lbs. cement) = _____%

ADMIXTURES	**Manufacturer**	**Dosage oz/cwt**
Water Reducer		
Air Entraining Agent		
High Range Water Reducer		
Non-Corrosive Accelerator		
Other		

Slump before HRWR		*inches*
Slump after HRWR		*inches*

Standard Deviation Analysis (from experience records):

# of Test Cylinders Evaluated:	
Standard Deviation:	

f'cr-f'c + 1.34s or f'cr = f'c + 2.33s - 500

Slump before HRWR		*inches*		
Slump after HRWR		*inches*		

Standard Deviation Analysis (from experience records):

# of Test Cylinders Evaluated:	
Standard Deviation:	

f'cr-f'c + 1.34s or f'cr = f'c + 2.33s - 500

(Refer to ACI 301 for increased deviation factor when less than 30 tests are available)

LABORATORY TEST DATA

Compressive Strength	Age (days)	Mix # 1	Mix #2	Mix #3
	7	psi	psi	psi
	7	psi	psi	psi
	28	psi	psi	psi
	28	psi	psi	psi
	28 average	psi	psi	psi

REQUIRED ATTACHMENTS

	Please Check
Coarse Aggregate Gradation Report	
Fine Aggregate Gradation Report	
Concrete Compressive Strength Data or Trial Mixture Test Data	
Admixture Compatability certification letter	

Submitted by:

Name:	
Address:	
Phone #:	
Main Plant Location:	
Miles from Project:	
Secondary Plant Location:	
Miles from Project:	
Date:	

CONFORMANCE SUBMITTAL
SECTION 321313 – CONCRETE PAVEMENT CURB AND SIDEWALK

Project Location _____
(*City, State*)

General Contractor: _____
(*Company Name, Phone Number*)

_____
(*Address*)

Sub-Contractor: _____
(*Company Name, Phone Number*)

_____
(*Address*)

The following products have been selected (check one box) for use in this project from the list of acceptable products specified:

Exterior Concrete Sealant:
☐ Sonneborn "Kure-N-Seal 30" exterior acrylic sealer
☐ Euclid "Super Rez-Seal

Cold-Applied Joint Sealant ASTM D5893, self leveling silicone sealant:
☐ Crafco Inc. "Roadwaver Silicone-SL"
☐ Dow Corning 888
☐ Dow Corning 890-SL
☐ Sonneborn "Sonomeric 1 Sealant"
☐ Tremco "Vulkem 45"

Hot-Applied Joint Sealant: ASTM D3405, Polymeric sealant.
☐ Crafco Inc. "ROADSAVER 22"
☐ W.R. Meadows, Inc. "SEALTIGHT HI-SPEC"

I represent to City/Owner/Engineer that the product selected will be installed in compliance with the applicable codes for the authorities having jurisdiction and in accordance with the contract documents. If noncompliance is discovered the General Contractor shall make or cause to be made all necessary corrections to meet the applicable codes and specifications. Immediately or as directed by Owner the work shall be completed without additional cost to the Owner and / or the contract.

Sub-Contractor: _____
(*Signature of the Authorized Agent of the Sub-Contractor*) Date

_____
(*Print Name of the Authorized Agent of the Sub-Contractor*)

General Contractor: _____
(*Signature of the Authorized Agent of the General Contractor*) Date

_____
(Print Name of the Authorized Agent of the General Contractor

SECTION 32 13 73

CONCRETE PAVING JOINT SEALANTS

PART 1 - GENERAL

1.01 RELATED DOCUMENTS

A. Drawings and general provisions of the Contract, including General and Supplementary Conditions and all Specification Sections, apply to this Section.

1.02 SUMMARY

A. Section Includes:
   1. Cold-applied joint sealants.
   2. Cold-applied, jet-fuel-resistant joint sealants.
   3. Hot-applied joint sealants.
   4. Hot-applied, jet-fuel-resistant joint sealants.

B. Related Sections:
   1. Division 32 Section " Asphalt Paving" for constructing joints between concrete and asphalt pavement.
   2. Division3 2 Section "Concrete Pavement Curb and Sidewalk" for constructing joints in concrete pavement.
   3. Testing will not be required if joint-sealant manufacturers submit joint-preparation data that are based on previous testing, not older than 24 months, of sealant products for compatibility with and adhesion to joint substrates and other materials matching those submitted.

1.03 SUBMITTALS

A. Product Data: For each joint-sealant product indicated.

B. Product Certificates: For each type of joint sealant and accessory, from manufacturer.

C. Product Test Reports: Based on evaluation of comprehensive tests performed by a qualified testing agency, for joint sealants.

1.04 QUALITY ASSURANCE

A. Installer Qualifications: Manufacturer's authorized representative who is trained and approved for installation of units required for this Project.

B. Source Limitations: Obtain each type of joint sealant from single source from single manufacturer.

1.05 PROJECT CONDITIONS

A. Do not proceed with installation of joint sealants under the following conditions:
   1. When ambient and substrate temperature conditions are outside limits permitted by joint-sealant manufacturer.
   2. When joint substrates are wet.
   3. Where joint widths are less than those allowed by joint-sealant manufacturer for applications indicated.
   4. Where contaminants capable of interfering with adhesion have not yet been removed from joint substrates.

PART 2 - PRODUCTS

2.01 MATERIALS

A. Compatibility: Provide joint sealants, backing materials, and other related materials that are compatible with one another and with joint substrates under conditions of service and application, as demonstrated by joint-sealant manufacturer based on testing and field experience.

B. Colors of Exposed Joint Sealants: As indicated on the Drawings.

2.02 COLD-APPLIED JOINT SEALANTS

A. Single-Component, Self-Leveling, Silicone Joint Sealant for Concrete: ASTM D 5893, Type SL.
   1. Products: Subject to compliance with requirements, provide one of the following:
      a. Crafco Inc., an ERGON company; RoadSaver Silicone Sealant.
      b. Dow Corning Corporation; 888.
      c. Sonneborn “Sonometic 1 Sealant”
      d. Tremco “Vulkem 45”.

2.03 HOT-APPLIED JOINT SEALANTS

A. Hot-Applied, Single-Component Joint Sealant for Concrete and Asphalt: ASTM D 6690, Types I, II, and III.
   1. Products: Subject to compliance with requirements, provide one of the following:
      a. Craftco Inc. “Roadsaver 222”
      b. Meadows, W. R., Inc.; Sealtight Hi-Spec.

2.04 CONCRETE SEALANTS

A. Exterior Concrete Sealant: Sonneborn “kure-n-Seal 30” exterior acrylic sealer, or Euclid “Super Rez-Seal.

2.05 JOINT FILLERS

A. Joint Fillers: Resilient pre-molded bituminous impregnated fiberboard units complying with ASTM D 1751, asphalt-saturated cellulosic fiber, ASSHTO M 152, Type I: or ASTM D 1752, cork or self-expanding cork.

2.06 JOINT-SEALANT BACKER MATERIALS

A. General: Provide joint-sealant backer materials that are non-staining; are compatible with joint substrates, sealants, primers, and other joint fillers; and are approved for applications indicated by joint-sealant manufacturer based on field experience and laboratory testing.
B. Round Backer Rods for Hot-Applied Joint Sealants: ASTM D 5249, Type 1, of diameter and density required to control sealant depth and prevent bottom-side adhesion of sealant.
C. Round Backer Rods for Cold-Applied Joint Sealants: ASTM D 5249, Type 3, of diameter and density required to control joint-sealant depth and prevent bottom-side adhesion of sealant.
D. Backer Strips for Cold- and Hot-Applied Joint Sealants: ASTM D 5249; Type 2; of thickness and width required to control joint-sealant depth, prevent bottom-side adhesion of sealant, and fill remainder of joint opening under sealant.

2.07 PRIMERS

A. Primers: Product recommended by joint-sealant manufacturer where required for adhesion of sealant to joint substrates indicated, as determined from preconstruction joint-sealant-substrate tests and field tests.

PART 3 - EXECUTION

3.01 EXAMINATION

A. Examine joints indicated to receive joint sealants, with Installer present, for compliance with requirements for joint configuration, installation tolerances, and other conditions affecting joint-sealant performance.
B. Proceed with installation only after unsatisfactory conditions have been corrected.

3.02 PREPARATION

A. Surface Cleaning of Joints: Clean out joints immediately before installing joint sealants to comply with joint-sealant manufacturer's written instructions.
B. Joint Priming: Prime joint substrates where indicated or where recommended in writing by joint-sealant manufacturer, based on preconstruction joint-sealant-substrate tests or prior experience. Apply primer to comply with joint-sealant manufacturer's written instructions. Confine primers to areas of joint-sealant bond; do not allow spillage or migration onto adjoining surfaces.

3.03 INSTALLATION OF JOINT SEALANTS

A. General: Comply with joint-sealant manufacturer's written installation instructions for products and applications indicated unless more stringent requirements apply.

B. Joint-Sealant Installation Standard: Comply with recommendations in ASTM C 1193 for use of joint sealants as applicable to materials, applications, and conditions indicated.

C. Install joint-sealant backings of kind indicated to support joint sealants during application and at position required to produce cross-sectional shapes and depths of installed sealants relative to joint widths that allow optimum sealant movement capability.
   1. Do not leave gaps between ends of joint-sealant backings.
   2. Do not stretch, twist, puncture, or tear joint-sealant backings.
   3. Remove absorbent joint-sealant backings that have become wet before sealant application and replace them with dry materials.

D. Install joint sealants using proven techniques that comply with the following and at the same time backings are installed:
   1. Place joint sealants so they directly contact and fully wet joint substrates.
   2. Completely fill recesses in each joint configuration.
   3. Produce uniform, cross-sectional shapes and depths relative to joint widths that allow optimum sealant movement capability.

E. Tooling of Nonsag Joint Sealants: Immediately after joint-sealant application and before skinning or curing begins, tool sealants according to the following requirements to form smooth, uniform beads of configuration indicated; to eliminate air pockets; and to ensure contact and adhesion of sealant with sides of joint:
   1. Remove excess joint sealant from surfaces adjacent to joints.
   2. Use tooling agents that are approved in writing by joint-sealant manufacturer and that do not discolor sealants or adjacent surfaces.

F. Provide joint configuration to comply with joint-sealant manufacturer's written instructions unless otherwise indicated.

3.04 CLEANING

A. Clean off excess joint sealant or sealant smears adjacent to joints as the Work progresses, by methods and with cleaning materials approved in writing by manufacturers of joint sealants and of products in which joints occur.

3.05 PROTECTION

A. Protect joint sealants, during and after curing period, from contact with contaminating substances and from damage resulting from construction operations or other causes so sealants are without deterioration or damage at time of Substantial Completion. If, despite such protection, damage or deterioration occurs, cut out and remove damaged or deteriorated joint sealants immediately and replace with joint sealant so installations in repaired areas are indistinguishable from the original work.

3.06 PAVEMENT-JOINT-SEALANT SCHEDULE

A. Joint-Sealant Application: Joints within cement concrete pavement.
   1. Joint Location:
      a. Expansion and isolation joints in cast-in-place concrete pavement.
      b. Contraction joints in cast-in-place concrete pavement.
      c. Construction joints in cast-in-place concrete pavement.
      d. Saw joints in joints in cast-in-place concrete pavement
      e. Other joints as indicated.
   2. Silicone Joint Sealant for Concrete:
      a. Crafco Inc., an ERGON company; RoadSaver Silicone.
      b. Dow Corning Corporation; 888.
      c. Sonneborn “Sonometic 1 Sealant”
      d. Tremco “Vulkem 45”.
   3. Hot-Applied Joint Sealant for Concrete:
      a. Craftco Inc. “Roadsaver 22”

b. Meadows, W. R., Inc.; Sealtight Hi-Spec.

4. Joint-Sealant Color: Unless otherwise indicated on Drawings: Gray.

END OF SECTION 321373

SECTION 32 92 00

TURF AND GRASSES

PART 1 - GENERAL

1.01 RELATED DOCUMENTS

A. Drawings and general provisions of the Contract, including General and Supplementary Conditions and all Specification Sections, apply to this Section.

1.02 SUMMARY

A. Section Includes:
   1. Seeding.
   2. Hydroseeding.
   3. Sodding.
   4. Plugging.
   5. Sprigging.
   6. Meadow grasses and wildflowers.
   7. Turf renovation.
   8. Erosion-control material(s).
   9. Grass paving.

B. Related Sections:
   1. Division 31 Section "Site Clearing" for topsoil stripping and stockpiling.
   2. Division 31 Section "Earth Moving" for excavation, filling and backfilling, and rough grading.
   3. Division 32 Section "Planting Irrigation" for turf irrigation.
   4. Division 33 Section "Storm Utility Drainage Piping" for subsurface drainage.

1.03 DEFINITIONS

A. Duff Layer: The surface layer of native topsoil that is composed of mostly decayed leaves, twigs, and detritus.

B. Finish Grade: Elevation of finished surface of planting soil.

C. Manufactured Topsoil: Soil produced off-site by homogeneously blending mineral soils or sand with stabilized organic soil amendments to produce topsoil or planting soil.

D. Pesticide: A substance or mixture intended for preventing, destroying, repelling, or mitigating a pest. This includes insecticides, miticides, herbicides, fungicides, rodenticides, and molluscicides. It also includes substances or mixtures intended for use as a plant regulator, defoliant, or desiccant.

E. Pests: Living organisms that occur where they are not desired or that cause damage to plants, animals, or people. These include insects, mites, grubs, mollusks (snails and slugs), rodents (gophers, moles, and mice), unwanted plants (weeds), fungi, bacteria, and viruses.

F. Planting Soil: Standardized topsoil; existing, native surface topsoil; existing, in-place surface soil; imported topsoil; or manufactured topsoil that is modified with soil amendments and perhaps fertilizers to produce a soil mixture best for plant growth.

G. Subgrade: Surface or elevation of subsoil remaining after excavation is complete or top surface of a fill or backfill before planting soil is placed.

H. Subsoil: All soil beneath the topsoil layer of the soil profile, and typified by the lack of organic matter and soil organisms.

I. Surface Soil: Soil that is present at the top layer of the existing soil profile at the Project site. In undisturbed areas, the surface soil is typically topsoil, but in disturbed areas such as urban environments, the surface soil can be subsoil.

1.04 SUBMITTALS

A. Product Data: For each type of product indicated.
   1. Pesticides and Herbicides: Include product label and manufacturer's application instructions specific to this Project.

B. Certification of Grass Seed: From seed vendor for each grass-seed monostand or mixture stating the botanical and common name, percentage by weight of each species and variety, and

percentage of purity, germination, and weed seed. Include the year of production and date of packaging.

1. Certification of each seed mixture for turfgrass sod. Include identification of source and name and telephone number of supplier.

C. Conformance Submittal: Submit Installer's Qualifications as indicated prior to beginning work for qualified landscape installer.

D. Product Certificates: For soil amendments and fertilizers, from manufacturer.

E. Material Test Reports: For standardized ASTM D 5268 topsoil and imported or manufactured topsoil.

1.05 QUALITY ASSURANCE

A. Installer Qualifications: A qualified landscape Installer whose work has resulted in successful turf establishment.

1. Professional Membership: Installer shall be a member in good standing of either the American Landscape Contractors Association or the American Nursery and Landscape Association.
2. Registration. Installer shall be a Registered Landscape Contractor (where applicable).
3. Experience: Five years' experience in turf installation in addition to requirements in Division 2 Section "Quality Requirements."
4. Installer's Field Supervision: Require Installer to maintain an experienced full-time supervisor on Project site when work is in progress.
5. Maintenance Proximity: Not more than two hours' normal travel time from Installer's place of business to Project site.
6. Pesticide Applicator: State licensed, commercial.

B. Soil-Testing Laboratory Qualifications: An independent laboratory or university laboratory, recognized by the State Department of Agriculture, with the experience and capability to conduct the testing indicated and that specializes in types of tests to be performed.

C. Soil Analysis: For each unamended soil type, furnish soil analysis and a written report by a qualified soil-testing laboratory stating percentages of organic matter; gradation of sand, silt, and clay content; cation exchange capacity; deleterious material; pH; and mineral and plant-nutrient content of the soil.

1. Testing methods and written recommendations shall comply with USDA's Handbook No. 60.
2. The soil-testing laboratory shall oversee soil sampling, with depth, location, and number of samples to be taken per instructions from Architect. A minimum of three representative samples shall be taken from varied locations for each soil to be used or amended for planting purposes.
3. Report suitability of tested soil for turf growth.
    a. Based on the test results, state recommendations for soil treatments and soil amendments to be incorporated. State recommendations in weight per 1000 sq. ft. (92.9 sq. m) or volume per cu. yd. (0.76 cu. m) for nitrogen, phosphorus, and potash nutrients and soil amendments to be added to produce satisfactory planting soil suitable for healthy, viable plants.
    b. Report presence of problem salts, minerals, or heavy metals, including aluminum, arsenic, barium, cadmium, chromium, cobalt, lead, lithium, and vanadium. If such problem materials are present, provide additional recommendations for corrective action.

1.06 DELIVERY, STORAGE, AND HANDLING

A. Seed and Other Packaged Materials: Deliver packaged materials in original, unopened containers showing weight, certified analysis, name and address of manufacturer, and indication of conformance with state and federal laws, as applicable.

B. Sod: Harvest, deliver, store, and handle sod according to requirements in "Specifications for Turfgrass Sod Materials" and "Specifications for Turfgrass Sod Transplanting and Installation" in TPI's "Guideline Specifications to Turfgrass Sodding." Deliver sod in time for planting within 24 hours of harvesting. Protect sod from breakage and drying.

C. Fertilizer: Deliver to site in original unopened standard size bags showing weight, analysis and name of manufacturer. Store in weatherproof place and keep dry to maintain effectiveness. Store partially used bags in sealed containers.

D. Bulk Materials:
   1. Do not dump or store bulk materials near structures, utilities, walkways and pavements, or on existing turf areas or plants.
   2. Provide perimeter-control measures to prevent displacement of bulk materials, discharge of soil-bearing water runoff, and airborne dust reaching adjacent properties, water conveyance systems, or walkways.
   3. Accompany each delivery of bulk fertilizers and soil amendments with appropriate certificates.

1.07 PROJECT CONDITIONS

A. Planting Restrictions: See drawings for planting periods and specific species for specific planting dates.

B. Weather Limitations: Proceed with planting only when existing and forecasted weather conditions permit planting to be performed when beneficial and optimum results may be obtained. Apply products during favorable weather conditions according to manufacturer's written instructions.

1.08 MAINTENANCE SERVICE

A. Initial Turf Maintenance Service: Provide full maintenance by skilled employees of landscape Installer. Maintain as required in Part 3. Begin maintenance immediately after each area is planted and continue until acceptable turf is established but for not less than the following periods:
   1. Seeded Turf: 60 days from date of planting completion.
      a. When initial maintenance period has not elapsed before end of planting season, or if turf is not fully established, continue maintenance during next planting season.
   2. Sodded Turf: 30 days from date of installation.
   3. Plugged and Sprigged Turf: 60 days from date of planting completion.

B. Continuing Maintenance Proposal: From Installer to Owner, in the form of a standard yearly (or other period) maintenance agreement, starting on date initial maintenance service is concluded. State services, obligations, conditions, and terms for agreement period and for future renewal options. Include with Maintenance Service Proposal as defined in Division 21 Section 329300 Part 1.10.

PART 2 - PRODUCTS

2.01 SEED

A. Grass Seed: Fresh, clean, dry, new-crop seed complying with AOSA's "Journal of Seed Technology; Rules for Testing Seeds" for purity and germination tolerances.

B. Seed Species: State-certified seed of grass species as indicated on the drawings, with not less than 95 percent germination, not less than 85 percent pure seed, and not more than 0.5 percent weed seed:

C. Grass Seed Mix: Proprietary seed mix as indicated on the drawings.

2.02 TURFGRASS SOD

A. Turfgrass Sod: Certified, complying with "Specifications for Turfgrass Sod Materials" in TPI's "Guideline Specifications to Turfgrass Sodding." Furnish viable sod of uniform density, color, and texture, strongly rooted, and capable of vigorous growth and development when planted.

B. Turfgrass Species: Shall be as indicated on the drawings or as approved by the Owner.

C. Turfgrass Species: Sod of grass species (from seed at sod farm) as follows, with not less than 95 percent germination, not less than 85 percent pure seed, and not more than 0.5 percent weed seed:

2.03 PLUGS

A. Plugs: Turfgrass sod, certified, complying with "Specifications for Turfgrass Sod Materials" in TPI's "Guideline Specifications to Turfgrass Sodding." Furnish viable sod of uniform density, color, and texture, cut into square or round plugs, strongly rooted, and capable of vigorous growth and development when planted; of the following turfgrass species and plug size:

1. Turfgrass Species: Shall be as indicated on the drawings.
2. Plug Size: Shall be as indicated on the drawings.

2.04 SPRIGS

A. Sod Sprigs: Healthy living stems, rhizomes, or stolons with a minimum of two nodes and attached roots free of soil, of the following turfgrass species:
   1. Turfgrass Species: Shall be as indicated on the drawings.
   2. Turfgrass Species: Shall be as indicated on the drawings.

2.05 MEADOW GRASSES AND WILDFLOWERS

A. Wildflower Seed: Fresh, clean, and dry new seed, of mixed species as follows:
   1. Species as identified on drawings.
B. Native Grass Seed: Fresh, clean, and dry new seed, of mixed species as follows:
   1. Species as identified on drawings.
C. Wildflower and Native Grass Seed: Fresh, clean, and dry new seed, of mixed species as follows:
   1. Species as identified on drawings.
D. Seed Carrier: Inert material, sharp clean sand or perlite, mixed with seed at a ratio of not less than two parts seed carrier to one part seed.

2.06 INORGANIC SOIL AMENDMENTS

A. Lime: ASTM C 602, agricultural liming material containing a minimum of 80 percent calcium carbonate equivalent and as follows:
   1. Class: T, with a minimum of 99 percent passing through No. 8 (2.36-mm) sieve and a minimum of 75 percent passing through No. 60 (0.25-mm) sieve.
   2. Class: O, (only in high wind areas) with a minimum of 95 percent passing through No. 8 (2.36-mm) sieve and a minimum of 55 percent passing through No. 60 (0.25-mm) sieve.
   3. Provide lime in form of ground dolomitic limestone.
B. Sulfur: Granular, biodegradable, containing a minimum of 90 percent sulfur, and with a minimum of 99 percent passing through No. 6 (3.35-mm) sieve and a maximum of 10 percent passing through No. 40 (0.425-mm) sieve.
C. Iron Sulfate: Granulated ferrous sulfate containing a minimum of 20 percent iron and 10 percent sulfur.
D. Aluminum Sulfate: Commercial grade, unadulterated.
E. Perlite: Horticultural perlite, soil amendment grade.
F. Agricultural Gypsum: Minimum 90 percent calcium sulfate, finely ground with 90 percent passing through No. 50 (0.30-mm) sieve.
G. Sand: Clean, washed, natural or manufactured, and free of toxic materials.

2.07 ORGANIC SOIL AMENDMENTS

A. Compost: Well-composted, stable, and weed-free organic matter, pH range of 5.5 to 8; moisture content 35 to 55 percent by weight; 100 percent passing through 1-inch (25-mm) sieve; soluble salt content of 2 to 5 decisiemens/m; not exceeding 0.5 percent inert contaminants and free of substances toxic to plantings; and as follows:
   1. Organic Matter Content: 50 percent of dry weight.
B. Sphagnum Peat: Partially decomposed sphagnum peat moss, finely divided or of granular texture, with a pH range of 3.4 to 4.8.
C. Wood Derivatives: Decomposed, nitrogen-treated sawdust, ground bark, or wood waste; of uniform texture and free of chips, stones, sticks, soil, or toxic materials.
D. Manure: Well-rotted, unleached, stable or cattle manure containing not more than 25 percent by volume of straw, sawdust, or other bedding materials; free of toxic substances, stones, sticks, soil, weed seed, and material harmful to plant growth.

2.08 FERTILIZERS

A. Bonemeal: Commercial, raw or steamed, finely ground; a minimum of 1 percent nitrogen and 10 percent phosphoric acid.
B. Superphosphate: Commercial, phosphate mixture, soluble; a minimum of 20 percent available phosphoric acid.

C. Commercial Fertilizer: Commercial-grade complete fertilizer of neutral character, consisting of fast- and slow-release nitrogen, 50 percent derived from natural organic sources of urea formaldehyde, phosphorous, and potassium in the following composition:
   1. Composition: 1 lb/1000 sq. ft. (0.45 kg/92.9 sq. m) of actual nitrogen, 4 percent phosphorous, and 2 percent potassium, by weight unless recommended in soil reports from a qualified soil-testing laboratory or as specified on the drawings.

D. Slow-Release Fertilizer: Granular or pelleted fertilizer consisting of 50 percent water-insoluble nitrogen, phosphorus, and potassium in the following composition:
   1. Composition: 20 percent nitrogen, 10 percent phosphorous, and 10 percent potassium, by weight, unless recommended in soil reports from a qualified soil-testing laboratory or as specified on the drawings.

2.09 PLANTING SOILS

A. Planting Soil: ASTM D 5268 topsoil, with pH range of 5.5 to 7, a minimum of 6 percent organic material content; free of stones 1 inch (25 mm) or larger in any dimension and other extraneous materials harmful to plant growth. Mix ASTM D 5268 topsoil with the following soil amendments in the following quantities to produce planting soil:
   1. Ratio of Loose Compost to Topsoil by Volume: 1:4.

B. Planting Soil: Existing, native surface topsoil formed under natural conditions with the duff layer retained during excavation process and stockpiled on-site. Verify suitability of native surface topsoil to produce viable planting soil. Clean soil of roots, plants, sod, stones, clay lumps, and other extraneous materials harmful to plant growth.
   1. Supplement with native surface (topsoil) planting soil when quantities are insufficient.
   2. Mix existing, native surface topsoil with the following soil amendments in the following quantities to produce planting soil:
      a. Ratio of Loose Compost to Topsoil by Volume: 1:4.
      b. Ratio of Loose Sphagnum 1:4.

C. Planting Soil: Existing, in-place surface soil. Verify suitability of existing surface soil to produce viable planting soil. Remove stones, roots, plants, sod, clods, clay lumps, pockets of coarse sand, concrete slurry, concrete layers or chunks, cement, plaster, building debris, and other extraneous materials harmful to plant growth. Mix surface soil with the following soil amendments in the following quantities to produce planting soil:
   1. Ratio of Loose Compost to Surface Soil by Volume: 1:3.

D. Imported Planting Soil: Imported topsoil or manufactured topsoil from off-site sources. Obtain topsoil displaced from naturally well-drained construction or mining sites where topsoil occurs at least 4 inches (100 mm) deep; do not obtain from agricultural land**,** bogs or marshes.
   1. Additional Properties of Imported Topsoil or Manufactured Topsoil: Screened and free of stones 1 inch (25 mm) or larger in any dimension; free of roots, plants, sod, clods, clay lumps, pockets of coarse sand, paint, paint washout, concrete slurry, concrete layers or chunks, cement, plaster, building debris, oils, gasoline, diesel fuel, paint thinner, turpentine, tar, roofing compound, acid, and other extraneous materials harmful to plant growth; free of obnoxious weeds and invasive plants including quackgrass, Johnsongrass, poison ivy, nutsedge, nimblewill, Canada thistle, bindweed, bentgrass, wild garlic, ground ivy, perennial sorrel, and bromegrass; not infested with nematodes, grubs, other pests, pest eggs, or other undesirable organisms and disease-causing plant pathogens; friable and with sufficient structure to give good tilth and aeration. Continuous, air-filled, pore-space content on a volume/volume basis shall be at least 15 percent when moisture is present at field capacity. Soil shall have a field capacity of at least 15 percent on a dry weight basis.
   2. Mix imported topsoil or manufactured topsoil with the following soil amendments in the following quantities to produce planting soil:
      a. Ratio of Loose Compost to Topsoil by Volume: 1:4.

2.10 MULCHES

A. Straw Mulch: Provide air-dry, clean, mildew- and seed-free, salt hay or threshed straw of wheat, rye, oats, or barley.

B. Compost Mulch: Well-composted, stable, and weed-free organic matter, pH range of 5.5 to 8; moisture content 35 to 55 percent by weight; 100 percent passing through 1-inch (25-mm) sieve; soluble salt content of 2 to 5 decisiemens/m; not exceeding 0.5 percent inert contaminants and free of substances toxic to plantings; and as follows:
   1. Organic Matter Content: 50 to 60 percent of dry weight.
C. Fiber Mulch: Biodegradable, dyed-wood, cellulose-fiber mulch; nontoxic and free of plant-growth or germination inhibitors; with a maximum moisture content of 15 percent and a pH range of 4.5 to 6.5.
D. Non-asphaltic Tackifier: Colloidal tackifier recommended by fiber-mulch manufacturer for slurry application; nontoxic and free of plant-growth or germination inhibitors.
E. Asphalt Emulsion: NOT PERMITTED.

2.11 PESTICIDES

A. General: Pesticide, registered and approved by EPA, acceptable to authorities having jurisdiction, and of type recommended by manufacturer for each specific problem and as required for Project conditions and application. Do not use restricted pesticides unless authorized in writing by authorities having jurisdiction.
B. Pre-Emergent Herbicide (Selective and Non-Selective): Effective for controlling the germination or growth of weeds within planted areas at the soil level directly below the mulch layer.
C. Post-Emergent Herbicide (Selective and Non-Selective): Effective for controlling weed growth that has already germinated.

2.12 EROSION-CONTROL MATERIALS

A. Rolled Erosion-Control Blankets (RECP): Biodegradable wood excelsior, straw, or coconut-fiber mat enclosed in a photodegradable plastic mesh. Include manufacturer's recommended steel wire staples, 6 inches (150 mm) long.
B. Erosion-Control Fiber Mesh: Biodegradable burlap or spun-coir mesh, a minimum of 0.92 lb/sq. yd. (0.5 kg/sq. m), with 50 to 65 percent open area. Include manufacturer's recommended steel wire staples, 6 inches (150 mm) long.
C. Turf Reinforcement Mats (TRM): Cellular, non-biodegradable slope-stabilization mats designed to isolate and contain small areas of soil over steeply sloped surface, thickness as detailed on the drawings. Include manufacturer's recommended anchorage system for slope conditions.
   1. Products: See drawings and details,

2.13 GRASS-PAVING MATERIALS

A. Grass Paving: Cellular, non-biodegradable plastic mats, designed to contain small areas of soil and enhance the ability of turf to support vehicular and pedestrian traffic, see plan and details for mat thickness. Include manufacturer's recommended anchorage system for slope conditions.
   1. Products: See drawings and details.
B. Base Course: Sound crushed stone or gravel complying with [ASTM D 448 for Size No. 8] Division 2 Section "Earthwork" for base-course material.
C. Sand: Sound, sharp, washed natural sand or crushed stone complying with gradation requirements in ASTM C 33 for fine aggregate.
D. Proprietary Growing Mix: As shown on the drawings or submitted and acceptable to Owner.
E. Sandy Loam Soil Mix: Sound, sharp, washed, natural sand or crushed stone complying with gradation requirements in ASTM C 33 for fine aggregate blended with planting soil as specified. Use blend consisting of 1/2 sand and 1/2 planting soil.
F. Soil for Paving Fill: Planting soil as specified on the drawings.

PART 3 - EXECUTION

3.01 EXAMINATION

A. Examine areas to be planted for compliance with requirements and other conditions affecting performance.

1. Verify that no foreign or deleterious material or liquid such as paint, paint washout, concrete slurry, concrete layers or chunks, cement, plaster, oils, gasoline, diesel fuel, paint thinner, turpentine, tar, roofing compound, or acid has been deposited in soil within a planting area.
2. Do not mix or place soils and soil amendments in frozen, wet, or muddy conditions.
3. Suspend soil spreading, grading, and tilling operations during periods of excessive soil moisture until the moisture content reaches acceptable levels to attain the required results.
4. Uniformly moisten excessively dry soil that is not workable and which is too dusty.

B. Proceed with installation only after unsatisfactory conditions have been corrected.

C. If contamination by foreign or deleterious material or liquid is present in soil within a planting area, remove the soil and contamination as directed by Owner and replace with new planting soil.

3.02 PREPARATION

A. Protect structures, utilities, sidewalks, pavements, and other facilities, trees, shrubs, and plantings from damage caused by planting operations.
1. Protect adjacent and adjoining areas from hydroseeding and hydromulching overspray.
2. Protect grade stakes set by others until directed to remove them.

B. Install erosion-control measures to prevent erosion or displacement of soils and discharge of soil-bearing water runoff or airborne dust to adjacent properties and walkways.

3.03 TURF AREA PREPARATION

A. Limit turf subgrade preparation to areas to be planted.

B. Newly Graded Subgrades: Loosen subgrade to a minimum depth of 6 inches (150 mm). Remove stones larger than 1 inch (25 mm) in any dimension and sticks, roots, rubbish, and other extraneous matter and legally dispose of them off Owner's property.
1. Apply superphosphate fertilizer directly to subgrade before loosening.
2. Spread topsoil, apply soil amendments and fertilizer on surface, and thoroughly blend planting soil.
   a. Delay mixing fertilizer with planting soil if planting will not proceed within a few days.
   b. Mix lime with dry soil before mixing fertilizer.
3. Spread planting soil to a depth of 6 inches (150 mm) but not less than required to meet finish grades after light rolling and natural settlement. Do not spread if planting soil or subgrade is frozen, muddy, or excessively wet.
   a. Spread approximately 1/2 the thickness of planting soil over loosened subgrade. Mix thoroughly into top 2 inches (50 mm) of subgrade. Spread remainder of planting soil.
   b. Reduce elevation of planting soil to allow for soil thickness of sod where used.

C. Unchanged Subgrades: If turf is to be planted in areas unaltered or undisturbed by excavating, grading, or surface-soil stripping operations, prepare surface soil as follows:
1. Remove existing grass, vegetation, and turf. Do not mix into surface soil.
2. Loosen surface soil to a depth of at least 8 inches (200 mm). Apply soil amendments and fertilizers according to planting soil mix proportions and mix thoroughly into top 4 inches (100 mm) of soil. Till soil to a homogeneous mixture of fine texture.
   a. Apply superphosphate fertilizer directly to surface soil before loosening.
3. Remove stones larger than 1 inch (25 mm) in any dimension and sticks, roots, trash, and other extraneous matter.
4. Legally dispose of waste material, including grass, vegetation, and turf, off Owner's property.

D. Finish Grading: Grade planting areas to a smooth, uniform surface plane with loose, uniformly fine texture. Grade to within plus or minus 1/2 inch (13 mm) of finish elevation. Roll and rake, remove ridges, and fill depressions to meet finish grades. Limit finish grading to areas that can be planted in the immediate future. All turf areas shall slope to drain

E. Moisten prepared area before planting if soil is dry. Water thoroughly and allow surface to dry before planting. Do not create muddy soil.

F. Before planting, obtain Architect's acceptance of finish grading; restore planting areas if eroded or otherwise disturbed after finish grading.

3.04 PREPARATION FOR EROSION-CONTROL MATERIALS

A. Prepare area as specified in "Turf Area Preparation" Article.

B. For turf reinforcement mats (TRM), install planting soil in two lifts, with second lift equal to thickness of erosion-control mats. Install erosion-control mat and fasten as recommended by material manufacturer.
C. Fill cells of turf reinforcement mat with planting soil and compact before planting.
D. For rolled erosion-control blanket (RECP) or mesh, seed area, install RECP from top of slope, working downward, and as recommended by material manufacturer for site conditions and as shown on the details. Fasten as recommended by material manufacturer.
E. Moisten prepared area before planting if surface is dry. Water thoroughly and allow surface to dry before planting. Do not create muddy soil.

3.05 PREPARATION FOR GRASS-PAVING MATERIALS

A. Reduce subgrade elevation soil to allow for thickness of grass-paving system. Grade planting areas to a smooth, uniform surface plane with loose, uniformly fine texture. Grade so that installed paving is within plus or minus 1/2 inch (13 mm) of finish elevation. Roll and rake, remove ridges, and fill depressions.
B. Install base course (sand, soil mix, proprietary growing mix, or soil for paving fill) as shown on drawings) and as recommended by paving-material manufacturer for site conditions; comply with details shown on Drawings. Compact according to paving-material manufacturer's written instructions.
C. Install paving mat and fasten according to paving-material manufacturer's written instructions.
D. Before planting, fill cells of paving mat with planting soil mix as shown on the drawings and compact according to manufacturer's written instructions.
E. Moisten prepared area before planting if surface is dry. Water thoroughly and allow surface to dry before planting. Do not create muddy soil.

3.06 SEEDING

A. Sow seed with spreader or seeding machine. Do not broadcast or drop seed when wind velocity exceeds 5 mph (8 km/h). Evenly distribute seed by sowing equal quantities in two directions at right angles to each other.
   1. Do not use wet seed or seed that is moldy or otherwise damaged.
   2. Do not seed against existing trees. Limit extent of seed to outside edge of planting saucer.
B. Sow seed at a total rate as indicated on the drawings.
C. Rake seed lightly into top 1/8 inch (3 mm) of soil, roll lightly, and water with fine spray.
D. Protect seeded areas with slopes exceeding 3:1 with RECP installed and stapled according to manufacturer's written instructions.
E. Protect seeded areas with turf reinforcement mats where shown on Drawings; install and anchor according to manufacturer's written instructions.
F. Protect seeded areas with slopes not exceeding 3:1 and not indicated to receive RECP or TRM by spreading straw mulch. Spread uniformly at a minimum rate of 2 tons/acre (42 kg/92.9 sq. m) to form a continuous blanket in loose thickness over seeded areas. Spread by hand, blower, or other suitable equipment.
   1. Anchor straw mulch by crimping into soil with suitable mechanical equipment, or bond by spraying with approved tackifier at rate specified by manufacturer.
G. Protect seeded areas from hot, dry weather or drying winds by applying specified mulch within 24 hours after completing seeding operations. Water and soak areas, scatter mulch uniformly and roll surface smooth.

3.07 HYDROSEEDING

A. Hydroseeding: Mix specified seed, fertilizer, and fiber mulch in water, using equipment specifically designed for hydroseed application. Continue mixing until uniformly blended into homogeneous slurry suitable for hydraulic application.
   1. Mix slurry with non-asphaltic fiber-mulch, or manufacturer's recommended tackifier.
   2. Apply slurry uniformly to all areas to be seeded in a two-step process. Apply first slurry coat at a rate so that mulch component is deposited at not less than 500-lb/acre (5.2-kg/92.9 sq. m) dry weight, and seed component is deposited at not less than the specified seed-sowing rate. Apply slurry cover coat of fiber mulch (hydromulching) as indicated on the drawings or at a rate of 1000 lb/acre (10.4 kg/92.9 sq. m).

3.08 SODDING

A. Area: Shall be as indicated on the drawings or at minimum a three (3) foot wide strip along walks, roadways and parking areas to reduce erosion.
B. Lay sod within 24 hours of harvesting. Do not lay sod if dormant or if ground is frozen or muddy.
C. Lay sod to form a solid mass with tightly fitted joints. Butt ends and sides of sod; do not stretch or overlap. Stagger sod strips or pads to offset joints in adjacent courses. Avoid damage to subgrade or sod during installation. Tamp and roll lightly to ensure contact with subgrade, eliminate air pockets, and form a smooth surface. Work sifted soil or fine sand into minor cracks between pieces of sod; remove excess to avoid smothering sod and adjacent grass.
    1. Lay sod across angle of slopes exceeding 4:1.
    2. Anchor sod on slopes exceeding 6:1 with steel staples spaced as recommended by sod manufacturer but not less than 2 anchors per sod strip to prevent slippage.
D. Saturate sod with fine water spray within two hours of planting. During first week after planting, water daily or more frequently as necessary to maintain moist soil to a minimum depth of 1-1/2 inches (38 mm) below sod.

3.09 PLUGGING

A. Plant plugs in holes or furrows, spaced as indicated on the drawings. On slopes, contour furrows to near level.

3.10 SPRIGGING

A. Plant freshly shredded sod sprigs in furrows as indicated on drawings. Place individual sprigs with roots and portions of stem in moistened soil, as indicated, and fill furrows without covering growing tips. Lightly roll and firm soil around sprigs after planting.
B. Broadcast Method: If broadcast method is indicated on drawings, spread sprigs uniformly over prepared surface at rate indicated and mechanically force sprigs into lightly moistened soil.
    1. Spread a 1/4-inch- (6-mm-) thick layer of planting soil on sprigs.
    2. Lightly roll and firm soil around sprigs after planting.
    3. Water sprigs immediately after planting and keep moist by frequent watering until well rooted.

3.11 TURF RENOVATION

A. Renovate existing turf.
B. Renovate existing turf damaged by Contractor's operations, such as storage of materials or equipment and movement of vehicles.
    1. Reestablish turf where settlement or washouts occur or where minor regrading is required.
    2. Install new planting soil as required.
C. Remove sod and vegetation from diseased or unsatisfactory turf areas; do not bury in soil.
D. Remove topsoil containing foreign materials such as oil drippings, fuel spills, stones, gravel, and other construction materials resulting from Contractor's operations, and replace with new planting soil.
E. Mow, dethatch, core aerate, and rake existing turf.
F. Remove weeds before seeding. Where weeds are extensive, apply selective herbicides as required. Do not use pre-emergence herbicides.
G. Remove waste and foreign materials, including weeds, soil cores, grass, vegetation, and turf, and legally dispose of them off Owner's property.
H. Till stripped, bare, and compacted areas thoroughly to a soil depth of 6 inches (150 mm).
I. Apply soil amendments and initial fertilizers required for establishing new turf and mix thoroughly into top 4 inches (100 mm) of existing soil. Install new planting soil to fill low spots and meet finish grades.
J. Apply seed and protect with straw mulch, or sod as required for new turf.
K. Water newly planted areas and keep moist until new turf is established.

3.12 TURF MAINTENANCE

A. Maintain and establish turf by watering, fertilizing, weeding, mowing, trimming, replanting, and performing other operations as required to establish healthy, viable turf. Roll, regrade, and replant bare or eroded areas and remulch to produce a uniformly smooth turf. Provide materials and installation the same as those used in the original installation.

1. Fill in as necessary soil subsidence that may occur because of settling or other processes. Replace materials and turf damaged or lost in areas of subsidence.
2. In areas where mulch has been disturbed by wind or maintenance operations, add new mulch and anchor as required to prevent displacement.
3. Apply treatments as required to keep turf and soil free of pests and pathogens or disease. Use integrated pest management practices whenever possible to minimize the use of pesticides and reduce hazards.

B. Watering: Water to keep turf uniformly moist to a depth of 6 inches (150 mm).
1. Watering shall be done in such a manner and as frequently as deemed necessary by the Owner to assure continued growth of healthy grass.
2. Schedule watering to prevent wilting, puddling, erosion, and displacement of seed or mulch. Lay out temporary watering system to avoid walking over muddy or newly planted areas.
3. Water turf with fine spray at a minimum rate of 1 inch (25 mm) per week unless rainfall precipitation is adequate.
4. Owner will provide water, if available on-site, if not available on-site the Contractor shall provide all necessary water. The Contractor shall furnish all labor, fuel and equipment necessary and required to transport and apply water to the turf areas as required.

C. Protection: Protect seeded or sod area from trespass during grass establishment. Furnish and install fences, signs, and barriers or any other necessary temporary protective devices. Damage resulting from trespass, erosion, settlement, or other causes shall be repaired at the Contractor's expense. All temporary measures must be removed prior to final acceptance.

D. Mow turf as soon as top growth is tall enough to cut. Repeat mowing to maintain specified height without cutting more than 1/3 of grass height. Remove no more than 1/3 of grass-leaf growth in initial or subsequent mowing. Do not delay mowing until grass blades bend over and become matted. Do not mow when grass is wet. Schedule initial and subsequent mowing to maintain the following grass height:
1. Bentgrass to a height of 1 inch (26 mm) or less.
2. Bermuda grass to a height of 1 to 1-1/2 inch (26 to 40 mm).
3. Centipedegrass, perennial ryegrass and zoysiagrass to a height of 1 to 2 inches (25 to 50 mm).
4. Kentucky bluegrass, buffalograss and red fescue to a height of 1-1/2 to 2 inches (38 to 50 mm).
5. Bahiagrass, turf-type tall fescue, and St Augistine grass to a height of 2 to 3 inches (50 to 75 mm).

E. Turf Post fertilization: Apply fertilizer after initial mowing and when grass is dry.
1. Use fertilizer that will provide actual nitrogen of at least 1 lb/1000 sq. ft. (0.45 kg/92.9 sq. m) to turf area.

3.13 SATISFACTORY TURF

A. Turf installations shall meet the following criteria as determined by Owner:
1. Satisfactory Seeded Turf: At end of maintenance period, a healthy, uniform, close stand of grass has been established, free of weeds and surface irregularities, with uniform coverage exceeding 85 percent perennial vegetative cover.
2. Satisfactory Sodded Turf: At end of maintenance period, a healthy, well-rooted, even-colored, viable turf has been established, free of weeds, open joints, bare areas, and surface irregularities.
3. Satisfactory Plugged Turf: At end of maintenance period, the required number of plugs has been established as well-rooted, viable patches of grass, and areas between plugs are free of weeds and other undesirable vegetation.
4. Satisfactory Sprigged Turf: At end of maintenance period, the required number of sprigs has been established as well-rooted, viable plants, and areas between sprigs are free of weeds and other undesirable vegetation.

B. After grass growth has started all areas or parts of areas, which fail to show a uniform stand of grass for any reason whatsoever shall be re-seeded repeatedly until all areas are covered with a satisfactory growth of grass at no additional cost to the Owner.

C. Use specified materials to reestablish turf that does not comply with requirements and continue maintenance until turf is satisfactory.

3.14 MEADOW GRASSES AND WILDFLOWERS

A. Sow seed with spreader or seeding machine. Do not broadcast or drop seed when wind velocity exceeds 5 mph (8 km/h). Evenly distribute seed by sowing equal quantities in two directions at right angles to each other.
   1. Do not use wet seed or seed that is moldy or otherwise damaged.
B. Sow seed at a total rate as shown on the drawings.
C. Brush seed into top 1/16 inch (1.6 mm) of soil, roll lightly, and water with fine spray.
D. Protect seeded areas from hot, dry weather or drying winds by applying compost or straw mulch within 24 hours after completing seeding operations. Soak areas, scatter mulch uniformly to a thickness of 3/16 inch (4.8 mm), and roll surface smooth.
E. Water newly planted areas and keep moist until meadow is established.

3.15 MEADOW GRASSES AND WILDFLOWER MAINTENANCE

A. Maintain and establish meadow by watering, weeding, mowing, trimming, replanting, and performing other operations as required to establish a healthy, viable meadow. Roll, regrade, and replant bare or eroded areas and remulch. Provide materials and installation the same as those used in the original installation.
   1. Fill in as necessary soil subsidence that may occur because of settling or other processes. Replace materials and meadow damaged or lost in areas of subsidence.
   2. In areas where mulch has been disturbed by wind or maintenance operations, add new mulch and anchor as required to prevent displacement.
   3. Apply treatments as required to keep meadow and soil free of pests and pathogens or disease. Use integrated pest management practices whenever possible to minimize the use of pesticides and reduce hazards.
B. Watering: If indicated on the drawings, install and maintain temporary piping, hoses, and meadow-watering equipment to convey water from sources and to keep meadow uniformly moist.
   1. Schedule watering to prevent wilting, puddling, erosion, and displacement of seed or mulch. Lay out temporary watering system to avoid walking over muddy or newly planted areas.
   2. Water meadow with fine sprays at a minimum rate of 1/2 inch (13 mm) per week until final acceptance unless rainfall precipitation is adequate.

3.16 PESTICIDE APPLICATION

A. Apply pesticides and other chemical products and biological control agents in accordance with requirements of authorities having jurisdiction and manufacturer's written recommendations. Coordinate applications with Owner's operations and others in proximity to the Work. Notify Owner before each application is performed.
B. Post-Emergent Herbicides (Selective and Non-Selective): Apply only as necessary to treat already-germinated weeds and in accordance with manufacturer's written recommendations.

3.17 CLEANUP AND PROTECTION

A. Promptly remove soil and debris created by turf work from paved areas. Clean wheels of vehicles before leaving site to avoid tracking soil onto roads, walks, or other paved areas.
B. Erect temporary fencing or barricades and warning signs as required to protect newly planted areas from traffic. Maintain fencing and barricades throughout initial maintenance period and remove after plantings are established.
C. Remove nondegradable erosion-control measures after grass establishment period.

END OF SECTION 329200

SECTION 33 10 00

FACILITY WATER DISTRIBUTION PIPING

PART 1 - GENERAL

1.01 RELATED DOCUMENTS

A. Drawings and general provisions of the Contract, including General and Supplementary Conditions and Division 31 Section 312000 “Earth Moving”, apply to this Section.

1.02 SUMMARY

A. This Section includes water-distribution piping and related components outside the building from tapping the main to:
   1. Within 5 feet of outside the building limits for domestic and irrigation water service
   2. 1 foot above finished floor elevation for the fire service mains
   3. Supply and discharge piping including connections to fire protection water tank if shown on the plans..

B. All work shall conform to the requirements of the local water authority, fire marshal, and other regulatory authorities having jurisdiction, or this specification, whichever is more stringent.

C. Utility-furnished products include water meters that will be furnished to the site, ready for installation.

1.03 DEFINITIONS

A. EPDM: Ethylene propylene diene terpolymer rubber.
B. LLDPE: Linear, low-density polyethylene plastic.
C. PA: Polyamide (nylon) plastic.
D. PE: Polyethylene plastic.
E. PP: Polypropylene plastic.
F. PVC: Polyvinyl chloride plastic.
G. RTRF: Reinforced thermosetting resin (fiberglass) fittings.
H. RTRP: Reinforced thermosetting resin (fiberglass) pipe.

1.04 REFERENCE STANDARDS

A. Factory Mutual (FM)
   1. Approval Guide

B. Underwriters Laboratories (UL)
   1. Fire Protection Equipment Directory
   2. UL 1285 - Pipe and Couplings, Polyvinyl Chloride (PVC), for Underground Fire Service
   3. UL 262 - Gate Valves for Fire-Protection Service
   4. UL 246 - Hydrants for Fire-Protection Service

C. National Sanitation Foundation (NSF)
   1. NSF 14 - Plastics Piping System Components and Related Materials
   2. NSF 61 - Drinking Water System Components - Health Effects

D. National Fire Protection Association (NFPA)
   1. NFPA 70 - National Electrical Code
   2. NFPA 24 - Standard for the Installation of Private Fire Service Mains and their Appurtenances
   3. NFPA 1963 - Screw Threads and Gaskets for Fire Hose Connections (revision of ANSI/NFPA 1963-1993)
   4. NFPA 13 – Installation of Sprinkler Systems (latest edition)

E. American Water Works Association (AWWA)
   1. C151 Ductile-Iron Pipe, Centrifugally Cast, for Water (revision of ANSI/AWWA C151/A21.51-91)
   2. C104 - Cement-Mortar Lining for Ductile-Iron Pipe and Fittings for Water

3. C150 - Thickness Design of Ductile-Iron Pipe
4. C110 - Ductile-Iron and Gray-Iron Fittings, 3 in through 48 in (75 mm through 1200 mm), for Water and Other Liquids
5. C153 - Ductile-Iron Compact Fittings, 3 in. through 24 in. (76 mm Through 610 mm) and 54 in. through 64 in. (1,400 mm Through 1,600 mm), for Water Service
6. C900 - Polyvinyl Chloride (PVC) Pressure Pipe, 4 Inch through 12 Inch for Water Distribution
7. C500 - Gate Valves for Water and Sewage Systems
8. C111 - Rubber-Gasket Joints for Ductile-Iron Pressure Pipe and Fittings
9. C550 - Protective Epoxy Interior Coatings for Valves and Hydrants
10. C509 - Resilient-Seated Gate Valves for Water Supply Service
11. M44 – Distribution Valves: Selection, Installation, Field Testing, and Maintenance
12. C800 - Underground Service Line Valves and Fittings
13. C702 - Cold Water Meters - Compound Type
14. C502 - Hydrants, Dry Barrel Fire
15. M41 – Ductile Iron Pipe and Fittings
16. C600 - Installation of Ductile-Iron Water Mains and Their Appurtenances
17. C605 - Water Treatment - Underground Installation of Polyvinyl Chloride PVC Pressure Pipe and Fittings for Water
18. M23 - PVC Pipe: Design and Installation
19. M17 - Fire Hydrants: Installation, Field Testing, and Maintenance
20. C651 - Disinfecting Water Mains

F. American Society for Testing and Materials (ASTM)

1. B88 - Standard Specification for Seamless Copper Water Tube
2. B813 - Standard Specification for Liquid and Paste Fluxes for Soldering Applications of Copper and Copper Alloy Tube
3. B32 - Standard Specification for Solder Metal
4. D2241 - Standard Specification for Poly(Vinyl Chloride) (PVC) Pressure-Rated Pipe (SDR Series)
5. D3139 - Standard Specification for Joints for Plastic Pressure Pipes Using Flexible Elastomeric Seals
6. F645 - Standard Guide for Selection, Design, and Installation of Thermoplastic Water Pressure Piping Systems

G. American Society of Mechanical Engineers (ASME)

1. B16.18 - Cast Copper Alloy Solder Joint Pressure Fittings R(1994)
2. B16.22 - Wrought Copper and Copper Alloy Solder Joint Pressure Fittings

H. Manufacturer's Standardization Society (MSS)

1. SP-60 - Connecting Flange Joint Between Tapping Sleeves and Tapping Valves

I. Copper Development Association (CDA)

1. Copper Tube Handbook

1.05 SUBMITTALS

A. The General Contractor and Subcontractor(s) shall execute the Conformance Submittal(s) at the end of this section.

1.06 QUALITY ASSURANCE

A. Regulatory Requirements:
1. Comply with requirements of regulatory authorities having jurisdiction or the utility company supplying water including tapping of water mains, backflow prevention installation, testing, and disinfection.
2. Comply with standards of authorities having jurisdiction for potable-water-service piping, including materials, installation, testing, and disinfection.
3. Comply with standards of authorities having jurisdiction for fire-suppression water-service piping, including materials, hose threads, installation, and testing.

B. Piping materials shall bear label, stamp, or other markings of specified testing agency.

C. Electrical Components, Devices, and Accessories: UL listed and labeled as defined in NFPA 70, Article 100, by a testing agency acceptable to authorities having jurisdiction, and marked for intended use.
D. Comply with ASTM F 645 for selection, design, and installation of thermoplastic water piping.
E. Comply with FMG's "Approval Guide" or UL's "Fire Protection Equipment Directory" for fire-service-main products.
F. NFPA Compliance: Comply with NFPA 13 and NFPA 24 for materials, installations, tests, flushing, and valve and hydrant supervision for fire-service-main piping for fire suppression.
G. NSF Compliance:
   1. Comply with NSF 14 for plastic potable-water-service piping.
   2. Comply with NSF 61 for materials for water-service piping and specialties for domestic water.

1.07 DELIVERY, STORAGE, AND HANDLING

A. Preparation for Transport: Prepare valves, including fire hydrants, according to the following:
   1. Ensure that valves are dry and internally protected against rust and corrosion.
   2. Protect valves against damage to threaded ends and flange faces.
   3. Set valves in best position for handling. Set valves closed to prevent rattling.
B. During Storage: Use precautions for valves, including fire hydrants, according to the following:
   1. Do not remove end protectors unless necessary for inspection; then reinstall for storage.
   2. Protect from weather. Store indoors and maintain temperature higher than ambient dew-point temperature. Support off the ground or pavement in watertight enclosures when outdoor storage is necessary.
C. Handling: Use sling to handle valves and fire hydrants if size requires handling by crane or lift. Rig valves to avoid damage to exposed parts. Do not use hand wheels or stems as lifting or rigging points.
D. Deliver piping with factory-applied end caps. Maintain end caps through shipping, storage, and handling to prevent pipe-end damage and to prevent entrance of dirt, debris, and moisture.
E. Protect stored piping from moisture and dirt. Elevate above grade. Do not exceed structural capacity of floor when storing inside.
F. Protect flanges, fittings, and specialties from moisture and dirt.
G. Store plastic piping protected from direct sunlight. Support to prevent sagging and bending.

1.08 PROJECT CONDITIONS

A. Removal and Relocation of Existing Utilities: The contractor shall be responsible for removal and/or relocation of existing utilities, where conflicts occur but may or may not be shown on the Drawings, at no additional cost to the Owner.
B. Interruption of Existing Water-Distribution Service: Do not interrupt service to facilities occupied by Owner or others unless permitted under the following conditions and then only after arranging to provide temporary water-distribution service according to requirements indicated:
   1. Notify Owner two (2) days in advance of proposed interruption of service.
   2. Do not proceed with interruption of water-distribution service without Owner's written permission.

1.09 COORDINATION AND FEES

A. The Contractor shall be responsible for obtaining and payment of all tap and construction permit fees associated with this section.
B. The Contractor shall provide and install domestic and irrigation water lines, meters, and appurtenances as shown on the drawings to within 5 feet of building limits, including, but not limited to, any taps, meters, vault, and backflow prevention. If Contractor’s Work terminates at a connection point where work by others is complete, Contractor shall make the connection. If future connections will be required by others, Contractor shall install plugging and marking apparatus as necessary to protect the Work.
C. The Contractor shall provide and install fire service water lines, meters, and appurtenances as shown on drawings to 1 foot above finished floor elevation, including, but not limited to any taps, meters, backflow prevention, hydrants, and free standing fire department connections. If Contractor’s Work terminates at a connection point where work by others is complete, Contractor

shall make the connection. If future connections will be required by others, Contractor shall install plugging and marking apparatus as necessary to protect the Work.

PART 2 - PRODUCTS

2.01 COPPER TUBE AND FITTINGS

A. Soft Copper Tube: NPS 3 inches or smaller; **ASTM B 88, Type K**, annealed temper.
   1. Copper, Solder-Joint Fittings: ASME B16.18, cast-copper-alloy or ASME B16.22, wrought-copper, solder-joint pressure type or ASME B 16.22 for wrought-copper and copper allow, solder joint pressure fitting type. Furnish only wrought-copper fittings if indicated.
   2. Soldering flux shall be in accordance with ASTM B813, water-flushable type.
   3. Solder filler metal shall be in accordance with ASTM B 32, with 0.20 percent maximum lead content.
   4. Copper, Pressure-Seal Fittings:
      a. NPS 2 (DN 50) and Smaller: Wrought-copper fitting with EPDM O-ring seal in each end.
      b. NPS 2-1/2 to NPS 4 (DN 65 to DN 100): Bronze fitting with stainless-steel grip ring and EPDM O-ring seal in each end.

2.02 DUCTILE-IRON PIPE AND FITTINGS

A. Mechanical-Joint, Ductile-Iron Pipe, NPS 3 inches or larger: AWWA C151 Class 350, and shall have a cement-mortar lining of standard thickness in accordance with AWWA C104; pipe thickness shall be in accordance with AWWA C150; pipe shall have push-on joints in accordance with AWWA C110, additional pipe:
   1. Mechanical-Joint, Ductile-Iron Fittings: AWWA C110, ductile- or gray-iron standard pattern or AWWA C153, ductile-iron compact pattern.
   2. Glands, Gaskets, and Bolts: AWWA C111, ductile- or gray-iron glands, rubber gaskets, and steel bolts.
      a. Available Manufacturers: Subject to compliance with requirements, manufacturers offering products that may be incorporated into the Work include, but are not limited to, the following:
      b. Manufacturers: Subject to compliance with requirements, provide products by one of the following:

2.03 PVC PIPE AND FITTINGS

A. Polyvinyl Chloride (PVC) Pipe, NPS 4 inches to NPS 12 inches:

   1. PVC pipe shall conform to the requirements of AWWA C900, Class 150, DR 18. Pipe joints shall be elastomeric joints only. Sleeve couplings are not permitted except as necessary for repairs during testing, or connections to existing mains. Comply with UL 1285 for fire-service mains. Fittings shall be mechanical-joint ductile-iron compact fittings in accordance with AWWA C153 or standard size in accordance with AWWA C110.

B. Polyvinyl Chloride (PVC) Pipe NPS 2 inch to NPS 3 inch:

   1. Pipe shall conform to the requirements of ASTM D2241, SDR 21, with elastomeric joints conforming to ASTM D3139. Pipe jointing shall be by elastomeric joints only. Sleeve couplings are not permitted except as necessary for repairs during testing, or connections to existing mains. Fittings shall be PVC fabricated fittings with elastomeric gaskets, or ductile iron compact fittings conforming to AWWA C153 with elastomeric gaskets.

2.04 GATE VALVES

A. AWWA, Cast-Iron Gate Valves:
   1. Basis-of-Design Product: Subject to compliance with requirements, provide the product indicated on Drawings
   2. Nonrising-Stem, Metal-Seated Gate Valves:
      a. Description: Gray- or ductile-iron body and bonnet; with cast-iron or bronze double-disc gate, bronze gate rings, bronze stem, and stem nut.
         1) Standard: AWWA C500, UL 262, FM-Approved.

2) Minimum Pressure Rating: 200 psig (1380 kPa).
3) End Connections: Mechanical joint per AWWA C111.
4) Interior Coating: Complying with AWWA C550.
5) Nut: 2 inches square, complying with AWWA C500.

3. Nonrising-Stem, Resilient-Seated Gate Valves:
   a. Description: Gray- or ductile-iron body and bonnet; with bronze or gray- or ductile-iron gate, resilient seats, bronze stem, and stem nut.
      1) Standard: AWWA C509 UL 262 FM-Approved.
      2) Minimum Pressure Rating: 200 psig (1380 kPa).
      3) End Connections: Mechanical joint per ANSI A21.11 (AWWA C111).
      4) Interior Coating: Complying with AWWA C550.
      5) Nut: 2 inches square, complying with AWWA C500.

2.05 GATE VALVE ACCESSORIES AND SPECIALTIES

A. Tapping-Sleeve Assemblies:
   1. Basis-of-Design Product: Subject to compliance with requirements, provide the product indicated on Drawings.
   2. Description: Sleeve and valve compatible with drilling machine.
      a. Standard: MSS SP-60.
      b. Tapping Sleeve: Cast- or ductile-iron or stainless-steel, two-piece bolted sleeve with flanged outlet for new branch connection. Include sleeve matching size and type of pipe material being tapped and with recessed flange for branch valve.
      c. Valve: AWWA, cast-iron, nonrising-stem, metal or resilient-seated gate valve with one raised face flange mating tapping-sleeve flange.

B. Valve Boxes: Comply with AWWA M44 for cast-iron valve boxes. Include top section, adjustable extension of length required for depth of burial of valve, plug with lettering "WATER," and bottom section with base that fits over valve and with a barrel approximately 5 inches (125 mm) in diameter.
   1. Operating Wrenches: Steel, tee-handle with one pointed end, stem of length to operate deepest buried valve, and socket matching valve operating nut.
   2. Provide 24” x 24” x 6” thick concrete apron around all valve boxes in asphalt pavement areas.

2.06 CORPORATION VALVES AND CURB VALVES (STOPS)

A. Service-Saddle Assemblies: Comply with AWWA C800. Include saddle and valve compatible with tapping machine.
   1. Service Saddle: Copper alloy with seal and AWWA C800, threaded outlet for corporation valve.
   2. Corporation Valve: Bronze body and ground-key plug, with AWWA C800, threaded inlet and outlet matching service piping material.

B. Curb Valves: Comply with AWWA C800. Include bronze body, ground-key plug or ball, and wide tee head, with inlet and outlet matching service piping material.

C. Service Boxes for Curb Valves: Similar to AWWA M44 requirements for cast-iron valve boxes. Include cast-iron telescoping top section of length required for depth of burial of valve, plug with lettering "WATER," and bottom section with base that fits over curb valve and with a barrel approximately 3 inches (75 mm) in diameter.
   1. Shutoff Rods: Steel, tee-handle with one pointed end, stem of length to operate deepest buried valve, and slotted end matching curb valve.

2.07 WATER METERS

A. Manufacturers:
   1. Basis-of-Design Product: Subject to compliance with requirements, if utility company does not furnish water meter provide the product indicated on Drawings.

B. 1-1/2 Inch Compound-Type Water Meters:
   1. Description:
      a. Standard: AWWA C702.
      b. Registration: Flow in gallons (liters).

C. Fire Service Meters:
   1. Description: Use Fire Service Meter only when required by authorities having jurisdiction. Include meter modified with signal-transmitting assembly, low-voltage connecting wiring, and remote register assembly.
      a. Standard: AWWA C703.
      b. Registration: Flow in **gallons (liters)**.

2.08 BACKFLOW PREVENTERS

A. Comply with regulatory authorities having jurisdiction requirements.
   1. Maximum Pressure Loss (RPZ valve): 12 psig (83 kPa) at 2250 gpm maximum, through middle 1/3 of flow range.
   2. Maximum Pressure Loss (double detector check valve): 5 psig (83 35) at 2250 gpm maximum, through middle 1/3 of flow range.

2.09 WATER METER BOXES

A. Description: Cast-iron body and cover (H-20 rated) for disc-type water meter, with lettering "WATER METER" in cover; and with slotted, open-bottom base section of length to fit over service piping. Use only when required by the utility authority. Provide a 24” x 24” x 6” thick concrete apron in pavement areas.

2.10 FIRE HYDRANTS

A. Dry-Barrel Fire Hydrants:
   1. Basis-of-Design Product: Subject to compliance with requirements, provide the product indicated on Drawings.
   2. Description: Freestanding, with one NPS 4-1/2 (DN 115) and two NPS 2-1/2 (DN 65) outlets, 5-1/4-inch (133-mm) main valve, drain valve, and NPS 6 (DN 150) mechanical-joint inlet. Include interior coating according to AWWA C550. Hydrant shall have cast-iron body, compression-type valve opening against pressure and closing with pressure.
      a. Standard: AWWA C502 UL 246, FM-Approved.
      b. Pressure Rating: **150 psig (1035 kPa**).
      c. Outlet Threads: NFPA 1963, with external hose thread used by local fire department. Include cast-iron caps with steel chains.
      d. Operating and Cap Nuts: Pentagon, 1-1/2 inches (38 mm) point to flat.
      e. Direction of Opening: Open hydrant valve by turning operating nut to left or counterclockwise. A clearly visible arrow and the word “OPEN” shall be cast in relief on the top of the hydrant to designate direction of opening.
      f. Exterior Finish: Red alkyd-gloss enamel paint (two coats), unless otherwise indicated.

2.11 RESTRAINED JOINT SYSTEMS FOR FIRE LINE LEAD IN

A. The following section shall only apply to the portion of fire protection main extending from the 90 degree elbow below the sprinkler riser room floor to the flanged end of the pipe extending 1’-0” above the sprinkler riser room finished floor and the horizontal portion of pipe extending from the 90 degree elbow towards the building foundation.

B. The fire protection main entering the sprinkler riser room through the floor shall be restrained from movement by the following:

   1. Pipe Clamps
      a. Clamp dimensions shall be 5/8” x 2½” for 10” pipe, 5/8” x 3” for 12” and larger pipe;
      b. Clamp bolt dimensions shall be ¾” for 10” pipe, 7/8” for 12” and larger pipe;
      c. The diameter of the bolt hole shall be 1/16” larger than that of the corresponding bolt.
   2. Tie Rods: Threaded sections of rods shall not be formed or bent. Rods shall not be less than 5/8” in diameter and the minimum number of rods for each clamp shall be:
      a. 10” Pipe: (4)-5/8” or (3)-3/4” or (2)-7/8” rods;
      b. 12” Pipe: (6)-5/8” or (4)-3/4” or (3)-7/8” rods; and
      c. 14” Pipe: (8)-5/8” or (5)-3/4” or (4)-7/8” rods
      d. 16” Pipe: (10)-5/8” or (7)-3/4” or (5)-7/8” rods

3. Washers
   a. Cast-iron washer dimensions shall be 5/8” x 3” for 10” pipe, ½” x 3½” for 12” pipe and larger;
   b. Steel washer dimensions shall be ½” x 3” for 10” pipe, ½” x 3½” for 12” pipe and larger; and
   c. The diameter of the hole in the washer shall be 1/8” larger than the rod.
4. Polyethylene Encasement: To prevent corrosion, a polyethylene tube/sheet shall be applied to the exterior piping, fittings, clamp and rods. The polyethylene casing shall be applied per the manufacturer’s listing and shall extend 6” above finished floor elevation in the sprinkler room.

PART 3 - EXECUTION

3.01 EARTHWORK
A. Refer to Division 31 Section 312000 “Earth Moving” for excavating, trenching, and backfilling.

3.02 PIPING APPLICATIONS
A. General: Use pipe, fittings, and joining methods for piping systems according to the following applications.
B. Transition couplings and special fittings with pressure ratings at least equal to piping pressure rating may be used, unless otherwise indicated.
C. Do not use flanges or unions for underground piping.
D. Flanges, unions, grooved-end-pipe couplings, and special fittings may be used, instead of joints indicated, on aboveground piping and piping in vaults.
E. Underground water-service piping shall be as shown on the plans

3.03 VALVE APPLICATIONS
A. General Application: Use mechanical-joint-end valves for NPS 2 (DN 50) and larger underground installation. Use threaded- or flanged-end valves for installation in vaults. Use UL/FMG, nonrising-stem gate valves for installation with indicator posts. Use corporation valves and curb valves with ends compatible with piping, for NPS 2 (DN 50) and smaller installation.
B. Drawings indicate valve types to be used.
C. Provide 24” x 24” x 6” thick concrete apron around all valve boxes in asphalt pavement areas.

3.04 PIPING SYSTEMS - COMMON REQUIREMENTS
A. See Division 22 Section "Common Work Results for Plumbing" for piping-system common requirements.

3.05 PIPING INSTALLATION
A. Water-Main Connection: Verify with regulatory authority having jurisdiction that size of tap and location shown on the drawings are acceptable. Tap water main according to requirements of water utility company and of size and in location indicated.
B. Make connections NPS 2 (DN 50) and smaller with drilling machine according to the following:
   1. Install service-saddle assemblies and corporation valves in size, quantity, and arrangement required by utility company standards.
   2. Install service-saddle assemblies on water-service pipe to be tapped. Position outlets for corporation valves.
   3. Use drilling machine compatible with service-saddle assemblies and corporation valves. Drill hole in main. Remove drilling machine and connect water-service piping.
   4. Install corporation valves into service-saddle assemblies.
   5. Install manifold for multiple taps in water main.
   6. Install curb valve in water-service piping with head pointing up and with service box.
C. Comply with NFPA 24 for fire-service-main piping materials and installation.
D. Install ductile-iron, water-service piping according to AWWA C600 and AWWA M41.
E. Install PVC, AWWA pipe according to ASTM F 645 and AWWA M23.

F. Bury piping with depth of cover over top at least [42 inches (1061 mm), with top at least 12 inches (300 mm) below level of maximum frost penetration, or as required by regulatory authority having jurisdiction, whichever is deeper. If pipe is installed in an excavated “cut” section prior to completion of grading operations, pipe shall be installed so that minimum required cover will exist upon completion of grading operations.

G. Install piping by tunneling or jacking, or combination of both, under streets and other obstructions that cannot be disturbed.

H. Extend water-service piping and connect to water-supply source and building-water-piping systems five (5) feet outside face of building wall in locations and pipe sizes indicated.
   1. Terminate water-service piping five (5) feet outside building wall until building-water-piping systems are installed. Terminate piping with caps, plugs, or flanges as required for piping material. Make connections to building-water-piping systems when those systems are installed.

I. Install underground piping with restrained joints at horizontal and vertical changes in direction. Use restrained-joint piping, thrust blocks, anchors, tie-rods and clamps, and other supports.

J. Pipe Bedding: Pipe bedding material shall be as specified on trenching and bedding details as shown on drawings. No pipe shall be laid resting on a rock, blocking or unyielding objects.

K. Location with Sewers: Separate trenches shall be provided for water lines and sewer lines, with lines separated by a minimum of 10 feet horizontally. Water mains that cross sewers shall have a minimum vertical separation of 18 inches.

L. All piping shall be installed and verified to be level. This shall apply to piping in the horizontal and vertical positions.

M. See Division 21 Section "Water-Based Fire-Suppression Systems" for fire-suppression-water piping inside the building.

N. See Division 22 Section "Domestic Water Piping" for potable-water piping inside the building.

3.06 JOINT CONSTRUCTION

A. See Engineering Drawings for basic piping joint construction.

B. Make pipe joints according to the following:
   1. Copper-Tubing, Pressure-Sealed Joints: Use proprietary crimping tool and procedure recommended by copper, pressure-seal-fitting manufacturer.
   2. Ductile-Iron Piping, Gasketed Joints for Water-Service Piping: AWWA C600 and AWWA M41.
   3. Ductile-Iron Piping, Gasketed Joints for Fire-Service-Main Piping: UL 194.
   4. PVC Piping Gasketed Joints: Use joining materials according to AWWA C900. Construct joints with elastomeric seals and lubricant according to ASTM D 2774 or ASTM D 3139 and pipe manufacturer's written instructions.
   5. Dissimilar Materials Piping Joints: Use adapters compatible with both piping materials, with OD, and with system working pressure. Refer to Division 22 Section "Common Work Results for Plumbing" for joining piping of dissimilar metals.

3.07 ANCHORAGE INSTALLATION

A. Install anchorages for tees, plugs and caps, bends, crosses, valves, and hydrant branches. Include anchorages for the following piping systems:
   1. Gasketed-Joint, Ductile-Iron, Water-Service Piping: According to AWWA C600.
   2. Gasketed-Joint, PVC Water-Service Piping: According to AWWA M23.
   3. Fire-Service-Main Piping: According to NFPA 24.

B. Apply full coat of asphalt or other acceptable corrosion-resistant material to surfaces of installed ferrous anchorage devices.

3.08 VALVE INSTALLATION

A. AWWA Gate Valves: Comply with AWWA C600 and AWWA M44. Install each underground valve with stem pointing up and with valve box.

B. AWWA Valves Other Than Gate Valves: Comply with AWWA C600 and AWWA M44.

C. UL/FMG, Gate Valves: Comply with NFPA 24. Install each underground valve and valves in vaults with stem pointing up and with vertical cast-iron indicator post.
D. UL/FMG, Valves Other Than Gate Valves: Comply with NFPA 24.
E. MSS Valves: Install as component of connected piping system.
F. Corporation Valves and Curb Valves: Install each underground curb valve with head pointed up and with service box.

3.09 WATER METER INSTALLATION

A. Install water meters, piping, and specialties according to utility company's written instructions.

3.10 ROUGHING-IN FOR WATER METERS

A. Rough-in piping and specialties for water meter installation according to utility company's written instructions.

3.11 BACKFLOW PREVENTER INSTALLATION

A. Install backflow preventers of type, size, and capacity indicated. Include valves and test cocks. Install according to requirements of plumbing and health department and authorities having jurisdiction.
B. Do not install backflow preventers that have relief drain in vault or in other spaces subject to flooding.
C. Do not install bypass piping around backflow preventers.

3.12 WATER METER BOX INSTALLATION

A. Install water meter boxes in paved areas flush with surface. Provide 24” x 24” x 6” thick concrete apron around all valve boxes in asphalt pavement areas.
B. Install water meter boxes in grass or earth areas with top 2 inches (50 mm) above surface.

3.13 FIRE HYDRANT INSTALLATION

A. General: Install each fire hydrant with separate gate valve in supply pipe, anchor with restrained joints or thrust blocks, and support in upright position.
B. AWWA Fire Hydrants: Comply with AWWA M17.
C. UL/FMG Fire Hydrants: Comply with NFPA 24.

3.14 CONNECTIONS

A. Piping installation requirements are specified in other Division 22 Sections. Drawings indicate general arrangement of piping, fittings, and specialties.
B. See Engineering Plans for piping connections to valves and equipment.

3.15 FIELD QUALITY CONTROL

A. Piping Tests: Conduct piping tests before joints are covered and after concrete thrust blocks have hardened sufficiently. Fill pipeline 24 hours before testing and apply test pressure to stabilize system. Use only potable water.
B. Hydrostatic Tests: Test at not less than one-and-one-half times working pressure for two hours.
    1. The Contractor shall test all pipe lines and appurtenances with water at test pressure of 200 psi or 50 psi in excess of the system working pressure, whichever is greater. Test pressure must be maintained for at least 2 hours. All leakage apparent after testing must be repaired immediately. The work will not be finally accepted until leakage shall be as follows:
        a. The amount of leakage at the joints shall not exceed 2 quarts per hour per 100 gaskets or joints, irrespective of pipe diameter.
        b. The amount of leakage specified above shall be permitted to be increased by 1 fluid ounce per inch valve diameter per hour for each metal seated valve isolating the test section.
        c. If dry barrel hydrants are tested with the main valve open so the hydrants are under pressure, an additional 5 fluid ounces per minute shall be permitted for each hydrant.
        d. The amount of leakage in buried piping shall be measured at the specified test pressure by pumping from a calibrated container.

2. Fire Water System tests shall be in full conformity with the requirements of all applicable codes, NFPA standards, and other authorities having jurisdiction.
    a. All new underground mains and lead-ins shall be flushed thoroughly before connection is made to internal system piping. The site utility subcontractor shall be responsible for disposal of the test water drained from the test outlets.
    b. The trench shall be backfilled between joints before testing to prevent movement of pipe.
    c. Test shall be made by the site utility subcontractor in the presence of the regulatory authority having jurisdiction and/or the Owner's representative.
    d. After the fire service underground main and lead-in have been installed by the site utility subcontractor and are ready for use, the site utility subcontractor shall furnish 2 completed copies of the "Contractor's Material and Test Certificate for Private Fire Service Mains" form to the General Contractor. Prior to attachment of any pipe or equipment to the lead-in located in the sprinkler room, the sprinkler subcontractor shall obtain a copy of the completed form from the General Contractor.
    e. The site utility subcontractor shall prepare reports of testing activities and submit 2 copies to the General Contractor.

C. Prepare reports of testing activities.

3.16 IDENTIFICATION

3.17 Install continuous underground detectable warning tape during backfilling of trench for underground water-distribution piping. Locate below finished grade, directly over piping. Underground warning tapes are specified in Division 31 Section 312000 "Earth Moving" .

3.18 CLEANING

A. Clean and disinfect water-distribution piping as follows:
1. Purge new water-distribution piping systems and parts of existing systems that have been altered, extended, or repaired before use.
2. Use purging and disinfecting procedure prescribed by authorities having jurisdiction or, if method is not prescribed by authorities having jurisdiction, use procedure described in NFPA 24 for flushing of piping. Flush piping system with clean, potable water until dirty water does not appear at points of outlet.
3. Use purging and disinfecting procedure prescribed by authorities having jurisdiction or, if method is not prescribed by authorities having jurisdiction, use procedure described in AWWA C651 or do as follows:
    a. Fill system or part of system with water/chlorine solution containing at least 50 ppm of chlorine; isolate and allow tostand for 24 hours.
    b. Drain system or part of system of previous solution and refill with water/chlorine solution containing at least 200 ppm of chlorine; isolate and allow to stand for 3 hours.
    c. After standing time, flush system with clean, potable water until no chlorine remains in water coming from system.
    d. Submit water samples in sterile bottles to authorities having jurisdiction. Repeat procedure if biological examination shows evidence of contamination.

B. The site utility subcontractor shall prepare reports of purging and disinfecting activities and submit two (2) copies to the General Contractor.

C. All fire protection underground mains shall be flushed per the flow rates listed below:

Fire Pump and/or Water Storage Tank Installed		No Fire Pump or Water Storage Tank	
8" pipe	2,350 gpm	8" pipe	1,560 gpm
10" pipe	3,670 gpm	10" pipe	2,440 gpm
12" pipe	5,290 gpm	12" pipe	3,520 gpm
14" pipe	7,188 gpm		
16" pipe	9,388 gpm		

Underground and lead-in fire protection mains shall be flushed through fire hydrants at dead ends of the underground piping system or through aboveground flushing outlets which are accessible will allow water to drain to a safe location and will provide the required flow listed above. Flush

underground mains until water is clear. Continue to flush for five minutes after water is clear. Utilize approved water flow measuring devices to verify that the required water flow is achieved.

END OF SECTION 331000

CONFORMANCE SUBMITTAL

SECTION 331000 – Facility Water Distribution Piping

Project Location _____

(*City, State*)

General Contractor: _____

(*Company Name, Phone Number*)

_____

(*Address*)

Sub-Contractor: _____

(*Company Name, Phone Number*)

_____

(*Address*)

The following products have been selected (check one box) for use in this project from the list of acceptable products specified:

Domestic and Fire Mains:

☐ Ductile-Iron Pipe, AWWA C151 Class 350, MJ DI Compact Fittings

☐ Polyvinyl Chloride (PVC) Pipe, AWWA C900, Class _____, MJ DI Compact Fittings

☐ Other per AHJ: _____

Domestic and Irrigation Supply Lines:

☐ Copper Tubing, ASTM B88, Type K, Annealed Temper, Copper Fittings

☐ Polyvinyl Chloride (PVC) Pipe, ASTM D2241, SDR 21

☐ Other per AHJ: _____

Fire Hydrants, BFP's, Valves, Meters, Fittings, Vaults, and all other Appurtenances:

☐ Conform to Project Specifications and All Authorities Having Jurisdiction

---

I represent to the City/Owner/Engineer that the product selected will be installed in compliance with the applicable codes for the authorities having jurisdiction and in accordance with the contract documents. If noncompliance is discovered the General Contractor shall make or cause to be made all necessary corrections to meet the applicable codes and specifications. Immediately or as directed by Owner the work shall be completed without additional cost to the Owner and / or the contract.

Sub-Contractor: _____

(*Signature of the Authorized Agent of the Sub-Contractor*) Date

_____

(*Print Name of the Authorized Agent of the Sub-Contractor*)

General Contractor: _____

(*Signature of the Authorized Agent of the General Contractor*) Date

_____

(Print Name of the Authorized Agent of the General Contractor)

WATER DISTRIBUTION SYSTEM CERTIFICATION FORM

Project	
Date	
Engineer	
General Contractor	
Utility Contractor	
Const. Mgr.	

ENGINEER CERTIFICATION (If required)

I certify that the water distribution system for the above referenced project has been installed and tested in accordance with local code and Project Plans and Specifications dated _____**.**

Engineer _____

Registration No._____ Affix Seal Here (not valid unless sealed)

Date _____

GENERAL CONTRACTOR CERTIFICATION (Required)

I certify that the water distribution system for the above referenced project has been installed and tested in accordance with local code and Project Plans and Specifications dated _____**.**

General Contractor _____

License No._____

Date _____

UTILITY CONTRACTOR CERTIFICATION (Required)

I certify that the water distribution system for the above referenced project has been installed and tested in accordance with local code and Project Plans and Specifications dated _____**.**

Utility Contractor _____

License No._____

Date _____

* Submit this certification form with test results, local certificates, etc.

Contractor's Material and Test Certificate for Underground Piping

PROCEDURE

Upon completion of work, inspection and tests shall be made by the contractor's representative and witnessed by an owner's representative. All defects shall be corrected and system left in service before contractor's personnel finally leave the job.

A certificate shall be filled out and signed by both representatives. Copies shall be prepared for approving authorities, owners, and contractor. It is understood the owner's representative's signature in no way prejudices any claim against contractor for faulty material, poor workmanship, or failure to comply with approving authority's requirements or local ordinances.

Property name		Date
Property address		
Plans	Accepted by approving authorities (names)	
	Address	
	Installation conforms to accepted plans	☐ Yes ☐ No
	Equipment used is approved If no, state deviations	☐ Yes ☐ No
Instructions	Has person in charge of fire equipment been instructed as to location of control valves and care and maintenance of this new equipment? If no, explain	☐ Yes ☐ No
	Have copies of appropriate instructions and care and maintenance charts been left on premises? If no, explain	☐ Yes ☐ No
Location	Supplies buildings	
Underground pipes and joints	Pipe types and class	Type joint
	Pipe conforms to _____ standard Fittings conforms to _____ standard If no, explain	☐ Yes ☐ No ☐ Yes ☐ No
	Joints needed anchorage clamped, strapped, or blocked in accordance with _____ standard If no, explain	☐ Yes ☐ No
Test description	Flushing: Flow the required rate until water is clear as indicated by no collection of foreign material in burlap bags at outlets such as hydrants and blow-offs. Flush at flows not less than 390 gpm (1476 L/min) for 4-in. pipe, 880 gpm (3331 L/min) for 6-in. pipe, 1560 gpm (5905 L/min) for 8-in. pipe, 2440 gpm (9235 L/min) for 10-in. pipe, and 3520 gpm (13,323 L/min) for 12-in. pipe. When supply cannot produce stipulated flow rates, obtain maximum available. Hydrostatic: Hydrostatic tests shall be made at not less than 200 psi (13.8 bar) for 2 hours or 50 psi (3.4 bar) above static pressure in excess of 150 psi (10.3 bar) for 2 hours. Leakage: New pipe laid with rubber gasketed joints shall, if the workmanship is satisfactory, have little or no leakage at the joints. The amount of leakage at the joints shall not exceed 2 quarts per hour (1.89 L/hr) per 100 joints irrespective of pipe diameter. The leakage shall be distributed over all joints. If such leakage occurs at a few joints, the installation shall be considered unsatisfactory and necessary repairs made. The amount of allowable leakage specified above can be increased by 1 fluid ounce per inch valve diameter per hr. (30 mL/25 mm/hr) for each metal seated valve isolating the test section. If dry barrel hydrants are tested with the main valve open so the hydrants are under pressure, an additional 5 ounces per minute (150 mL/min) leakage is permitted for each hydrant.	
Flushing tests	New underground piping flushed according to _____ standard by (company) If no, explain	☐ Yes ☐ No
	How flushing flow was obtained ☐ Public water ☐ Tank or reservoir ☐ Fire pump	Through what type opening ☐ Hydrant butt ☐ Open pipe
	Lead-ins flushed according to _____ standard by (company) If no, explain	☐ Yes ☐ No
	How flushing flow was obtained ☐ Public water ☐ Tank or reservoir ☐ Fire pump	Through what type opening ☐ Y connection to flange and spigot ☐ Open pipe

Hydrostatic test	All new underground piping hydrostatically tested at _____ psi for _____ hours	Joints covered ☐ Yes ☐ No
Leakage test	Total amount of leakage measured _____ gallons _____ hours	
	Allowable leakage _____ gallons _____ hours	
Hydrants	Number installed / Type and make	All operate satisfactorily ☐ Yes ☐ No
Control valves	Water control valves left wide open If no, state reason	☐ Yes ☐ No
	Hose threads of fire department connections and hydrants interchangeable with those of fire department answering alarm	☐ Yes ☐ No
Remarks	Date left in service	
Signatures	Name of installing contractor	
	Tests witnessed by	
	For property owner (signed) / Title / Date	
	For installing contractor (signed) / Title / Date	
Additional explanation and notes		

SECTION 333000

SANITARY SEWER

PART 1 - GENERAL

1.01 RELATED DOCUMENTS

A. Drawings and general provisions of the Contract, including General and Supplementary Conditions and all Specification Sections, apply to this Section.

1.02 SUMMARY

A. Section Includes:

1. This section includes sanitary sewer piping and related appurtenances from connection to main to within 5 feet of outside building limits.
2. Pipe and fittings.
3. Non-pressure and pressure couplings.
4. Expansion joints and deflection fittings.
5. Backwater valves.
6. Cleanouts.
7. Encasement for piping.
8. Manholes.

1.03 REFERENCE STANDARDS

A. American Society for Testing and Materials (ASTM)
   1. A746 - Standard Specification for Ductile Iron Gravity Sewer Pipe
   2. D3034 – Standard Specification for Type PSM Poly Vinyl Chloride (PVC) Sewer Pipe and Fittings
   3. F477 - Standard Specification for Elastomeric Seals (Gaskets) for Joining Plastic Pipe
   4. F696 - Standard Specification for Poly Vinyl Chloride (PVC) Large-Diameter Plastic Gravity Sewer Pipe and Fittings
   5. C476 - Standard Specification for Grout for Masonry
   6. C443 - Standard Specification for Joints for Circular Concrete Sewer and Culvert Pipe, Using Rubber Gaskets
   7. C923 - Standard Specification for Resilient Connectors Between Reinforced Concrete Manhole Structures, Pipes and Laterals
   8. D2321 - Standard Practice for Underground Installation of Thermoplastic Pipe for Sewers and Other Gravity-Flow Applications
   9. D478 - Standard Specifications for Precast Reinforced Concrete Manhole Sections
   10. C969 - Standard Practice for Infiltration and Exfiltration Acceptance Testing of Installed Precast Concrete Sewer Lines
B. American Society of Sanitary Engineers (ASSE)
C. American National Standards Institute (ANSI)
D. American Concrete Institute (ACI)
   1. 318 - Code Requirements for Structural Plain Concrete
E. National Sanitation Foundation (NSF)
F. American Water Works Association (AWWA)
   1. C110 - Ductile-Iron and Gray-Iron Fittings, 3 in through 48 in (75 mm through 1200 mm), for Water and Other Liquids (revision of ANSI/AWWA C110/A21.10-93)
   2. C1111 - Rubber-Gasket Joints for Ductile-Iron Pressure Pipe and Fittings C153 - Ductile-Iron Compact Fittings, 3 in. through 24 in. (76 mm Through 610 mm) and 54 in. through 64 in. (1,400 mm Through 1,600 mm), for Water Service (revision of ANSI/AWWA C153/A21.53-94).
   3. C600 - Installation of Ductile-Iron Water Mains and Their Appurtenances (revision of ANSI/AWWA C600-93)
   4. C150 - ANSI Standard for Thickness Design of Ductile Iron Pipe
   5. C151 – ANSI Standard for Ductile Iron Pipe

6. C153 – ANSI Standard for Ductile Iron Pipe Compact Fittings

G. Federal Specifications
   1. SS-S-00210 - Sealing Compound Preformed Plastic for Pipe Joints

H. Uni-Bell PVC Pipe Association
   1. UNI-B-6 - Low-Pressure Air Testing of Installed Sewer Pipe

1.04 SUBMITTALS

A. Conformance Submittal: The General Contractor and the Subcontractor shall execute the Conformance Submittal(s) at the end of this Section.

B. Field inspection, testing and quality-control reports.

C. Sanitary Sewer Certification Form (signed by the Engineer, General Contractor and Utility Contractor) at the end of this Section.

1.05 DELIVERY, STORAGE, AND HANDLING

A. Do not store pipe, and fittings in direct sunlight.

B. Protect pipe, pipe fittings, and seals from dirt and damage.

C. Handle manholes according to manufacturer's written rigging instructions.

1.06 PROJECT CONDITIONS

A. Coordination and Fees:
   1. Contractor shall comply with requirements of the regulatory authorities having jurisdiction including tapping of sewer mains, installation and testing.
   2. Contractor shall be responsible for obtaining and payment of all tap and construction permit fees associated with this Section.
   3. Contractor to install all sanitary sewer lines and appurtenances as shown on the drawings to within 5 feet of building limits. If the Contractor’s work terminates at a connection point where work by others is complete, the Contractor shall make the connection. If future connections are required by others, the Contractor shall install plugging and marking as necessary to identify and locate the work.

B. Interruption of Existing Sanitary Sewerage Service: Do not interrupt service to facilities occupied by Owner or others unless permitted under the following conditions and then only after arranging to provide temporary service according to requirements indicated:
   1. Notify Owner no fewer than two days in advance of proposed interruption of service.
   2. Do not proceed with interruption of service without Owner’s written permission.

PART 2 - PRODUCTS

2.01 DUCTILE-IRON, GRAVITY SEWER PIPE AND FITTINGS

A. Pipe: ASTM A 746, for push-on joints.

B. Standard Fittings: AWWA C110, ductile or gray iron, for push-on joints.

C. Compact Fittings: AWWA C153, ductile iron, for push-on joints.

D. Gaskets: AWWA C111, rubber.

2.02 PVC PIPE AND FITTINGS

A. Performance Requirements:

   1. Gravity Flow Non-Pressure Piping Pressure Ratings: at least equal to system test pressure.
   2. Force-Main Pressure Ratings: at least equal to system operating pressure but not less than 150 psig.

B. PVC Gravity Sewer Piping:
   1. 12 Inch and Smaller PVC Pipe and Fittings: ASTM D 3034, SDR, PVC gravity sewer pipe with bell-and-spigot ends and with integral ASTM F 477, elastomeric seals for gasketed joints.
   2. 15 Inch and Larger PVC Pipe and Fittings: ASTM F 679, SDR 35, Type T-1 wall thickness, PVC gravity sewer pipe with bell-and-spigot ends and with integral ASTM F 477, elastomeric seals for gasketed joints.

2.03 NONPRESSURE-TYPE TRANSITION COUPLINGS

A. Comply with ASTM C 1173, elastomeric, sleeve-type, reducing or transition coupling, for joining underground nonpressure piping. Include ends of same sizes as piping to be joined and corrosion-resistant-metal tension band and tightening mechanism on each end.

B. Sleeve Materials:
   1. For Plastic Pipes: ASTM F 477, elastomeric seal or ASTM D 5926, PVC.
   2. For Dissimilar Pipes: ASTM D 5926, PVC or other material compatible with pipe materials being joined.

C. Unshielded, Flexible Couplings:

2.04 CLEANOUTS

A. Cleanouts shall be provided on sanitary sewer service laterals at no more than 100' on center. Exterior cleanout plug shall be level with adjacent grade and provided with a 2' x 2' x 6" thick concrete apron as shown on the Drawings.

B. Cast-Iron Cleanouts:
   1. Basis-of-Design Product: Subject to compliance with requirements, provide US Foundry cover USF 7621 or equal product as indicated on Drawings.
   2. Description: ASME A112.36.2M, round, gray-iron housing with clamping device and round, secured, scoriated, gray-iron cover. Include gray-iron ferrule with inside calk or spigot connection and countersunk, tapered-thread, brass closure plug.
   3. Top-Loading Classification(s): Heavy Duty.
   4. Sewer Pipe Fitting and Riser to Cleanout: ASTM A 74, Service class, cast-iron soil pipe and fittings.

C. PVC Cleanouts:
   1. Basis-of-Design Product: Subject to compliance with requirements, provide product indicated on Drawings.
   2. Description: PVC body with PVC threaded plug. Include PVC sewer pipe fitting and riser to cleanout of same material as sewer piping.

2.05 ENCASEMENT FOR PIPING

A. Standard: ASTM A 674 or AWWA C105.

B. Material: high-density, cross-laminated polyethylene film of 0.004-inch (0.10-mm) minimum thickness.

C. Form: Sheet.

D. Color: Black.

2.06 MANHOLES

A. Standard Precast Concrete Manholes:
   1. Description: ASTM C 478 (ASTM C 478M), precast, reinforced concrete, of depth indicated, with provision for rubber gasketed joints and rubber pipe boots.
   2. Inside Diameter: 48 inches (1200 mm) minimum unless otherwise indicated.
   3. Ballast: Increase thickness of precast concrete sections or add concrete to base section, as required to prevent flotation.
   4. Base Section: 8-inch (175-mm) minimum thickness for floor slab and 5-inch (125-mm) minimum thickness for walls and base riser section; with separate base slab or base section with integral floor.
   5. Riser Sections: 5-inch (125-mm) minimum thickness, of length to provide depth indicated.
   6. Top Section: Eccentric-cone type unless concentric-cone or flat-slab-top type is indicated; with top of cone of size that matches grade rings.
   7. Gasket: ASTM C 443, rubber (when required by local authority having jurisdiction).
   8. Resilient Pipe Connectors: ASTM C 923 (ASTM C 923M), cast or fitted into manhole walls, for each pipe connection.
   9. Steps: Individual FRP steps wide enough to allow worker to place both feet on one step and designed to prevent lateral slippage off step. Cast or anchor steps into sidewalls at 16-inch (400-mm) intervals. Omit steps if total depth from floor of manhole to finished grade is less than 42 inches (1050 mm).

10. Grade Rings (if required): Reinforced-concrete rings, 6- to 9-inch (150- to 225-mm) total thickness, with diameter matching manhole frame and cover, and with height as required to adjust manhole frame and cover to indicated elevation and slope.
11. Pipe Connectors: ASTM C 923, resilient, of size required for each pipe connecting to base section.
12. Joints of the manhole sections shall be tongue and groove filled with approved preformed butyl rubber base sealing compound conforming to Federal Specifications SS-S210A, Type 1, and Rope Form.

B. Designed Precast Concrete Manholes:
1. Description: ASTM C 913; designed according to ASTM C 890 for A-16 (ASSHTO HS20-44), heavy-traffic, structural loading; of depth, shape, and dimensions indicated, with provision for sealant joints.
2. Ballast: Increase thickness of one or more precast concrete sections or add concrete to manhole as required preventing flotation.
3. Joint Sealant: ASTM C 990 (ASTM 990M), bitumen or butyl rubber.
4. Resilient Pipe Connectors: ASTM C 923 (ASTM C 923M), cast or fitted into manhole walls, for each pipe connection.
5. Steps: Individual FRP steps or wide enough to allow worker to place both feet on one step and designed to prevent lateral slippage off step. Cast or anchor steps into sidewalls at 16-inch (400-mm) intervals. Omit steps if total depth from floor of manhole to finished grade is less than **42 inches (1050 mm)**.
6. Grade Rings: Reinforced-concrete rings, 6- to 9-inch (150- to 225-mm) total thickness, with diameter matching manhole frame and cover, and with height as required to adjust manhole frame and cover to indicated elevation and slope.

C. Manhole Frames and Covers:
1. Description: Ferrous; 24-inch (610-mm) ID by 7- to 9-inch (175- to 225-mm) riser, with 4-inch- (100-mm-) minimum-width flange and 26-inch- (660-mm-) diameter cover. Include indented top design with 2 inch high lettering cast into cover, with the words "SANITARY SEWER." Cover must be bolted (to prevent theft).
2. Standard manhole frame and cover shall conform to the standard detail of the regulatory authorities having jurisdiction for the project. Otherwise manhole frames and covers shall be as detailed on the Drawings.

2.07 CONCRETE

A. General: Cast-in-place concrete complying with ACI 318, ACI 350/350R (ACI 350M/350RM), and the following:
1. Cement: ASTM C 150, Type II.
2. Fine Aggregate: ASTM C 33, sand.
3. Coarse Aggregate: ASTM C 33, crushed gravel.
4. Water: Potable.

B. PortlandCement Design Mix: 4000 psi (27.6 MPa) minimum, with 0.45 maximum water/cementitious materials ratio.
1. Reinforcing Fabric: ASTM A 185/A 185M, steel, welded wire fabric, plain.
2. Reinforcing Bars: ASTM A 615/A 615M, Grade 60 (420 MPa) deformed steel.

C. Manhole Channels and Benches: Factory or field formed from concrete. Portland cement design mix, 4000 psi (27.6 MPa) minimum, with 0.45 maximum water/cementitious materials ratio. Include channels and benches in manholes.
1. Channels: Concrete invert, formed to same width as connected piping, with height of vertical sides to three-fourths of pipe diameter. Form curved channels with smooth, uniform radius and slope.
    a. Invert Slope: 2 percent through manhole.
2. Benches: Concrete, sloped to drain into channel.
    a. Slope: 4 percent.

D. Ballast and Pipe Supports: Portland cement design mix, 3000 psi (20.7 MPa) minimum, with 0.58 maximum water/cementitious materials ratio.
1. Reinforcing Fabric: ASTM A 185/A 185M, steel, welded wire fabric, plain.
2. Reinforcing Bars: ASTM A 615/A 615M, Grade 60 (420 MPa) deformed steel.

PART 3 - EXECUTION

3.01 EARTHWORK

A. Excavating, trenching, and backfilling are specified in Division 31 Section "Earth Moving"

3.02 PIPING INSTALLATION

A. General Locations and Arrangements: Drawing plans and details indicate general location and arrangement of underground sanitary sewer piping. Location and arrangement of piping layout take into account design considerations. Install piping as indicated, to extent practical. Where specific installation is not indicated, follow piping manufacturer's written instructions.

B. Install piping beginning at low point, true to grades and alignment indicated with unbroken continuity of invert. Place bell ends of piping facing upstream. Install gaskets, seals, sleeves, and couplings according to manufacturer's written instructions for using lubricants, cements, and other installation requirements.

C. Clear interior of piping and structures of dirt and deleterious materials as work progresses. Place plug in end of incomplete piping at end of day and work stops for greater than 24 hours. Flush piping between manholes and other structures to remove collected debris when needed.

D. Install manholes for changes in direction unless fittings are indicated. Use fittings for branch connections unless direct tap into existing sewer is indicated.

E. Install proper size increasers, reducers, and couplings where different sizes or materials of pipes and fittings are connected. Reducing size of piping in direction of flow is prohibited.

F. Install gravity-flow piping to within 5 feet of the building limits of sizes and in locations shown on the Drawings. Terminate piping as specified.

G. When installing pipe under streets or other obstructions that cannot be disturbed, use pipe-jacking process of micro tunneling.

H. Install gravity-flow, nonpressure, drainage piping according to the following:

1. Install piping pitched down in direction of flow, at slope shown on the Drawings, and at a minimum slope of 1 percent for 6 inch diameter pipe and 0.5 percent for 8 diameter inch pipes unless otherwise indicated.
2. Install piping with 36-inch (915-mm) minimum cover.
3. Install ductile-iron, gravity sewer piping according to ASTM A 746.
4. Install PVC gravity sewer piping according to ASTM D 2321 and ASTM F 1668.

I. Install force-main, pressure piping according to the following:

1. Install piping with restrained joints at tee fittings and at horizontal and vertical changes in direction. Use corrosion-resistant rods, pipe or fitting manufacturer's proprietary restraint system, or cast-in-place-concrete supports or anchors.
2. Install piping with 36-inch (915-mm) minimum cover.
3. Install ductile-iron special fittings according to AWWA C600.
4. Install PVC pressure piping according to AWWA M23 or to ASTM D 2774 and ASTM F 1668.

J. If indicated on Drawings install corrosion-protection piping encasement over the following underground metal piping according to ASTM A 674 or AWWA C105:

1. Ductile-iron pipe and fittings.
2. Expansion joints and deflection fittings.

K. Clear interior of piping and manholes of dirt and superfluous material as work progresses. Maintain swab or drag in piping, and pull past each joint as it is completed. Place plug in end of incomplete piping at end of day and when work stops.

3.03 PIPE JOINT CONSTRUCTION

A. Join gravity-flow, nonpressure, drainage piping according to the following:

1. Join ductile-iron, gravity sewer piping according to AWWA C600 for push-on joints.
2. Join PVC gravity sewer piping according to ASTM D 2321 and ASTM D 3034 for elastomeric-seal joints or ASTM D 3034 for elastomeric-gasket joints.
3. Join dissimilar pipe materials with nonpressure-type, flexible or rigid couplings.

B. Join force-main, pressure piping according to the following:

1. Join PVC pressure piping according to AWWA M23 for gasketed joints.

C. Pipe couplings, expansion joints, and deflection fittings with pressure ratings at least equal to piping rating may be used in applications below unless otherwise indicated.
1. Use non-pressure flexible couplings where required to join gravity-flow, nonpressure sewer piping unless otherwise indicated.
   a. Shielded flexible couplings for pipes of same or slightly different OD.
   b. Unshielded, increaser/reducer-pattern, flexible couplings for pipes with different OD.
   c. Ring-type flexible couplings for piping of different sizes where annular space between smaller piping's OD and larger piping's ID permits installation.
2. Use pressure pipe couplings for force-main joints.

3.04 MANHOLE INSTALLATION

A. General: Install manholes complete with appurtenances and accessories indicated.
B. Install precast concrete manhole sections with sealants according to ASTM C 891.
C. Install FRP manholes according to manufacturer's written instructions.
D. Form continuous concrete channels and benches between inlets and outlet.
E. Set tops of frames and covers flush with finished surface of manholes that occur in pavements. Set tops 3 inches (76 mm) above finished surface elsewhere unless otherwise indicated.

3.05 CONCRETE PLACEMENT

A. Place cast-in-place concrete according to ACI 318.

3.06 BACKWATER VALVE INSTALLATION (If used)

A. Install horizontal-type backwater valves in piping manholes or pits.
B. Install combination horizontal and manual gate valves in piping and in manholes.
C. Install terminal-type backwater valves on end of piping and in manholes. Secure units to sidewalls.

3.07 CLEANOUT INSTALLATION

A. Install cleanouts and riser extensions from sewer pipes to cleanouts at grade. Use cast-iron soil pipe fittings in sewer pipes at branches for cleanouts, and use cast-iron soil pipe for riser extensions to cleanouts. Install piping so cleanouts open in direction of flow in sewer pipe.

1. Use Heavy-Duty, top-loading classification cleanouts in vehicle-traffic and truck service areas.

B. Set cleanout frames and covers in cast-in-place-concrete, 24 by 24 by 6 inches (600 by 600 by 150 mm) deep. Set with tops flush with surrounding grade.
C. Set cleanout frames and covers in concrete pavement and roads with tops flush with pavement surface.

3.08 CONNECTIONS

A. Connect nonpressure, gravity-flow drainage piping to building's sanitary building drains specified in the engineering drawings.
B. Connect force-main piping to building's sanitary force mains specified in Division 22 Section "Sanitary Waste and Vent Piping." Terminate piping where indicated.
C. Make connections to existing piping and underground manholes.
1. Use commercially manufactured wye fittings for piping branch connections. Remove section of existing pipe, install wye fitting into existing piping, and encase entire wye fitting plus 6-inch (150-mm) overlap with not less than 6 inches (150 mm) of concrete with 28-day compressive strength of 3000 psi (20.7 MPa).
2. Make branch connections from side into existing piping, NPS 4 to NPS 20 (DN 100 to DN 500). Remove section of existing pipe, install wye fitting into existing piping, and encase entire wye with not less than 6 inches (150 mm) of concrete with 28-day compressive strength of 3000 psi (20.7 MPa).

3. Make branch connections from side into existing piping, NPS 21 (DN 525) or larger, or to underground manholes by cutting opening into existing unit large enough to allow 3 inches (76 mm) of concrete to be packed around entering connection. Cut end of connection pipe passing through pipe or structure wall to conform to shape of and be flush with inside wall unless otherwise indicated. On outside of pipe or manhole wall, encase entering connection in 6 inches (150 mm) of concrete for minimum length of 12 inches (300 mm) to provide additional support of collar from connection to undisturbed ground.
    a. Use concrete that will attain a minimum 28-day compressive strength of 3000 psi (20.7 MPa) unless otherwise indicated.
    b. Use epoxy-bonding compound as interface between new and existing concrete and piping materials.
4. Protect existing piping and manholes to prevent concrete or debris from entering while making tap connections. Remove debris or other extraneous material that may accumulate.

D. Connect to grease oil and sand interceptors specified in Division 2 Section "Sanitary Sewer."

3.09 CLOSING ABANDONED SANITARY SEWER SYSTEMS

A. The Contractor shall be responsible for removal and/or relocation of existing utilities as necessary, whether shown or not shown on the Drawings. At locations where conflicts occur with proposed sanitary sewer improvements, removal and relocation shall be at no additional cost to the Owner.

B. Abandoned Piping: Close and grout fill open ends of abandoned underground piping indicated to remain in place. Include closures strong enough to withstand hydrostatic and earth pressures that may result after ends of abandoned piping have been closed. Use either procedure below:
1. Close open ends of piping with at least 8-inch- (203-mm-) thick, brick masonry bulkheads.
2. Close open ends of piping with threaded metal caps, plastic plugs, or other acceptable methods suitable for size and type of material being closed. Do not use wood plugs.

C. Abandoned Manholes: Excavate around manhole as required and use either procedure below:
1. Remove manhole and close open ends of remaining piping.
2. Remove top of manhole down to at least 36 inches (915 mm) below final grade. Fill to within 12 inches (300 mm) of top with gravel, or compacted dirt. Fill to top with concrete.

D. Backfill to grade according to Division 31 Section “Earth Moving”

3.10 IDENTIFICATION

A. Materials and their installation are specified in Division 31 Section "Earth Moving." Arrange for installation of green warning tapes directly over piping and at outside edges of underground manholes.
1. Use warning tape or detectable warning tape over ferrous piping.
2. Use detectable warning tape over nonferrous piping and over edges of underground manholes.

3.11 FIELD QUALITY CONTROL

A. Inspect interior of piping to determine whether line displacement or other damage has occurred. Inspect after approximately 24 inches (600 mm) of backfill is in place, and again at completion of Project.
1. Submit separate report for each system inspection.
2. Defects requiring correction include the following:
    a. Alignment: Less than full diameter of inside of pipe is visible between structures.
    b. Deflection: Flexible piping with deflection that prevents passage of ball or cylinder of size not less than 95 percent of piping diameter.
    c. Damage: Crushed, broken, cracked, or otherwise damaged piping.
    d. Infiltration: Water leakage into piping.
    e. Exfiltration: Water leakage from or around piping.
3. Replace defective piping using new materials, and repeat inspections until defects are within allowances specified.
4. Re-inspect and repeat procedure until results are satisfactory.

B. Test new piping systems, and parts of existing systems that have been altered, extended, or repaired, for leaks and defects.

1. Do not enclose, cover, or put into service before inspection and approval.
2. Test completed piping systems according to requirements of authorities having jurisdiction.
3. Schedule tests and inspections by authorities having jurisdiction with at least 24 hours' advance notice.
4. Submit separate report for each test to General Contractor within 2 days of test.
5. If authorities having jurisdiction do not have published procedures, perform tests as follows:
   a. Hydrostatic Tests: Test sanitary sewerage according to requirements of authorities having jurisdiction and the following:
      1) Fill sewer piping with water. Test with pressure of at least 10-foot (3-m) head of water, and maintain such pressure without leakage for at least 15 minutes.
      2) Close openings in system and fill with water.
      3) Purge air and refill with water.
      4) Disconnect water supply.
      5) Test and inspect joints for leaks.
      6) Allowable leakage is a maximum of 50 gal. Per inch of nominal pipe size per mile of pipe per day.
      7) Option: Test ductile iron piping according to AWWA C600, Section “Hydrostatic Testing”. Use test pressure of at least 10 psig.
6. Air Tests: Test sanitary sewerage according to requirements of authorities having jurisdiction, UNI-B-6, and the following:
   a. Option: Test plastic gravity sewer piping according to ASTM F 1417.
7. Force Main: Perform hydrostatic test after thrust blocks, supports, and anchors have hardened. Test at pressure not less than 1-1/2 times the maximum system operating pressure, but not less than 150 psig (1035 kPa).
   a. PVC Piping: Test according to AWWA M23, "Testing and Maintenance" Chapter.
8. Manholes: Perform hydraulic test according to ASTM C 969 (ASTM C 969M).

C. Leaks and loss in test pressure constitute defects that must be repaired.

D. Replace leaking piping using new materials, and repeat testing until leakage is within allowances specified.

3.12 CLEANING

A. Clean dirt and superfluous material from interior of piping flush with potable water**.**

END OF SECTION 333000

CONFORMANCE SUBMITTAL

SECTION 333000 – SANITARY SEWER

Project Location _____
(*City, State*)

General Contractor: _____
(*Company Name, Phone Number*)

_____
(*Address*)

Sub-Contractor: _____
(*Company Name, Phone Number*)

_____
(*Address*)

The following products have been selected (check one box) for use in this project from the list of acceptable products specified:

Piping Materials:

☐ Ductile-Iron Pipe, ASTM A746
☐ Polyvinyl Chloride (PVC) Pipe, ASTM D3034, SDR 35, Elastomeric Gasket Joints ASTM F477
☐ Other per AHJ: _____

Manholes:

☐ Precast with Cored or Cast Holes with Properly Sized Boots
☐ Other per AHJ: _____

I represent to City/Owner/Engineer that the products selected will be installed in compliance with the applicable codes for the authorities having jurisdiction and in accordance with the contract documents. If noncompliance is discovered the General Contractor shall make or cause to be made all necessary corrections to meet the applicable codes and specifications. Immediately or as directed by Owner the work shall be completed without additional cost to the Owner and / or the contract.

Sub-Contractor: _____
(*Signature of the Authorized Agent of the Sub-Contractor*) Date

_____
(*Print Name of the Authorized Agent of the Sub-Contractor*)

General Contractor: _____
(*Signature of the Authorized Agent of the General Contractor*) Date

_____
(Print Name of the Authorized Agent of the General Contractor)

SANITARY SEWER CERTIFICATION FORM

Project	
Date	
Engineer	
General Contractor	
Utility Contractor	
Const. Mgr.	

ENGINEER CERTIFICATION (If required)
I certify that the sanitary sewer system for the above referenced project has been installed and tested in accordance with local code and Project Plans and Specifications dated _____**.**

Engineer _____
Registration No._____ Affix Seal Here (not valid unless sealed)
Date _____

GENERAL CONTRACTOR CERTIFICATION (Required)
I certify that the sanitary sewer system for the above referenced project has been installed and tested in accordance with local code and Project Plans and Specifications dated _____**.**

General Contractor _____
License No._____
Date _____

UTILITY CONTRACTOR CERTIFICATION (Required)
I certify that the sanitary sewer system for the above referenced project has been installed and tested in accordance with local code and Project Plans and Specifications dated _____**.**

Utility Contractor _____
License No._____
Date _____

***** Submit this certification form with test results, local certificates, etc.

SECTION 33 41 00

STORM UTILITY DRAINAGE PIPING

PART 1 - GENERAL

1.01 RELATED DOCUMENTS

A. Drawings and general provisions of the Contract, including General and Supplementary Conditions and all Specification Sections, apply to this Section.

1.02 SUMMARY

A. Section Includes:
1. Pipe and fittings.
2. Nonpressure transition couplings.
3. Pressure pipe couplings.
4. Expansion joints and deflection fittings.
5. Backwater valves.
6. Cleanouts.
7. Drains.
8. Encasement for piping.
9. Manholes.
10. Channel drainage systems.
11. Catch basins.
12. Stormwater inlets.
13. Stormwater detention structures.
14. Pipe outlets.
15. Dry wells.
16. Stormwater disposal systems.

1.03 STANDARDS

A. American Society For Testing and Materials (ASTM)
1. A185 – Steel Welded Wire Fabric, Plain, for Concrete Reinforcement
2. A615 – Deformed and Plain Billet-Steel Bars for Concrete Reinforcement
3. A760 – Corrugated Steel Pipe, Metallic-Coated, for Sewers and Drains
4. A798 – Installation of Corrugated-Steel Pipe for Sewers and Other Applications
5. A929 – Metallic-Coated by the Hot-Dip Process for Corrugated Steel Pipe
6. C76 – Reinforced Concrete Culvert, Storm Drain, and Sewer Pipe
7. C443 – Joints for Concrete Pipe and Manholes, Using Rubber Gaskets
8. C478 – Precast Reinforced Concrete Manhole Sections
9. C913 – Precast Concrete Water and Wastewater Structures
10. C1479 – Installation of Reinforced Concrete Pipe
11. C990-01A – Joints for Concrete Pipe, Manholes, and Precast Box Sections Using Preformed Flexible Joint Sealants
12. D1056 – Flexible Cellular Materials-Sponge or Expanded Rubber
13. D2306 – Annular Corrugated Profile Wall Polyethylene pipe and Fittings for Gravity Flow Storm Sewer and Subsurface Drainage Applications
14. D2321 – Installation of Thermoplastic Pipe for Sewer/Gravity-Flow Applications
15. D3034 – Type PSM Poly(Vinyl Chloride) (PVC) Sewer Pipe and Fittings
16. D3212 – Joints for Drain and Sewer Plastic Pipes Using Elastomeric Seals
17. F477 – Elastomeric Seals (Gaskets) for Joining Plastic Pipe
18. F794 – Poly(Vinyl Chloride) (PVC) Profile Gravity Sewer Pipe and Fittings Based on Controlled Inside Diameter
19. F949 – Poly(Vinyl Chloride) (PVC) Corrugated Sewer Pipe With a Smooth Interior and Fittings
20. F2418 – Polypropylene (PP) Corrugated Wall Stormwater Collection Chambers
21. F2306 – Annular Corrugated Profile Wall Polyethylene (PE) Pipe and Fittings

22. F2562 – Steel Reinforced Thermoplastic Ribbed Pipe
23. C1504 - Precast Steel Reinforced Three Sided Concrete Structures

B. American Association of State Highway and Transportation Officials (AASHTO)
1. M36 – Corrugated Steel Pipe, Metallic-Coated, for Sewers and Drains
2. M198 – Joints for Circular Concrete Sewer and Culvert Pipe Using Flexible Watertight Gaskets
3. M252 – Corrugated Polyethylene Drainage Tubing
4. M274 – Aluminum-Coated (Type 2), for Corrugated Steel Pipe
5. M288 – Geotextile Specification for Highway Applications
6. M294 – Corrugated Polyethylene Pipe.
7. M36 – Metallic Coated Corrugated Steel Culverts and Underdrains
8. M43 – Sizes of Aggregate for Road and Bridge Construction
9. M190 – Bituminous Coated Corrugated Metal Culvert Pipe and Pipe Arches
10. M199 – Standard Specification for Precast Reinforced Concrete Manhole Sections
11. AASHTO LRFD Bridge Design Specifications Sections 3 & 12

C. American Water Works Association (AWWA)
1. C110 – Ductile-Iron and Gray-Iron Fittings, 3 in through 48 in (75 mm through 1200 mm), for Water and Other Liquids (revision of ANSI/AWWA C110/A21.10-93)
2. C111 – Rubber-Gasket Joints for Ductile-Iron Pressure Pipe and Fittings
3. C151 – Ductile-Iron Pipe, Centrifugally Cast, for Water

D. American Concrete Institute (ACI)
1. 301 – Structural Concrete for Buildings, Specifications for
2. 318 –Building Code Requirements for Structural Plain Concrete

1.04 SUBMITTALS

A. The General Contractor and the Subcontractor shall execute the Conformance Submittals at the end of this section:
1. Storm Drainage Conformance Submittal

B. Product Data: For each type of product indicated.

C. Shop Drawings:
1. Manholes: Include plans, elevations, sections, details, frames, and covers.
2. Catch basins stormwater inlets and dry wells. Include plans, elevations, sections, details, frames, covers, and grates.
3. Stormwater Detention Structures: Include plans, elevations, sections, details, frames, covers, and concrete design-mix reports.

D. Product Certificates: For each type of cast-iron soil pipe and fitting, from manufacturer.

E. Field quality-control reports.

F. Project Record Drawings: Accurately record as-built locations of pipe runs, connections, catch basins, cleanouts, top elevations and invert elevations. Identify and describe unexpected variations of subsurface conditions and location of any utilities encountered.

1.05 QUALITY ASSURANCE

A. All costs associated with re-inspection due to failures shall be paid for by the Contractor at no additional expense to the Owner. Owner reserves the right to direct any inspection that is deemed necessary. Contractor shall provide free access to site for inspection activities.

1.06 DELIVERY, STORAGE, AND HANDLING

A. Do not store plastic, pipe, and fittings in direct sunlight with the exception of Corrugated High Density Polyethylene Pipe and Fittings.

B. All pipe shall be protected against impact, shock and free fall, and only equipment of sufficient capacity and proper design shall be used in the handling of the pipe. Pipes and chambers shall not be rolled or dragged over gravel or rock during handling. The Contractor shall take necessary precautions to ensure the method used in lifting or placing the pipe or chambers does not induce stress fatigue in the pipe or chamber and the lifting device used uniformly distributes the weight of the pipe or chamber along the axis or circumference. Storage of pipe on the job shall be in accordance with the pipe manufacturer’s recommendations.

C. Protect pipe, pipe fittings, and seals from dirt and damage.
D. Damage to Pipe or Chambers:
   1. Each length of pipe or chamber shall be inspected for defects and cracks before carefully being lowered into the trench.
   2. Bituminous coated pipe shall be handled with special care and repair of damaged coating shall conform to AASHTO M190.
   3. Pipe or chambers which are defective from any cause, including damage caused by handling, storage or any other reason as determined by the Owner to be not repairable, shall be unacceptable for installation and shall be replaced at no cost to the Owner and as directed by the Owner.
   4. Pipe or chambers that are damaged or disturbed through any cause prior to acceptance of the work shall be repaired, realigned or replaced as directed by the Owner at no expense to the Owner.
E. Handle manholes according to manufacturer's written rigging instructions.
F. Handle catch basins and stormwater inlets according to manufacturer's written rigging instructions.

1.07 PROJECT CONDITIONS

A. Removal/Relocation of Existing Utilities: The Contractor shall be responsible for removal and/or relocation of existing utilities, whether shown or not shown on the drawings, at locations where conflicts occur with proposed storm drainage improvements. Removal and relocation shall be at no additional cost to the Owner.
B. Interruption of Existing Storm Drainage Service: Do not interrupt service to facilities occupied by Owner or others unless permitted under the following conditions and then only after arranging to provide temporary service according to requirements indicated:
   1. Notify Owner no fewer than seven days in advance of proposed interruption of service.
   2. Do not proceed with interruption of service without Owner's written permission.

PART 2 - PRODUCTS

2.01 DUCTILE-IRON, CULVERT PIPE AND FITTINGS

A. Pipe: ASTM A 716, for push-on joints.
B. Standard Fittings: AWWA C110, ductile or gray iron, for push-on joints.
C. Compact Fittings: AWWA C153, for push-on joints.
D. Gaskets: AWWA C111, rubber.

2.02 ALUMINIZED PIPE AND FITTINGS

A. Aluminized Steel Type 2 Corrugated Steel Pipe 2 (CMP):
   1. Pipe shall meet requirements of ASTM A929 or AASHTO M 274 or ASTM A760
   2. Minimum gauge shall be 16 gauge for pipe diameters 10-24 inches, 14 gage for diameters 30-48 inches. Stormwater detention systems only: 12 gage for diameters 54-96 inches and 10 gauge for diameters 102 inches and larger, but not less than the diameter indicated on the drawings.
   3. Each pipe shall be clearly marked to show the class or gauge, date of manufacture and name or trademark of the manufacturer.
   4. Joints shall be fully corrugated 10” wide outside collars or coupling bands of aluminized steel angles riveted near the ends and bolted through angles to draw the bands tight for silt-tight designations. Additionally, a 7 “wide by 3/8” thick one piece continuous neoprene gasket per ASTM D1056 shall be provided at watertight designations.
   5. Maximum permitted diameter for CMP storm drainage piping is 48”
   6. CMP larger than 48”diameter is allowed for subsurface stormwater detention systems only.
B. Aluminized Steel Type 2 Spiral Ribbed Pipe (Type IR)
   1. Pipe shall meet the requirements of ASTM A929 and AASHTO M274 or ASTM A760 with ¾” x ¾” x 7-1/2” continuous external ribs in accordance with the applicable requirements of AASHTO M-36 or ASTM A760 such as “Ultra-Flo” by Contech or approved equal.

2. Minimum gauge shall be 16 gauge for pipe diameters 10-24 inches and 14 gauge for diameters 30-48 inches, but not less than the diameter indicated on the drawings.
3. Each pipe shall be clearly marked to show the class or gauge, date of manufacture and name or trademark of the manufacturer.
4. Joints shall be fully corrugated 10” wide outside collars or coupling bands of aluminized steel angles riveted near the ends and bolted through angles to draw the bands tight for silt-tight designations. Additionally, a 7 “ wide by 3/8” thick one piece continuous neoprene gasket per ASTM D1056 shall be provided at watertight designations
5. Pipe sizes, gages and corrugations shall be as shown on the project plans.
6. Maximum permitted diameter is 48”

2.03 HDPE PIPE AND FITTINGS

A. Steel Reinforced Thermoplastic Ribbed Smooth Interior Pipe

1. Pipe lengths shall be joined on site using bell and spigots reinforced with steel that is fully encased in a pressure rated high density polyethylene and shall be watertight to an internal water pressure of 15 psi when tested in accordance with ASTM D3212.
2. Gaskets shall meet the requirements of ASTM F477
3. Maximum Diameter shall be 48”

B. High Density Polyethylene Pipe (HDPE) Smooth Interior Pipe:

1. Pipe and Fittings: Shall conform to AASHTO M252 and M294 and/or ASTM F2360 unless otherwise shown on the Drawings.
2. Gaskets: Rubber gaskets shall meet requirements of ASTM F477 with joints conforming to AASHTO M294, watertight designations
3. Maximum permitted diameter is 48”.
4. See drawings for bedding details.
5. HDPE Pipe shall be NTPEP Certified.
6. Approved Manufacturers:
   a. Advance Drainage Systems, Inc., 3300 Riverside Drive, Columbus, Ohio 43221 (614) 457-3051
   b. Hancor, Inc., 401 Olive Street, Findlay, Ohio 45840 (888) 367-7473
   c. Lane Enterprises, Inc. (for Type S Lok-Tite Pipe) 3905 Hartzdale Drive, Suite 514, Camp Hill, PA 17011 (717) 761-8175
   d. Quality Culvert, Inc., 25726 County Road 561, Astatula, FL 34750 (800) 881-1100

2.04 PVC PIPE AND FITTINGS

A. PVC Cellular-Core Piping:

1. PVC Cellular-Core Pipe and Fittings: ASTM F 891, Sewer and Drain Series, PS 50 minimum stiffness, PVC cellular-core pipe with plain ends for solvent-cemented joints.
2. Fittings: ASTM D 3034, SDR 35, PVC socket-type fittings.

B. PVC Corrugated Sewer Piping:

1. Pipe: ASTM F 949, and ASTM F 794 PVC, corrugated pipe with bell-and-spigot ends for gasketed joints.
2. Fittings: ASTM F 949, PVC molded or fabricated, socket type.
3. Gaskets: ASTM F 477, elastomeric seals with joints conforming to ASTM D3212
4. Approved Manufacturers:
   a. Contech “A2000”, 1001 Grove Street, Middletown, OH 45044

2.05 CONCRETE PIPE AND FITTINGS

A. Reinforced-Concrete Pipe and Fittings: ASTM C 76 (ASTM C 76M).

1. Bell-and-spigot or tongue-and-groove ends and gasketed joints with ASTM C 443 (ASTM C 443M), rubber gaskets or sealant joints with ASTM C 990 (ASTM C 990M), bitumen or butyl-rubber sealant for silt-tight designations.
2. Class III, unless otherwise indicated on the Drawings.

2.06 NONPRESSURE TRANSITION COUPLINGS

A. Comply with ASTM C 1173, elastomeric, sleeve-type, reducing or transition coupling, for joining underground nonpressure piping. Include ends of same sizes as piping to be joined, and corrosion-resistant-metal tension band and tightening mechanism on each end.

B. Sleeve Materials:
   1. For Concrete Pipes: ASTM C 443 (ASTM C 443M), rubber.
   2. For Cast-Iron Soil Pipes: ASTM C 564, rubber.
   3. For Fiberglass Pipes: ASTM F 477, elastomeric seal or ASTM D 5926, PVC.
   4. For Plastic Pipes: ASTM F 477, elastomeric seal or ASTM D 5926, PVC.
   5. For Dissimilar Pipes: ASTM D 5926, PVC or other material compatible with pipe materials being joined.

C. Unshielded, Flexible Couplings:
   1. Basis-of-Design Product: Subject to compliance with requirements, provide product indicated on the Drawings.

D. Shielded, Flexible Couplings:
   1. Basis-of-Design Product: Subject to compliance with requirements, provide product indicated on Drawings

E. Ring-Type, Flexible Couplings:
   1. Basis-of-Design Product: Subject to compliance with requirements, provide product indicated on Drawings

2.07 DRAINS

A. Sub Drains:
   1. Shall be perforated PVC or HDPE unless otherwise indicated on the Drawings. Installation shall be as shown on the drawings.

2.08 CLEANOUTS AND PLUGS

A. Installation shall be as shown on the details and at locations shown on the drawings.

B. All cleanouts shall have a 2’ x 2’ x 6” thick concrete apron.

2.09 ENCASEMENT FOR PIPING

A. Standard: ASTM A 674 or AWWA C105.

B. Material: Linear low-density polyethylene film of 0.008-inch (0.20-mm) minimum thickness.

C. Form: Sheet or tube.

D. Color: Black.

2.10 MANHOLES

A. Standard Precast Concrete Manholes:
   1. Description: ASTM C 478 (ASTM C 478M) and AASHTO M199, precast, reinforced concrete, of depth indicated, with provision for sealant joints. Heavy-duty traffic rated in accordance with Department of Transportation Standards in which project is located.
   2. Diameter: 48 inches (1200 mm) minimum unless otherwise indicated.
   3. Ballast: Increase thickness of precast concrete sections or add concrete to base section as required preventing flotation.
   4. Base Section: 6-inch (150-mm) minimum thickness for floor slab and 4-inch (102-mm) minimum thickness for walls and base riser section, and separate base slab or base section with integral floor.
   5. Riser Sections: 4-inch (102-mm) minimum thickness and lengths to provide depth indicated.
   6. Top Section: Eccentric-cone type unless concentric-cone or flat-slab-top type is indicated, and top of cone of size that matches grade rings.
   7. Joint Sealant: ASTM C 990 (ASTM C 990M), bitumen or butyl rubber.
   8. Resilient Pipe Connectors: ASTM C 923 (ASTM C 923M), cast or fitted into manhole walls, for each pipe connection.
   9. Steps: Individual FRP steps; FRP ladder; or ASTM A 615/A 615M, deformed, 1/2-inch (13-mm) steel reinforcing rods encased in ASTM D 4101, PP, wide enough to allow worker to place both feet on one step and designed to prevent lateral slippage off step. Cast or anchor

steps into sidewalls at 16-inch (400-mm) intervals. Omit steps if total depth from floor of manhole to finished grade is less than 42 inches (1050 mm).

10. Grade Rings: Reinforced-concrete rings, 6- to 9-inch (150- to 225-mm) total thickness, to match diameter of manhole frame and cover, and height as required to adjust manhole frame and cover to indicated elevation and slope.

B. Designed Precast Concrete Manholes:
   1. Description: ASTM C 913; designed according to ASTM C 890 for A-16 (AASHTO HS20-44), heavy-traffic, structural loading; of depth, shape, and dimensions indicated, with provision for sealant joints.
   2. Ballast: Increase thickness of one or more precast concrete sections or add concrete to manhole as required preventing flotation.
   3. Joint Sealant: ASTM C 990 (ASTM C 990M), bitumen or butyl rubber.
   4. Resilient Pipe Connectors: ASTM C 923 (ASTM C 923M), cast or fitted into manhole walls, for each pipe connection.
   5. Steps: Individual FRP steps; FRP ladder; or ASTM A 615/A 615M, deformed, 1/2-inch (13-mm) steel reinforcing rods encased in ASTM D 4101, PP, wide enough to allow worker to place both feet on one step and designed to prevent lateral slippage off step. Cast or anchor steps into sidewalls at 16-inch (400-mm) intervals. Omit steps if total depth from floor of manhole to finished grade is less than 42 inches (1050 mm).
   6. Grade Rings: Reinforced-concrete rings, 6- to 9-inch (150- to 225-mm) total thickness, to match diameter of manhole frame and cover, and of height required to adjust manhole frame and cover to indicated elevation and slope.

C. Manhole Frames and Covers:
   1. Description: As shown on the Drawings, otherwise provide ferrous; 24-inch (610-mm) ID by 7- to 9-inch (175- to 225-mm) riser with 4-inch- (102-mm-) minimum width flange and 26-inch-(660-mm-) diameter security bolted cover.
   2. Material: ASTM A 536, Grade 60-40-18 ductile iron unless otherwise indicated.

2.11 BEDDING AND BACKFILL MATERIAL

A. Bedding material shall be as specified by trenching and bedding details shown on the drawings.

B. Where the foundation material is found to be of poor supporting value or of rock, the Owner may make minor adjustments in the location of the pipe to provide a more suitable foundation. Where this is not practical, the foundation shall be conditioned by removing the existing foundation material by undercutting to the depth as directed by the geotechnical engineer and backfilling with either a suitable local material secured from unclassified excavation or borrow excavation at the nearest accessible location along the project, or foundation conditioning material consisting of crushed stone or gravel or a combination of sand and crushed stone or gravel approved by geotechnical engineer as being suitable for the purpose intended. The selection of the type of backfill material to be used for foundation conditioning will be made by the geotechnical engineer.

2.12 CONCRETE

A. General: Cast-in-place concrete according to ACI 318, ACI 350/350R (ACI 350M/350RM), and the following:
   1. Cement: ASTM C 150, Type II.
   2. Fine Aggregate: ASTM C 33, sand.
   3. Coarse Aggregate: ASTM C 33, crushed gravel.
   4. Water: Potable.

B. Portland Cement Design Mix: (28 day compressive strength) 4000 psi (27.6 MPa) minimum, with 0.45 maximum water/cementitious materials ratio.
   1. Reinforcing Fabric: ASTM A 185/A 185M, steel, welded wire fabric, plain.
   2. Reinforcing Bars: ASTM A 615/A 615M, Grade 40 or 60 (420 MPa) deformed steel.

C. Manhole, Catch Basin and Storm Inlet Channels and Benches: Factory or field formed from concrete. Portland cement design mix, 4000 psi (27.6 MPa) minimum, with 0.45 maximum water/cementitious materials ratio. Include channels and benches in manholes.

1. Channels: Concrete invert, formed to same width as connected piping, with height of vertical sides to three-fourths of pipe diameter. Form curved channels with smooth, uniform radius and slope.
    a. Invert Slope: 1 percent through manhole unless otherwise detailed on the Drawings.
2. Benches: Concrete, sloped to drain into channel.
    a. Slope: 4 percent unless otherwise detailed on the drawings..

D. Ballast and Pipe Supports: Portland cement design mix, 3000 psi (20.7 MPa) minimum, with 0.58 maximum water/cementitious materials ratio.
1. Reinforcing Fabric: ASTM A 185/A 185M, steel, welded wire fabric, plain.
2. Reinforcing Bars: ASTM A 615/A 615M, Grade 60 (420 MPa) deformed steel.

2.13 CATCH BASINS

A. Standard Precast Concrete Catch Basins:
1. Description: ASTM C 478 (ASTM C 478M), precast, reinforced concrete, heavy duty (H20), of depth indicated, with provision for sealant joints.
2. Base Section: 6-inch (150-mm) minimum thickness for floor slab and 6-inch (150-mm) minimum thickness for walls and base riser section, and separate base slab or base section with integral floor.
3. Riser Sections: 6-inch (150-mm) minimum thickness, 48-inch (1200-mm) diameter, and lengths to provide depth indicated.
4. Top Section: Eccentric-cone type unless concentric-cone or flat-slab-top type is indicated. Top of cone of size that matches grade rings.
5. Joint Sealant: ASTM C 990 (ASTM C 990M), bitumen or butyl rubber.
6. Grade Rings: Include two or three reinforced-concrete rings, of 6- to 9-inch (150- to 225-mm) total thickness, that match 24-inch- (610-mm-) diameter frame and grate.
7. Steps: Individual FRP steps; FRP ladder; or ASTM A 615/A 615M, deformed, 1/2-inch (13-mm) steel reinforcing rods encased in ASTM D 4101, PP, wide enough to allow worker to place both feet on one step and designed to prevent lateral slippage off step. Cast or anchor steps into sidewalls at 16-inch (400-mm) intervals. Omit steps if total depth from floor of manhole to finished grade is less than 42 inches (1050 mm).
8. Pipe Connectors: ASTM C 923 (ASTM C 923M), resilient, of size required, for each pipe connecting to base section.

B. Designed Precast Concrete Catch Basins: ASTM C 913, precast, reinforced concrete; designed according to ASTM C 890 for A-16 (ASSHTO HS20-44), heavy-traffic, structural loading; of depth, shape, and dimensions indicated, with provision for joint sealants.
1. Joint Sealants: ASTM C 990 (ASTM C 990M), bitumen or butyl rubber.
2. Grade Rings: Include two or three reinforced-concrete rings, of 6- to 9-inch (150- to 225-mm) total thickness, that match 24-inch- (610-mm-) diameter frame and grate.
3. Steps: Individual FRP steps; FRP ladder; or ASTM A 615/A 615M, deformed, 1/2-inch (13-mm) steel reinforcing rods encased in ASTM D 4101, PP, wide enough to allow worker to place both feet on one step and designed to prevent lateral slippage off step. Cast or anchor steps into sidewalls at 16-inch (400-mm) intervals. Omit steps if total depth from floor of manhole to finished grade is less than 42 inches (1050 mm).
4. Pipe Connectors: ASTM C 923 (ASTM C 923M), resilient, of size required, for each pipe connecting to base section.

C. Grate and Frame: Per details shown on the drawings. Provide hood with stencil or casting “Dump No Waste – Drains to Waterways” or equal. Provide local casting if required. Provide 6 inch thick rectangular concrete apron, with 18 inch minimum width measured from the edge of structure frame to the end of the concrete apron, around all structure frames located in asphalt pavement areas. Provide saw cuts from each corner of the concrete apron to the frame of the structure as shown on the plan.
1. Rectangular Frames and Grates: ASTM A 536, Grade 60-40-18, ductile iron designed for A-16, heavy duty (H20) structural loading. Include flat grate with small square or short-slotted drainage openings.
    a. Size: 24 by 24 inches (610 by 610 mm) minimum unless otherwise indicated.
    b. Grate Free Area: Approximately 50 percent unless otherwise indicated.

2. Round, Manhole Type Frames and Grates: ASTM A 536, Grade 60-40-18, ductile iron designed for A-16, heavy duty (H20) structural loading. Include 24-inch (610-mm) ID by 7- to 9-inch (175- to 225-mm) riser with 4-inch (102-mm) minimum width flange, and 26-inch- (660-mm-) diameter flat grate with small square or short-slotted drainage openings.
   a. Grate Free Area: Approximately 50 percent unless otherwise indicated.

2.14 STORMWATER INLETS

A. Curb Inlets: Made with vertical curb opening of materials and dimensions according to the details shown on the Drawings.

B. Gutter Inlets: Made with horizontal gutter opening of materials and dimensions according to the details shown on the Drawings. Include heavy-duty frames and grates.

C. Combination Inlets: Made with vertical curb and horizontal gutter openings of materials and dimensions according to the details shown on the Drawings. Include heavy-duty frames and grates.

D. Frames and Grates: Heavy duty and according to the details shown on the Drawings.

2.15 STORMWATER DETENTION STRUCTURES

A. Cast-in-Place Concrete, Stormwater Detention Structures: Constructed of reinforced-concrete bottom, walls, and top; designed according to ASTM C 890 for A-16 (AASHTO HS20-44), heavy-traffic, structural loading; of depth, shape, dimensions, and appurtenances indicated.
   1. Ballast: Increase thickness of concrete as required preventing flotation.
   2. Grade Rings: Include two or three reinforced-concrete rings, of 6- to 9-inch (150- to 229-mm) total thickness, that match 24-inch- (610-mm-) diameter frame and cover.
   3. Steps: Individual FRP steps; FRP ladder; or ASTM A 615/A 615M, deformed, 1/2-inch (13-mm) steel reinforcing rods encased in ASTM D 4101, PP, wide enough to allow worker to place both feet on one step and designed to prevent lateral slippage off step. Cast or anchor steps into sidewalls at 16-inch (400-mm) intervals. Omit steps if total depth from floor of manhole to finished grade is less than 42 inches (1050 mm).

B. Corrugated Aluminized Steel Detention Systems:
   1. Piping shall comply with AASHTO M36 for diameters 12”-144”
   2. The material shall be Aluminized Steel Type 2 conforming to AASHTO M274
   3. All fittings shall be reinforced per ASTM A998

C. Precast Concrete Three Sided Detention Systems:
   1. Precast Concrete Detention Structures shall be manufactured per ASTM C1504
   2. Concrete shall be 4,000 psi mix and reinforcing steel shall have a minimum yield strength of 600 ksi

D. Manhole Frames and Covers: ASTM A 536, Grade 60-40-18, ductile-iron castings designed for heavy-duty service. Include 24-inch (610-mm) ID by 7- to 9-inch (175- to 225-mm) riser with 4-inch (102-mm) minimum width flange, and 26-inch- (660-mm-) diameter cover. Include indented top design with lettering cast into cover, using wording equivalent to "STORM SEWER."

2.16 PIPE OUTLETS

A. Head Walls: Construction shall be according to details shown on the drawings. Headwalls shall be cast-in-place reinforced concrete, with apron and tapered sides unless otherwise indicated.

B. Riprap Aprons: Broken, irregularly sized and shaped, graded stone according to Department of Transportation specifications for the state in which the project is located or by using NSSGA's "Quarried Stone for Erosion and Sediment Control”. Unless otherwise shown on the drawings the median stone size used shall be 6 inches (150 mm). Riprap apron will be constructed of stone shaped according to the detail on the Drawings with an underlayment of medium weight non-woven geotextile fabric.
   1. Average Size: NSSGA No. R-6, screen opening 6 inches (150 mm).

C. Concrete Lined Channels: Construction shall be in accordance with details shown on the drawings.

D. Flared-End Sections: Shall meet Department of Transportation standards for the state in which the project is located unless otherwise indicated on the drawings.

2.17 DRY WELLS

A. Description: ASTM C 913, precast, reinforced, perforated concrete rings. Include the following:
   1. Floor: Cast-in-place concrete.
   2. Cover: Liftoff-type concrete cover with cast-in lift rings.
   3. Wall Thickness: 4 inches (102 mm) minimum with 1-inch (25-mm) diameter or 1-by-3-inch-(25-by-76-mm-) maximum slotted perforations arranged in rows parallel to axis of ring.
      a. Total Free Area of Perforations: Approximately 15 percent of ring interior surface.
      b. Ring Construction: Designed to be self-aligning.
   4. Filtering Material: ASTM D 448, Size No. 24, 3/4- to 2-1/2-inch (19- to 63-mm) washed, crushed stone or gravel.

B. Description: Manufactured PE side panels and top cover that assemble into 50-gal. (190-L) storage capacity units.
   1. Basis-of-Design Product: Subject to compliance with requirements, provide product indicated on Drawings.
   2. Side Panels: With knockout ports for piping and seepage holes.
   3. Top Cover: With knockout port for drain.
   4. Filter Fabric: As recommended by unit manufacturer.
   5. Filtering Material: ASTM D 448, Size No. 24, 3/4- to 2-1/2-inch (19- to 63-mm) washed, crushed stone or gravel.

C. Description: Constructed-in-place aggregate type. Include the following:
   1. Lining: Concrete blocks or precast concrete rings with notches or weep holes.
   2. Filtering Material: ASTM D 448, Size No. 24, 3/4- to 2-1/2-inch (19- to 63-mm) washed, crushed stone or gravel.
   3. Cover: Precast, reinforced-concrete slab designed for structural loading according to ASTM C 890 and made according to ASTM C 913. Include slab dimensions that will extend 12 inches (300 mm) minimum beyond edge of excavation, with bituminous coating over entire surface. Cast cover with opening for manhole in center.
   4. Manhole: 24-inch- (610-mm-) diameter, reinforced-concrete access lid with steel lift rings. Include bituminous coating over entire surface.

2.18 STORMWATER DISPOSAL SYSTEMS

A. Chamber Systems:
   1. Chambers shall meet the requirements of ASTM F2418 and meet the safety factors recommended by Section 12.12 of the AASHTO LRFD Bridge Design Specifications. Loads for design shall be calculated in accordance with Section 3 of the AASHTO LRFD Bridge Design Specifications.
   2. The chamber manufacturer shall provide design data in accordance with ASTM F2418. Installation shall be in accordance with the details shown on the Drawings.
   3. Basis-of-Design Product: Subject to compliance with requirements, provide product indicated on Drawings or comparable product by one of the following:
      a. Advanced Drainage Systems. 4640 Trueman Blvd., Hilliard, Ohio 43026 (800) 433-7473
      b. CULTEC, Inc. 878 Federal Road, PO Box 280, Brookfield, CT 06804 (800) 4-CULTEC.
      c. Hancor Inc. 401 Olive Street, Findlay, OH 45840 (800) 848-3546.
      d. StormTech LLC. 20 Beaver Road, Wetheresfield , CT 06109 (888) 892-2694
   4. Storage and Leaching Chambers: Chamber rows shall provide continuous, unobstructed internal space with no internal support panels in order to provide ease of access for inspection and maintenance. Include number of chambers, distribution piping, end plates, and other standard components as required for system total capacity.
   5. Geotextile: Shall be enclosed in geotextile fabric for sediment capture and maintenance. Fabric shall be located per manufacturer's details.
      a. Geotextile woven or spun filter fabric, in one or more layers, for minimum total unit weight of 4 oz./sq. yd. (135 g/sq. m).
      b. Fabric between chamber bottom and the stone foundation shall be AASHTO M288 Class 1 woven for stabilization and filtration.
      c. Fabric between the top of the chamber and the embedment stone shall be AASHTO M288 Class 2 non-woven for separation.

6. Filtering Material: ASTM D 448, Size No. 24, 3/4- to 2-1/2-inch (19- to 63-mm) washed, crushed stone or gravel.

B. Pipe Systems:

1. Perforated manifold, header, and lateral piping complying with AASHTO M 252M for NPS 10 (DN 250) and smaller, AASHTO M 294M for NPS 12 to NPS 60 (DN 300 to DN 1500). Include proprietary fittings, couplings, seals, and filter fabric.
2. 360 Degree Perforated Aluminized Steel Type 2 Recharge/Detention System conforming to AASHTO M274. All fittings to be reinforced per ASTM A998
3. Basis-of-Design Product: Subject to compliance with requirements, provide product indicated on Drawings or comparable product by one of the following:
   a. Advanced Drainage Systems. 4640 Trueman Blvd., Hilliard, Ohio 43026 (800) 433-7473
   b. Hancor Inc. 401 Olive Street, Findlay, OH 45840 (800) 848-3546.
   c. CONTECH Construction Products, Inc. 9025 Centre Pointe Drive, West Chester, Ohio 45069 (336) 854-2177

PART 3 - EXECUTION

3.01 EARTHWORK

A. Excavation, trenching, and backfilling are specified in Division 31 Section "Earth Moving."

3.02 PIPING INSTALLATION

A. Locations and Arrangements: Contractor shall install all drainage structures, pipe and chambers in the locations shown on the drawings and/or as approved by the Owner. Pipe shall be of the type and sizes specified on the drawings and shall be laid accurately to line and grade. Structures shall be accurately located and properly oriented. Where specific installation is not indicated, follow piping manufacturer's written instructions.

B. Install piping beginning at low point, on prepared foundation, true to grades and alignment indicated with unbroken continuity of invert. Place bell ends of piping facing upstream. Install gaskets, seals, sleeves, and couplings according to manufacturer's written instructions for use of lubricants, cements, and other installation requirements. Lap joint pipes shall be laid with the inside circumferential laps pointing downstream and with the longitudinal laps at the side or quarter points.

C. Install chambers in accordance with manufacturer’s guidelines. Rows of chambers shall be laid out using spacers or appropriate measurements and markings to ensure proper spacing between rows for proper backfill and compaction as specified by the manufacturer.

D. Manholes, catch basins and drain inlets shall be constructed as soon as the pipe laying reaches the location of the structures. If the Contractor continues pipe installation without making provisions for completion of the structures the Owner shall have the authority to stop the pipe installation until the structure is completed.

E. Any structure which is miss-located or oriented improperly shall be removed and reconstructed at its proper location, alignment and orientation without cost to the Owner.

F. Install manholes for changes in direction unless fittings are indicated. Use fittings for branch connections unless direct tap into existing storm drainage is indicated.

G. Precast drainage structures shall be assembled in accordance with the manufacturer’s instructions to form a sound structural unit.

H. Cast-in-Place drainage structures shall be installed in accordance with the details or referenced specifications shown on the drawings. Concrete shall comply with the requirements of this section.

I. Solid concrete brick masonry structures shall be installed in accordance with the details or referenced specifications shown on the drawings. Only solid masonry units may be used. Minimum wall thickness shall be 8 inches and minimum bottom slab thickness shall be 6 inches and extended a minimum of 6 inches outside the structure.

J. Fittings and Connections: Pipe connections to drainage structures shall be made so that the pipe does not project beyond 3 inches inside the wall of the drainage structure and shall be grouted as necessary to make smooth and uniform surfaces on the inside of the structure. Connection

material shall not include large stone, broken block or other deleterious material. Bottom invert connections shall be constructed of concrete form smooth to provide a bench between pipe inverts unless otherwise detailed on the plans.

K. Install proper size increasers, reducers, and couplings where different sizes or materials of pipes and fittings are connected. Reducing size of piping in direction of flow is prohibited.

L. When installing pipe under streets or other obstructions that cannot be disturbed, use pipe-jacking process of micro-tunneling.

M. Install gravity-flow, non-pressure drainage piping according to the following:
   1. Install piping pitched down in direction of flow.
   2. Install piping NPS 6 (DN 150) and larger with restrained joints at tee fittings and at changes in direction. Use corrosion-resistant rods, pipe or fitting manufacturer's proprietary restraint system, or cast-in-place concrete supports or anchors.
   3. Install piping with 24-inch (610-mm) minimum cover.
   4. Install hub-and-spigot, cast-iron soil piping according to CISPI's "Cast Iron Soil Pipe and Fittings Handbook."
   5. Install hubless cast-iron soil piping according to CISPI 310 and CISPI's "Cast Iron Soil Pipe and Fittings Handbook."
   6. Install ductile-iron piping and special fittings according to AWWA C600 or AWWA M41.
   7. Install corrugated steel piping according to ASTM A798 and 798M.
   8. Install HDPE piping according to pipe manufacturer’s installation guidelines for heavy duty drainage applications and ASTM D 2321.
   9. Install PVC profile gravity sewer piping according to ASTM D 2321 and ASTM F 1668.
   10. Install reinforced-concrete sewer piping according to ASTM C 1479 and ACPA's "Concrete Pipe Installation Manual."

N. Install corrosion-protection piping encasement over the following underground metal piping according to ASTM A 674 or AWWA C105:
   1. Hub-and-spigot, cast-iron soil pipe and fittings.
   2. Hubless cast-iron soil pipe and fittings.
   3. Ductile-iron pipe and fittings.
   4. Expansion joints and deflection fittings.

3.03 PIPE JOINT CONSTRUCTION

A. Join gravity-flow, nonpressure drainage piping according to the following:
   1. Join hub-and-spigot, cast-iron soil piping with gasketed joints according to CISPI's "Cast Iron Soil Pipe and Fittings Handbook" for compression joints.
   2. Join hub-and-spigot, cast-iron soil piping with calked joints according to CISPI's "Cast Iron Soil Pipe and Fittings Handbook" for lead and oakum calked joints.
   3. Join hubless cast-iron soil piping according to CISPI 310 and CISPI's "Cast Iron Soil Pipe and Fittings Handbook" for hubless-coupling joints.
   4. Join ductile-iron culvert piping according to AWWA C600 for push-on joints.
   5. Join ductile-iron piping and special fittings according to AWWA C600 or AWWA M41.
   6. Join corrugated steel sewer piping according to ASTM A 798/A 798M.
   7. Join HDPE pipe according to ASTM D 2321
   8. Join PVC cellular-core piping according to ASTM D 2321 and ASTM F 891 for solvent-cemented joints.
   9. Join PVC corrugated sewer piping according to ASTM D 2321 for elastomeric-seal joints.
   10. Join PVC sewer piping according to ASTM D 2321 and ASTM D 3034 for elastomeric-seal joints or ASTM D 3034 for elastomeric-gasketed joints.
   11. Join PVC profile gravity sewer piping according to ASTM D 2321 for elastomeric-seal joints or ASTM F 794 for gasketed joints.
   12. Join reinforced-concrete sewer piping according to ACPA's "Concrete Pipe Installation Manual" for rubber-gasketed joints.
   13. Join dissimilar pipe materials with nonpressure-type flexible couplings.

3.04 BACKWATER VALVE INSTALLATION

A. Install horizontal-type backwater valves in piping where indicated.

B. Install combination horizontal and manual gate-valve type in piping and in manholes where indicated.
C. Install terminal-type backwater valves on end of piping and in manholes where indicated.

3.05 CLEANOUT INSTALLATION

A. Install cleanouts and riser extensions from sewer pipes to cleanouts at grade. Use cast-iron soil pipe fittings in sewer pipes at branches for cleanouts and cast-iron soil pipe for riser extensions to cleanouts. Install piping so cleanouts open in direction of flow in sewer pipe.
   1. Use Heavy-Duty, top-loading classification cleanouts in vehicle-traffic service areas.
B. Set cleanout frames and covers in cast-in-place concrete, 24 by 24 by 6 inches (600 by 600 by 150 mm) deep. Set with tops flush with adjacent grade. At pavement areas and at roads set frames and covers with tops flush pavement surface.

3.06 DRAIN INSTALLATION

A. Install type of drains in locations indicated.
   1. Use Heavy-Duty, top-loading classification drains in vehicle service areas.
B. Install drains according to details on the plans and manufacturer's installation requirements..
C. Fasten grates to drains if indicated.
D. Set drain frames and covers with tops flush with pavement surface.
E. Assemble trench sections with flanged joints.

3.07 MANHOLE INSTALLATION

A. General: Install manholes, complete with appurtenances and accessories indicated.
B. Install precast concrete manhole sections with sealants according to ASTM C 891.
C. Where specific manhole construction is not indicated, follow manhole manufacturer's written instructions.
D. Set tops of frames and covers flush with finished surface of manholes that occur in pavements. Set tops 3 inches (76 mm) above finished surface elsewhere unless otherwise indicated.

3.08 CATCH BASIN INSTALLATION

A. Construct catch basins to sizes and shapes indicated.
B. Frames, Grates and Hoods
   1. Set frames and grates to elevations indicated.
   2. Firmly embedded in mortar approximately 1 inch thick and aligned to fit the top section of the structure.
   3. Brick set in mortar used to adjust the frame to finished grade shall be limited to no more than four (4) courses for precast structures and have a minimum wall thickness of eight (8) inches.

3.09 STORMWATER INLET AND OUTLET INSTALLATION

A. Construct inlet head walls, aprons, and sides of reinforced concrete, as indicated.
B. Construct riprap of broken stone, as indicated.
C. Install outlets that spill onto grade, anchored with concrete, where indicated.
D. Install outlets that spill onto grade, with flared end sections that match pipe, where indicated.
E. Construct energy dissipaters at outlets, as indicated.

3.10 MODIFICATION OF EXISTING STRUCTURES

A. General: The Contractor shall alter, reconstruct and/or convert existing structures where and as shown on the drawings, and/or as approved by the Owner. Alterations shall be performed with the same type, grade and quality material as used in the original construction unless otherwise indicated on the drawings or approved by the Owner.
B. Damage to Existing Structures: The Contractor shall exercise care during all alterations, reconstructions or conversions so as not to damage any portion of the existing structures or pipe to remain. Any damage caused by the Contractor shall be repaired by the Contractor at its own expense and to the satisfaction to the Owner.

3.11 ROOF DRAINS AND LEADERS

A. The site Contractor shall install roof downspout leaders as shown on the drawings to within five (5) feet of the building limits. If work by others is complete then the Contractor shall complete the connection. If future connections will be required by others, the Contractor shall install plugging and material apparatus as necessary to protect and mark the location of its work.

B. All roof drain leader piping connections shall utilize watertight prefabricated fittings and drainage structures.

3.12 DRY WELL INSTALLATION

A. Excavate hole to diameter of at least 6 inches (150 mm) greater than outside of dry well. Do not extend excavation into ground-water table.

B. Install precast, concrete-ring dry wells according to the following:
   1. Assemble rings to depth indicated.
   2. Extend rings to height where top of cover will be approximately 8 inches (203 mm) below finished grade.
   3. Backfill bottom of inside of rings with filtering material to level at least 12 inches (300 mm) above bottom.
   4. Extend effluent inlet pipe 12 inches (300 mm) into rings and terminate into side of tee fitting.
   5. Backfill around outside of rings with filtering material to top level of rings.
   6. Install cover over top of rings.

C. Install manufactured, PE dry wells according to manufacturer's written instructions and the following:
   1. Assemble and install panels and cover.
   2. Backfill bottom of inside of unit with filtering material to level at least 12 inches (300 mm) above bottom.
   3. Extend effluent inlet pipe 12 inches (300 mm) into unit and terminate into side of tee fitting.
   4. Install filter fabric around outside of unit.
   5. Install filtering material around outside of unit.

D. Install constructed-in-place dry wells according to the following:
   1. Install brick lining material dry and laid flat, with staggered joints for seepage. Build to diameter and depth indicated.
   2. Install block lining material dry, with staggered joints and 20 percent minimum of blocks on side for seepage. Install precast concrete rings with notches or weep holes for seepage. Build to diameter and depth indicated.
   3. Extend lining material to height where top of manhole will be approximately 8 inches (203 mm) below finished grade.
   4. Backfill bottom of inside of lining with filtering material to level at least 12 inches (300 mm) above bottom.
   5. Extend effluent inlet pipe 12 inches (300 mm) into lining and terminate into side of tee fitting.
   6. Backfill around outside of lining with filtering material to top level of lining.
   7. Install manhole over top of dry well. Support cover on undisturbed soil. Do not support cover on lining.

3.13 CONCRETE PLACEMENT

A. Place cast-in-place concrete according to ACI 318 and ACI 350R..

B. No concrete or masonry shall be placed when the temperature is below 40 degrees Fahrenheit, or when indications are for lower temperatures within 24 hours, unless protection of concrete and masonry is approved by the Owner. Damage to the structure because of freezing shall be corrected by the Contractor at the Contractor’s sole expense and to the satisfaction of the Owner.

3.14 STORMWATER DISPOSAL SYSTEM INSTALLATION

A. Chamber Systems: Excavate trenches of width and depth, and install system and backfill according to chamber manufacturer's written instructions. Include storage and leaching chambers, filtering material, and filter mat.

B. Piping Systems: Excavate trenches of width and depth, and install piping system, filter fabric, and backfill, according to piping manufacturer's written instructions.

3.15 CONNECTIONS

A. Connect nonpressure, gravity-flow drainage piping in building's storm building drains specified in Division 22 Section "Facility Storm Drainage Piping."

B. Connect force-main piping to building's storm drainage force mains specified in Division 22 Section "Facility Storm Drainage Piping." Terminate piping where indicated.

C. Compliance with Existing Facilities:

1. Connections made into existing drainage facilities shall be performed in accordance with the requirements of the Owner of the facility. Construction within a public right-of-way will conform to all requirements of the regulatory authority having jurisdiction. The Contractor will be required to comply with all such requirements, including securing all required permits and paying all associated costs related to securing the permits. Costs associated with connections shall be included in the Contract Sum.
2. The contractor shall make all required connections of the proposed drainage facilities into existing drainage facilities where a d as shown on the drawings and/or as approved by the Owner.

D. Make connections to existing piping and underground manholes.

1. Use commercially manufactured wye fittings for piping branch connections. Remove section of existing pipe; install wye fitting into existing piping; and encase entire wye fitting, plus 6-inch (150-mm) overlap, with not less than 6 inches (150 mm) of concrete with 28-day compressive strength of 3000 psi (20.7 MPa).
2. Make branch connections from side into existing piping, NPS 4 to NPS 20 (DN 100 to DN 500). Remove section of existing pipe, install wye fitting into existing piping, and encase entire wye with not less than 6 inches (150 mm) of concrete with 28-day compressive strength of 3000 psi (20.7 MPa).
3. Make branch connections from side into existing piping, NPS 21 (DN 525) or larger, or to underground manholes and structures by cutting into existing unit and creating an opening large enough to allow 3 inches (76 mm) of concrete to be packed around entering connection. Cut end of connection pipe passing through pipe or structure wall to conform to shape of and be flush with inside wall unless otherwise indicated. On outside of pipe, manhole, or structure wall, encase entering connection in 6 inches (150 mm) of concrete for minimum length of 12 inches (300 mm) to provide additional support of collar from connection to undisturbed ground.
   a. Use concrete that will attain a minimum 28-day compressive strength of 3000 psi (20.7 MPa) unless otherwise indicated.
   b. Use epoxy-bonding compound as interface between new and existing concrete and piping materials.
4. Protect existing piping, manholes, and structures to prevent concrete or debris from entering while making tap connections. Remove debris or other extraneous material that may accumulate.

E. Connect to sediment interceptors specified in Section "Sanitary Sewer."

F. Pipe couplings, expansion joints, and deflection fittings with pressure ratings at least equal to piping rating may be used in applications below unless otherwise indicated.

1. Use nonpressure-type flexible couplings where required to join gravity-flow, nonpressure sewer piping unless otherwise indicated.
   a. Shielded flexible couplings for same or minor difference OD pipes.
   b. Unshielded, increaser/reducer-pattern, flexible couplings for pipes with different OD.
   c. Ring-type flexible couplings for piping of different sizes where annular space between smaller piping's OD and larger piping's ID permits installation.
2. Use pressure-type pipe couplings for force-main joints.

3.16 CLOSING ABANDONED STORM DRAINAGE SYSTEMS

A. Abandoned Piping: Close open ends of abandoned underground piping indicated to remain in place. Include closures strong enough to withstand hydrostatic and earth pressures that may result after ends of abandoned piping have been closed. Use either procedure below:

1. Close open ends of piping with at least 8-inch- (203-mm-) thick, brick masonry bulkheads.

2. Close open ends of piping with threaded metal caps, plastic plugs, or other acceptable methods suitable for size and type of material being closed. Do not use wood plugs.

B. Abandoned Manholes and Structures: Excavate around manholes and structures as required and use one procedure below:
   1. Remove manhole or structure and close open ends of remaining piping.
   2. Remove and backfill manhole locations as recommended in the geotechnical report and as indicated on the Drawings.
   3. If not indicated in the geotechnical report or on the Drawings, remove top of manhole or structure down to at least 36 inches (915 mm) below final grade. Fill to within 12 inches (300 mm) of top with stone, rubble, or gravel. Fill to top with concrete.

C. Backfill to grade according to Division 31 Section "Earth Moving."

3.17 IDENTIFICATION

A. Materials and their installation are specified in Division 31 Section "Earth Moving." Arrange for installation of green warning tape directly over piping and at outside edge of underground structures.
   1. Use detectable warning tape over all storm drainage piping and over edges of underground structures.

3.18 PROTECTION AND CLEANING

A. The Contractor shall maintain all pipe and chamber installations and drainage structures in a condition such that they will function continuously and shall be kept clean of silt, debris and other deleterious substances until the project has achieved final acceptance.

B. The Contractor shall use all erosion and sediment control measures necessary to assure construction sediments (or other pollutants) do not reach stormwater pipe and/or chamber installations.

3.19 FIELD QUALITY CONTROL

A. Inspect interior of piping to determine whether line displacement or other damage has occurred. Inspect after approximately 24 inches (610 mm) of backfill is in place, and again at completion of Project (See 3.20 Post Installation Inspection).
   1. Submit separate reports for each system inspection.
   2. Defects requiring correction include the following:
      a. Alignment: Less than full diameter of inside of pipe is visible between structures.
      b. Deflection: Flexible piping with deflection exceeding 5%.
      c. Damage: Crushed, broken, cracked, or otherwise damaged piping.
      d. Infiltration: Water leakage into piping.
      e. Exfiltration: Water leakage from or around piping.
   3. Replace defective piping using new materials, and repeat inspections until defects are within allowances specified.
   4. Re-inspect and repeat procedure until results are satisfactory.

B. Test new piping systems, and parts of existing systems that have been altered, extended, or repaired, for leaks and defects.
   1. Do not enclose, cover, or put into service before inspection and approval.
   2. Test completed piping systems according to requirements in Section 3.20.
   3. Schedule tests and inspections by authorities having jurisdiction with at least 24 hours' advance notice.
   4. Submit separate report for each test.
   5. Gravity-Flow Storm Drainage Piping: Test according to requirements of authorities having jurisdiction, UNI-B-6, and the following:
      a. Exception: Piping with soil tight joints unless required by authorities having jurisdiction.
      b. Option: Test plastic piping according to ASTM F 1417.
      c. Option: Test concrete piping according to ASTM C 924 (ASTM C 924M).
   6. Force-Main Storm Drainage Piping: Perform hydrostatic test after thrust blocks, supports, and anchors have hardened. Test at pressure not less than 1-1/2 times the maximum system operating pressure, but not less than 150 psig (1035 kPa).

a. Ductile-Iron Piping: Test according to AWWA C600, "Hydraulic Testing" Section.
b. PVC Piping: Test according to AWWA M23, "Testing and Maintenance" Chapter.

C. Leaks and loss in test pressure constitute defects that must be repaired.

D. Replace leaking piping using new materials, and repeat testing until leakage is within allowances specified.

3.20 POST INSTALLATION INSPECTIONS

A. Upon completion of the work and before final acceptance by the Owner, the entire drainage system shall be subject to a final inspection in the presence of the Owner and/or the Project Engineer. The work shall not be considered complete until all requirements for line, grade, cleanliness, workmanship and final inspections have been completed. Final inspection of the completed pipe installations will be performed after the embankment and/or trench fill is in place and all non-asphalt bases and/or sub-grades have been completed for at least 30 days.

B. Second Final Post Installation Inspection: (If required for the Project) The Owner shall require a second final post installation inspection.
1. Final post installation inspections (if required) shall be conducted no sooner than 2 months before the end of the one year warranty.
2. Final post installation inspections shall utilize a video camera and laser profiler/deflectometer or a video camera and go-no-go Mandrel. Lasers shall be calibrated to the pipe diameter as shown on the construction plans.

C. Initial and final post installation inspections shall be performed and reported, at the Contractor's expense, by a National Association of Sewer Service Companies (NASSCO) Certified Pipe Inspector. Reports of storm pipe assessments shall be submitted to the Project Engineer for review and appraisal.

D. The initial and post installation inspection report shall include: a copy of all video taken (if required), pipe location identification, equipment used for inspection, inspector name, deviation from design grade, deviation from line, deflection of pipe system, inspector notes, condition of joints, condition of pipe wall (e.g. Distress, cracking, wall damage dents, bulges, creases, tears, holes, etc…), ovality and flow capacity.

E. For RCP: seal cracks having a width greater than .010 inches. Repair or replace pipes exhibiting spalls or de-lamination.

F. For CMP and HDPE: initial and post installation inspection deflection shall not exceed 5%; final post installation (warranty) deflection shall not exceed 7%. Replace locations where deflections exceed these requirements; re-rounding of pipe is not allowed.

3.21 CLEANING

A. Clean interior of piping of dirt and superfluous materials. Flush with water**.**

END OF SECTION 334100

This Page Left Intentionally Blank

CONFORMANCE SUBMITTAL
SECTION 334100 – STORM UTILITY DRAINAGE PIPING

Project Location _____
(*City, State*)

General Contractor: _____
(*Company Name, Phone Number*)

_____
(*Address*)

Sub-Contractor: _____
(*Company Name, Phone Number*)

_____
(*Address*)

The following products have been selected (check one box) for use in this project from the list of acceptable products specified:

Concrete Pipe, ASTM C76, Butyl mastic joint sealant ASTM C990-01a for silt-tight designations or rubber gaskets meeting the material and joint configuration requirements of ASTM C443 for watertight designations:
☐ Tongue and Groove RCP, Class _____
☐ Bell and Spigot RCP, Class _____

High Density Polyethylene (HDPE) Pipe, AASHTO M252, M294, Rubber Gasket Joints ASTM F477, silt-tight or watertight designations as specified:
☐ ADS Pipe
☐ Hancor Pipe
☐ Type S Lok-Tite Pipe
☐ Quality Culvert Pipe
☐ DuroMaxx
☐ All underground connections will be made with pre-fabricated HDPE fittings

Polyvinyl Chloride (PVC) Pipe, Rubber Gasket Joints ASTM F477:
☐ PVC Pipe, ASTM D3034, SDR 35
☐ Corrugated PVC Pipe, Contech "A2000"
☐ All underground connections will be made with pre-fabricated PVC fittings

Aluminized Steel Type 2 Corrugated Steel Pipe (CMP), AASHTO M274 or ASTM A929, silt-tight or watertight designations as specified:
☐ Aluminized Steel Type2 Corrugated Steel Pipe

Aluminized Steel Type 2 Spiral Ribbed Pipe (Type IR), AASHTO M274 or ASTM A929 and AASHTO M36 or ASTM A760, silt-tight or watertight designations as specified:
☐ Aluminized Steel Type 2 Spiral Ribbed Pipe (Type IR) such as "Ultra Flo" by Contech or approved equal

Ductile Iron Pipe (DIP), AWWA C151, Fittings AWWA C110, Gaskets AWWA C111:
☐ DIP

Stormwater Collection Chambers ASTM F2418
☐ StormTech
☐ Hancor
☐ CULTEC
☐ StormTech by ADS

Stormwater Detention or Recharge System
☐ Aluminized Steel CMP Detention by CONTECH
☐ 360 Degree Perforated CMP Detention/Recharge by CONTECH
☐ Precast Concrete Detention System

Drainage Boxes (Must be pre-cast unless approved by Owner):
☐ Pre-cast Concrete, per specifications by: ☐DOT #_____, ☐City #_____, ☐Other _____
☐ Cast-in-place Concrete, per specifications by: ☐DOT #_____, ☐City #_____, ☐Other_____
☐ Solid Concrete Brick Masonry, per specifications by: ☐DOT # _____,
☐City #_____, ☐Other _____

Cast Iron Frames, Grates, and Hoods:
Manhole lids, per specifications by: ☐DOT #_____, ☐City #_____, ☐Other_____
Curb Inlets, per specifications by: ☐DOT #_____, ☐City #_____, ☐Other_____
Drop Inlets, per specifications by: ☐DOT #_____, ☐City #_____, ☐Other_____

Detention Pond As-built Survey:
☐ I recognize that an as-built survey of all detention ponds and structures shall be completed prior to project acceptance in accordance with Section 017300 – Field Engineering and Surveying

---

I represent to Owner/City/Engineer that the products selected will be installed in compliance with the applicable codes for the authorities having jurisdiction and in accordance with the contract documents. If noncompliance is discovered the General Contractor shall make or cause to be made all necessary corrections to meet the applicable codes and specifications. Immediately or as directed by Owner the work shall be completed without additional cost to the Owner and / or the contract.

Sub-Contractor: _____
(*Signature of the Authorized Agent of the Sub-Contractor*) Date

_____
(*Print Name of the Authorized Agent of the Sub-Contractor*)

General Contractor: _____
(*Signature of the Authorized Agent of the General Contractor*) Date

_____
(Print Name of the Authorized Agent of the General Contractor)

TRENCH DRAIN CONFORMANCE SUBMITTAL
SECTION 334100 – STORM UTILITY DRAINAGE PIPING

Project Location _____
(*City, State*)

General Contractor: _____
(*Company Name, Phone Number*)

_____
(*Address*)

Sub-Contractor: _____
(*Company Name, Phone Number*)

_____
(*Address*)

Product Verification:

The trench drains installed in this store will meet the product guidelines of Section 334100-2.13 "POLYMER-CONCRETE, CHANNEL DRAINAGE SYSTEMS"

Trench Drain Manufacturer & Model Number: _____

Grate Model Number: _____

Trench Drain Manufacturer & Model Number: _____

Grate Model Number: _____

General Contractor's Affidavit:
I represent to Owner that the product selected will be installed in compliance with the applicable codes for the authorities having jurisdiction and in accordance with the project specification. If noncompliance is discovered the General Contractor shall make or cause to be made all necessary corrections to meet the applicable codes and Owner specifications. The work shall be completed immediately as directed by Owners without additional cost to Owner and/or the contract.

General Contractor: _____
(*Signature of the Authorized Agent of the General Contractor*) (Date)

_____
(*Print Name of the Authorized Agent of the General Contractor*)

Sub-Contractor's Affidavit:
I represent to Owner that the product selected will be installed in compliance with the applicable codes for the authorities having jurisdiction and in accordance with the project specification. If noncompliance is discovered the Sub-Contractor shall make or cause to be made all necessary corrections to meet the applicable codes and owners specifications. The work shall be completed immediately as directed by owner and/or the General Contractor without additional cost to owner and/or the contract.

Sub-Contractor: _____
(*Signature of the Authorized Agent of the Sub-Contractor*) (Date)

_____
(*Print Name of the Authorized Agent of the Sub-Contractor*)

SECTION 210500

COMMON WORK RESULTS FOR FIRE SUPPRESSION

PART 1 GENERAL

1.1 SECTION INCLUDES

A. Pipe, fittings, valves, and connections for sprinkler systems.

1.2 RELATED REQUIREMENTS

A. Section 210553 - Identification for Fire Suppression Piping and Equipment: Piping identification.

B. Section 211300 - Fire-Suppression Sprinkler Systems: Sprinkler systems design.

1.3 REFERENCE STANDARDS

A. ASME (BPV IX) - Boiler and Pressure Vessel Code, Section IX - Welding and Brazing Qualifications; The American Society of Mechanical Engineers; 2007.

B. ASME B16.1 - Gray Iron Pipe Flanges and Flanged Fittings: Classes 25, 125, and 250; The American Society of Mechanical Engineers; 2005.

C. ASME B16.3 - Malleable Iron Threaded Fittings; The American Society of Mechanical Engineers; 1998 (R2006).

D. ASME B16.4 - Gray Iron Threaded Fittings; The American Society of Mechanical Engineers; 1998 (R2006).

E. ASME B16.9 - Factory-made Wrought Steel Buttwelding Fittings; The American Society of Mechanical Engineers; 2007.

F. ASME B16.11 - Forged Steel Fittings, Socket-welding and Threaded; The American Society of Mechanical Engineers; 2009.

G. ASTM A 47/A 47M - Standard Specification for Ferritic Malleable Iron Castings; 1999 (Reapproved 2009).

H. ASTM A 53/A 53M - Standard Specification for Pipe, Steel, Black and Hot-Dipped, Zinc-Coated, Welded and Seamless; 2007.

I. ASTM A 795/A 795M - Standard Specification for Black and Hot-Dipped Zinc-Coated (Galvanized) Welded and Seamless Steel Pipe for Fire Protection Use; 2008.

J. NFPA 13 - Standard for the Installation of Sprinkler Systems; National Fire Protection Association; 2010.

K. NFPA 14 - Standard for the Installation of Standpipe and Hose Systems; National Fire Protection Association; 2010.

L. UL (FPED) - Fire Protection Equipment Directory; Underwriters Laboratories Inc.; current edition.

M. UL 262 - Gate Valves for Fire-Protection Service; Underwriters Laboratories Inc.; Current Edition, Including All Revisions.

N. UL 312 - Check Valves for Fire-Protection Service; Underwriters Laboratories Inc.; Current Edition, Including All Revisions.

1.4 SUBMITTALS

A. Product Data: Provide manufacturers catalogue information. Indicate valve data and ratings.

B. Shop Drawings: Indicate pipe materials used, jointing methods, supports, floor and wall penetration seals. Indicate installation, layout, weights, mounting and support details, and piping connections.

C. Project Record Documents: Record actual locations of components and tag numbering.

D. Operation and Maintenance Data: Include installation instructions and spare parts lists.

1.5 QUALITY ASSURANCE

A. Manufacturer Qualifications: Company specializing in manufacturing the Products specified in this section with minimum three years documented experience.

B. Installer Qualifications: Company specializing in performing the work of this section with minimum three years documented experience, approved by manufacturer.

C. Welders certification: In accordance with ASME (BPV IX).

D. Conform to UL, FM, requirements.

E. Valves: Bear UL, FM, label or marking. Provide manufacturer's name and pressure rating marked on valve body.

F. Products Requiring Electrical Connection: Listed and classified as suitable for the purpose specified and indicated.

1.6 DELIVERY, STORAGE, AND HANDLING

A. Deliver and store valves in shipping containers, with labeling in place.

B. Provide temporary protective coating on cast iron and steel valves. Provide temporary end caps and closures on piping and fittings. Maintain in place until installation.

PART 2 PRODUCTS

2.1 FIRE PROTECTION SYSTEMS

A. Sprinkler Systems: Conform work to NFPA 13 International Fire Code, International Building Code and specifications.

B. Welding Materials and Procedures: Conform to ASME Code.

2.2 ABOVE GROUND PIPING

A. Steel Pipe: ASTM A 795 Schedule 10, or ASTM A 53 Schedule 40, black or galvanized. Allied Dyna-Thread and Dyna-Flow or similar piping may be used in lieu of Schedule 40 and Schedule 10. All threadable pipe shall have a Corrosion Resistance Ratio (CRR) of 1.00 at threads. Allied BLT, XL or similar type pipe is prohibited.
   1. Steel Fittings: ASME B16.9, wrought steel, buttwelded.
   2. Cast Iron Fittings: ASME B16.1, flanges and flanged fittings and ASME B16.4, threaded fittings.
   3. Malleable Iron Fittings: ASME B16.3, threaded fittings.
   4. Mechanical Grooved Couplings: Malleable iron housing clamps to engage and lock, "C" shaped elastomeric sealing gasket, steel bolts, nuts, and washers; galvanized for galvanized pipe.

2.3 PIPE HANGERS AND SUPPORTS

A. Hangers for Pipe Sizes 1 to 4 inch: Malleable iron, adjustable swivel, split ring.

B. Hangers for Pipe Sizes 6 inches and Over: Carbon steel, adjustable, clevis.

C. Multiple or Trapeze Hangers: Steel Unistrut channels or equal with clamps and hanger rods.

D. Wall Support for Pipe Sizes to 3 inches: Cast iron hook.

E. Wall Support for Pipe Sizes 4 inches and Over: Welded steel bracket and wrought steel clamp.

F. Vertical Support: Steel riser clamp.

G. Floor Support: Cast iron adjustable pipe saddle, lock nut, nipple, floor flange, and concrete pier or steel support.

2.4 GATE VALVES

A. Up to and including 2 inches:
   1. Bronze body, bronze trim, rising stem, handwheel, solid wedge or disc, threaded ends.

B. Over 2 inches:
   1. Iron body, bronze trim, rising stem pre-grooved for mounting tamper switch, handwheel, OS&Y, solid rubber covered bronze or cast iron wedge, flanged ends.

2.5 GLOBE OR ANGLE VALVES

A. Up to and including 2 inches:
   1. Bronze body, bronze trim, rising stem and handwheel, inside screw, renewable rubber disc, threaded ends, with backseating capacity repackable under pressure.

B. Over 2 inches:
   1. Iron body, bronze trim, rising stem, handwheel, OS&Y, plug-type disc, flanged ends, renewable seat and disc.

2.6 BALL VALVES

A. Up to and including 2 inches:
   1. Bronze two piece body, brass, chrome plated bronze, or stainless steel ball, teflon seats and stuffing box ring, lever handle and balancing stops, threaded ends with union.

B. Over 2 inches:
   1. Cast steel body, chrome plated steel ball, teflon seat and stuffing box seals, lever handle or gear drive handwheel for sizes 10 inches and over, flanged.

2.7 CHECK VALVES

A. Up to and including 2 inches:
   1. Bronze body and swing disc, rubber seat, threaded ends.

B. Over 2 inches:
   1. Iron body, bronze trim, swing check with rubber disc, renewable disc and seat, flanged ends with automatic ball check.

C. 4 inches and Over:
   1. Iron body, bronze disc, stainless steel spring, resilient seal, threaded, wafer, or flanged ends.

2.8 DRAIN VALVES

A. Ball Valve:
   1. Brass with cap and chain, 3/4 inch hose thread.

2.9 BUTTERFLY VALVES

A. Bronze Body:
   1. Stainless steel disc, resilient replaceable seat, threaded or grooved ends, extended neck, handwheel and gear drive and integral indicating device, and built-in tamper proof switch rated 10 amps at 115 volt AC.

B. Cast or Ductile Iron Body:
   1. Cast or ductile iron, chrome or nickel plated ductile iron or aluminum bronze disc, resilient replaceable EPDM seat, wafer, lug, or grooved ends, extended neck, handwheel and gear drive and integral indicating device , and internal tamper switch rated 10 amp at 115 volt AC.

2.10 SUPERVISORY/TAMPER SWITCHES

A. For O S & Y valve or butterfly valve installations, UL/FM listed/approved, to monitor position of valve, tamper resistant cover screws, single or double SPDT switch contacts, corrosion resistant, for indoor or outdoor use, NEMA 4 & 6P enclosures.

PART 3 EXECUTION

3.1 PREPARATION

A. Ream pipe and tube ends. Remove burrs. Bevel plain end ferrous pipe.

B. Remove scale and foreign material, from inside and outside, before assembly.

3.2 INSTALLATION

A. Install sprinkler system and service main piping, hangers, and supports in accordance with NFPA 13.

B. Route piping in orderly manner, plumb and parallel to building structure. Maintain gradient.

C. Install piping to conserve building space, to not interfere with use of space and other work.

D. Group piping whenever practical at common elevations.

E. Sleeve pipes passing through partitions, walls, and floors.

F. Install piping to allow for expansion and contraction without stressing pipe, joints, or connected equipment.

G. Installation shall be compliant with International Building Code (IBC) and NFPA requirements.

H. Pipe Hangers and Supports:
   1. Install hangers to provide minimum 1/2 inch space between finished covering and adjacent work.
   2. Place hangers within 12 inches of each horizontal elbow.
   3. Use hangers with 1-1/2 inch minimum vertical adjustment. Design hangers for pipe movement without disengagement of supported pipe.
   4. Support vertical piping at every other floor. Support riser piping independently of connected horizontal piping.
   5. Where several pipes can be installed in parallel and at same elevation, provide multiple or trapeze hangers.

I. Slope piping and arrange systems to drain at low points. Use eccentric reducers to maintain top of pipe level.

J. Prepare pipe, fittings, supports, and accessories for finish painting. Where pipe support members are welded to structural building framing, scrape, brush clean, and apply one coat of zinc rich primer to welding.

K. Do not penetrate building structural members unless indicated.

L. Provide sleeves when penetrating footings, floors, ceilings and walls. Seal pipe and sleeve penetrations to achieve fire resistance equivalent to fire separation required.

M. When installing more than one piping system material, ensure system components are compatible and joined to ensure the integrity of the system. Provide necessary joining fittings. Ensure flanges, union, and couplings for servicing are consistently provided.

N. Install valves with stems upright or horizontal, not inverted. Remove protective coatings prior to installation.

O. Provide gate or ball valves for shut-off or isolating service.

P. Provide drain valves at main shut-off valves, low points of piping and apparatus.

3.3 OWNER TRAINING

A. Contractor to provide factory authorized representative and/or field personnel knowledgeable with the operations, maintenance and troubleshooting of the system and/or components defined within this section for a minimum period of 1 hour.

END OF SECTION

INTENTIONALLY LEFT BLANK

SECTION 210553

IDENTIFICATION FOR FIRE SUPPRESSION PIPING AND EQUIPMENT

PART 1 GENERAL

1.1 SECTION INCLUDES

A. Nameplates.

B. Tags.

C. Pipe Markers.

1.2 REFERENCE STANDARDS

A. ASME A13.1 - Scheme for the Identification of Piping Systems; The American Society of Mechanical Engineers; 2007.

1.3 SUBMITTALS

A. List: Submit list of wording, symbols, letter size, and color coding for mechanical identification.

B. Chart and Schedule: Submit valve chart and schedule, including valve tag number, location, function, and valve manufacturer's name and model number.

C. Manufacturer's Installation Instructions: Indicate special procedures, and installation.

D. Project Record Documents: Record actual locations of tagged valves.

PART 2 PRODUCTS

2.1 IDENTIFICATION APPLICATIONS

A. Major Control Components: Nameplates.

B. Piping: Tags or Pipemarkers.

C. Pumps: Nameplates.

D. Relays: Tags.

E. Small-sized Equipment: Tags.

F. Valves: Tags or Nameplates

2.2 MANUFACTURERS

A. Kolbi Pipe Marker Co.: www.kolbipipemarkers.com.

B. Seton Identification Products: www.seton.com.

C. Brady Corporation: www.bradycorp.com.

2.3 NAMEPLATES

A. Description: Laminated three-layer plastic with engraved letters.
   1. Letter Color: Black.
   2. Letter Height: 1/4 inch.
   3. Background Color: White.

2.4 TAGS

A. Plastic Tags: Laminated three-layer plastic with engraved black letters on light contrasting background color. Tag size minimum 1-1/2 inch diameter.

B. Metal Tags: Brass with stamped letters; tag size minimum 1-1/2 inch diameter with smooth edges.

C. Valve Tag Chart: Typewritten letter size list in anodized aluminum frame.

2.5 PIPE MARKERS

A. Color: Conform to ASME A13.1.

B. Plastic Pipe Markers: Factory fabricated, flexible, semi- rigid plastic, preformed to fit around pipe or pipe covering; minimum information indicating flow direction arrow and identification of fluid being conveyed.

C. Plastic Tape Pipe Markers: Flexible, vinyl film tape with pressure sensitive adhesive backing and printed markings.

PART 3 EXECUTION

3.1 PREPARATION

A. Degrease and clean surfaces to receive adhesive for identification materials.

3.2 INSTALLATION

A. Install nameplates with corrosive-resistant mechanical fasteners, or adhesive. Apply with sufficient adhesive to ensure permanent adhesion and seal with clear lacquer.

B. Install tags with corrosion resistant chain.

C. Install plastic pipe markers in accordance with manufacturer's instructions.

D. Install plastic tape pipe markers complete around pipe in accordance with manufacturer's instructions.

E. Identify valves in main and branch piping with tags.

F. Identify pumps with plastic nameplates. Small devices, such as in-line pumps may be identified with tags.

G. Identify piping, concealed or exposed with plastic pipe markers. Use tags on piping 3/4 inch diameter and smaller.
   1. Identify service, flow direction, and pressure.
   2. Install in clear view and align with axis of piping.
   3. Locate identification not to exceed 20 feet on straight runs including risers and drops, adjacent to each valve and Tee, at each side of penetration of structure or enclosure, and at each obstruction.

END OF SECTION

SECTION 211300

FIRE SUPPRESSION SPRINKLERS

PART 1 GENERAL

1.1 SECTION INCLUDES

A. Wet-pipe sprinkler system.

B. System design, installation, and certification.

1.2 RELATED REQUIREMENTS

A. Section 210500 - Common Work Results for Fire Suppression: Pipe, fittings, and valves.

B. Section 210553 - Identification for Fire Suppression Piping and Equipment.

C. Section 220553 - Identification for Plumbing Piping and Equipment.

D. Section 262702 - Equipment Wiring Systems: Electrical characteristics and wiring connections.

E. Section 283100 - Fire System.

1.3 REFERENCE STANDARDS

A. FM P7825 - Approval Guide; Factory Mutual Research Corporation; current edition.

B. NFPA 13 - Standard for the Installation of Sprinkler Systems; National Fire Protection Association; 2010.

C. UL (FPED) - Fire Protection Equipment Directory; Underwriters Laboratories Inc.; current edition.

1.4 ADMINISTRATIVE REQUIREMENTS

A. Pre-installation Meeting: Convene two weeks before starting work of this section.

1.5 SUBMITTALS

A. Product Data: Provide data on sprinklers, valves, and specialties, including manufacturers catalog information. Submit performance ratings, rough-in details, weights, support requirements, and piping connections.

B. Shop Drawings:
   1. Submit working plans indicating sprinkler head locations coordinated with ceiling installation, pipe routing, fire department connections and riser locations.
   2. Indicate hydraulic calculations, detailed pipe layout, hangers and supports, sprinklers, components and accessories. Indicate system controls.
   3. Submit shop drawings to authority having jurisdiction for approval. Submit proof of approval to Engineer.

C. Project Record Documents: Record actual locations of sprinklers and deviations of piping from drawings. Indicate drain and test locations.

D. Manufacturer's Certificate: Certify that system has been tested and meets or exceeds specified requirements and code requirements.

E. Operation and Maintenance Data: Include components of system, servicing requirements, record drawings, inspection data, replacement part numbers and availability, and location and numbers of service depot.

F. Maintenance Materials: Furnish the following for Owner's use in maintenance of project.
   1. Extra Sprinklers: Type and size matching those installed, in quantity required by referenced NFPA design and installation standard.
   2. Sprinkler Wrenches: For each sprinkler type.

1.6 QUALITY ASSURANCE

A. Maintain one copy of referenced design and installation standard on site.

B. Conform to UL FM requirements.

C. Designer Qualifications: Design system under direct supervision of a NICET Level III, experienced in design of this type of work.

D. Manufacturer Qualifications: Company specializing in manufacturing the Products specified in this section with minimum three years documented experience.

E. Installer Qualifications: Company specializing in performing the work of this section with minimum three years documented experience approved by manufacturer.

F. Equipment and Components: Provide products that bear UL and FM label or marking.

G. Products Requiring Electrical Connection: Listed and classified by Underwriters Laboratories Inc., as suitable for the purpose specified and indicated.

1.7 DELIVERY, STORAGE, AND HANDLING

A. Store products in shipping containers and maintain in place until installation. Provide temporary inlet and outlet caps. Maintain caps in place until installation.

PART 2 PRODUCTS

2.1 MANUFACTURERS

A. Sprinklers, Valves, and Equipment:
   1. Tyco Fire Suppression & Building Products: www.tyco-fire.com.
   2. Viking Corporation: www.vikinggroupinc.com.
   3. Reliable Automatic Sprinkler Co.: www.reliable-sprinkler.com.

2.2 SPRINKLER SYSTEM

A. Sprinkler System: Fire protection contractor shall provide design build services based on the requirements herein specified. System shall provide coverage for building addition as noted on plans.

B. System Piping Location: Wet system piping shall be installed at highest elevation possible. Piping shall be installed above all mechanical equipment, ductwork, and all plumbing system piping. Fire protection contractor shall coordinate fire protection piping prior to installation.

C. Occupancy: Shall comply with NFPA 13. See plans for occupancy areas.

D. Water Supply: Provided by city water main – Moore, Oklahoma.
   1. Coordinate with owner and fire department for connection of new zone to existing sprinkler riser assembly. Field verify location for connection points. Conduct hydraulic calculations for proper connection points.
   2. Contractor shall determine volume and pressure from water flow test data.

E. Interface system with building control system and fire alarm system.

F. Storage Cabinet for Spare Sprinklers and Tools: Steel, located adjacent to fire sprinkler riser.

G. Fire department connection - existing.

2.3 SPRINKLERS

A. Suspended Ceiling Type: Semi-recessed pendant type with matching push on escutcheon plate.
   1. Response Type: Quick.
   2. Coverage Type: Standard.
   3. Finish: Enamel, color white.
   4. Escutcheon Plate Finish: Enamel, color white.

5. Fusible Link: Glass bulb type temperature rated for specific area hazard.

B. Exposed Area Type: Standard upright type. Provide head guards in areas where sprinkler heads are subject to damage.
   1. Response Type: Quick.
   2. Coverage Type: Standard.
   3. Finish: Brass. Chrome plated.
   4. Fusible Link: Glass bulb type temperature rated for specific area hazard.

C. Sidewall Type: Semi-recessed horizontal sidewall type with matching push on escutcheon plate.
   1. Response Type: Quick.
   2. Coverage Type: Standard.
   3. Finish: Chrome plated.
   4. Escutcheon Plate Finish: Chrome plated.
   5. Fusible Link: Glass bulb type temperature rated for specific area hazard.

2.4 PIPING SPECIALTIES

A. Provide proper backflow protection to fire protection system as required per Authority Having Jurisdiction.

B. Flexible Sprinkler Drop Fittings: Corrugated Type 304 stainless steel hose with braided Type 304 stainless steel exterior cover, welded stainless steel or zinc plated steel inlet and outlet threaded fittings with EPDM seals. 175 PSI pressure rating. 225 ˚F temperature rating, 1" minimum internal hose diameter. 60" maximum hose length, straight or angle outlet configuration. Galvanized steel ceiling support bar and brackets selected to match project ceiling support system requirements. UL Listed and FM approved.

C. Water Flow Switch: Vane type switch for mounting horizontal or vertical, with two contacts; rated 10 amp at 120 volt AC and 2.5 amp at 24 volt DC.

D. Fire Department Inspectors Test outlet: coordinate location and type with AHJ or Local Fire Marshall:
   1. Label: "Inspectors Test".

E. Supervisory and Tamper Switches: For O S & Y valve or butterfly valve installations, UL/FM listed/approved, to monitor position of valve, tamper resistant cover screws, single or double SPDT switch contacts, corrosion resistant, for indoor or outdoor use, NEMA 4 & 6P enclosures.

PART 3 EXECUTION

3.1 INSTALLATION

A. Install in accordance with referenced NFPA design and installation standard.

B. Install equipment in accordance with manufacturer's instructions.

C. Place pipe runs to minimize obstruction to other work.

D. Place piping in concealed spaces above finished ceilings.

E. Center sprinklers in one direction only in ceiling tile with location in other direction variable, dependent upon spacing and coordination with ceiling elements and provide piping offsets as required.

F. Flexible sprinkler drop fittings: Install in accordance with manufacturer's installation instructions following minimum bend radii, maximum number of bends and bend distance from end requirements.

G. Apply masking tape or paper cover to ensure concealed sprinklers, cover plates, and sprinkler escutcheons do not receive field paint finish. Remove after painting. Replace painted sprinklers.

H. Flush entire piping system of foreign matter.

I. Install guards on sprinklers where indicated.

J. Hydrostatically test entire system.

K. Require test be witnessed by Fire Marshal and authority having jurisdiction.

L. Provide flow controls and alarms at sprinkler system water source connection.

3.2 INTERFACE WITH OTHER PRODUCTS

A. Ensure required devices are installed and connected as required to fire alarm system and building controls system.

3.3 OWNER TRAINING

A. Contractor to provide factory authorized representative and/or field personnel knowledgeable with the operations, maintenance and troubleshooting of the system and/or components defined within this section for a minimum period of 1 hour.

END OF SECTION

SECTION 220500

COMMON WORK RESULTS FOR PLUMBING

PART 1 GENERAL

1.1 SCOPE

A. This section includes information common to two or more technical plumbing specification sections or items that are of a general nature, not conveniently fitting into other technical sections. Included are the following topics:
   1. PART 1 – GENERAL.
      a. Scope.
      b. Reference.
      c. Standards.
      d. Quality Assurance.
      e. Sleeves and Openings.
      f. Sealing and Firestopping.
      g. Equipment Furnished By Others.
      h. Provisions for Future.
      i. Off Site Storage.
      j. Codes.
      k. Certificates and Inspections.
      l. Submittals.
      m. Operating and Maintenance Data.
      n. Training of Owner Personnel.
      o. Record Drawings.
   2. PART 2 – PRODUCTS.
      a. Access Panels and Doors.
      b. Sealing and Firestopping.
   3. PART 3 – EXECUTION.
      a. Excavation and Backfill.
      b. Sheeting, Shoring and Bracing.
      c. Dewatering.
      d. Rock Excavation.
      e. Concrete Work.
      f. Building Access.
      g. Equipment Access.
      h. Coordination.
      i. Lubrication.
      j. Sleeves.
      k. Sealing and Firestopping.

1.2 REFERENCE

A. This section applies to all Division 22 sections of plumbing.

1.3 STANDARDS

A. Abbreviations of standards organizations referenced in this and other sections are as follows:

1.	ACPA	American Concrete Pipe Association.
2.	AGA	American Gas Association.
3.	ANSI	American National Standards Institute.
4.	ASME	American Society of Mechanical Engineers.
5.	ASPE	American society of Plumbing Engineers.
6.	ASSE	American Society of Sanitary Engineering.
7.	ASTM	American Society for Testing and Materials.
8.	AWWA	American Water Works Association.

9.	AWS	American Welding Society.
10.	CISPI	Cast Iron Soil Pipe Institute.
11.	CGA	Compressed Gas Association.
12.	EPA	Environmental Protection Agency.
13.	IAPMO	International Association of Plumbing & Mechanical Officials.
14.	MCA	Mechanical Contractors Association.
15.	MSS	Manufacturer's Standardization Society of the Valve & Fitting Industry, Inc.
16.	NBS	National Bureau of Standards.
17.	NEC	National Electric Code.
18.	NFPA	National Fire Protection Association.
19.	NSF	National Sanitation Foundation.
20.	PDI	Plumbing and Drainage Institute.
21.	SMACNA	Sheet Metal and Air Conditioning Contractors' National Association. Inc.
22.	STI	Steel Tank Institute.
23.	UL	Underwriters Laboratories Inc.

B. Standards referenced in this section:

1.	ACI 614	Recommended Practice for Measuring, Mixing and Placing of Concrete.
2.	ASTM D1557	Standard Test Method for Moisture-Density Relations of Soils.
3.	ASTM E814	Standard Test Method for Fire Tests of Through-Penetration Fire Stops.
4.	ASTM E84	Standard Test Method for Surface Burning Characteristics of Building Materials.
5.	D.O.T.	Standard Specifications for Road and Bridge Construction, State of Oklahoma Dept. of Transportation.
6.	UL1479	Fire Tests of Through-Penetration Firestops.
7.	UL723	Surface Burning Characteristics of Building Materials.

1.4 QUALITY ASSURANCE

A. All products and materials used are to be new, undamaged, clean and in good condition. Existing products and materials are not to be reused unless specifically indicated.

B. Substitution of Materials: Refer to applicable sections in Bidding Requirements and Division 1 - General Requirements.

C. Where equipment or accessories are used which differ in arrangement, configuration, dimensions, ratings, or engineering parameters from those indicated on the contract documents, the Contractor is responsible for all costs involved in integrating the equipment or accessories into the system and for obtaining the intended performance from the system into which these items are placed.

1.5 SEALING AND FIRESTOPPING

A. Sealing and firestopping of sleeves/openings between piping, etc. and the sleeve or structural opening shall be the responsibility of the Contractor whose work penetrates the opening. The Contractor responsible shall hire individuals skilled in such work to do the sealing and fireproofing. These individuals hired shall normally and routinely be employed in the sealing and fireproofing occupation.

1.6 EQUIPMENT FURNISHED BY OTHERS

A. Coordinate with owner for location of kitchen equipment. Contractor shall rough-in and make final connections to equipment furnished by others. See Plumbing plans.

1.7 PROVISIONS FOR FUTURE

A. Coordinate with owner for final location of valves for future building additions. See Plumbing plans.

1.8 OFF SITE STORAGE

A. Prior approval by Owner and the Engineer will be needed. The Contractor shall submit Storage Agreement Form to Owner for consideration of offsite materials storage. Generally, sleeves, pipe/pipe fittings and similar rough-in material will not be accepted for offsite storage. No material will be accepted for offsite storage unless shop drawings for the material have been approved.

1.9 CODES

A. Comply with requirements of Oklahoma Code Requirements.

1.10 CERTIFICATES AND INSPECTIONS

A. Obtain and pay for all required State installation inspections except those provided by the Engineer in accordance with Oklahoma Code Requirements. Deliver originals of these certificates to the Owner's Project Representative. Include copies of the certificates in the Operating and Maintenance Instructions.

1.11 SUBMITTALS

A. Refer to Division 1, for submittal procedures.

B. Not more than two weeks after award of contract but before any shop drawings are submitted, Contractor to submit the following plumbing system data sheet. List piping material type for each piping service on the project, ASTM number, schedule or pressure class, joint type, manufacturer and model number where appropriate. List valves and specialties for each piping service, fixture and equipment with manufacturer and model number. The approved plumbing system data sheet(s) will be made available to the Owner's Project Representative for their use on this project.

PLUMBING SYSTEM DATA SHEET

Item	Pipe Service/Sizes	Manufacturer/Model No.	Remarks
Pipe.			
Hangers & Supports.			
Insulation.			
Plumbing Specialties.			
Plumbing Fixtures.			
Plumbing Equipment.			

C. Shop drawing submittals shall be individually submitted by specification section number in PDF format. Combined submittals will be returned for contractor to divide.

D. Shop drawing submittals are to be bound, labeled, contain the project manual cover page and a material index list page showing item designation, manufacturer and additional items supplied with the installation. Submit for all equipment and systems as indicated in the respective specification sections, marking each submittal with that specification section number. Mark general catalog sheets and drawings to indicate specific items being submitted and proper identification of equipment by name and/or number, as indicated in the contract documents. Include wiring diagrams of electrically powered equipment.

1. Submit sufficient quantities of data sheets and shop drawings to allow the following distribution:
    a. Operating and Maintenance Manuals 2 copies.
    b. Owner 2 copies.
    c. Architect/Engineer 1 copy.
    d. Owner Field Office 1 copy.

1.12 OPERATION AND MAINTENANCE DATA

A. All operations and maintenance data shall comply with the submission and content requirements specified under applicable sections in Bidding Requirements and Division 1 - General Requirements.

B. In addition to the general content specified under applicable sections in Bidding Requirements and Division 1 - General Requirements, supply the following additional documentation:
   1. Records of tests performed to certify compliance with system requirements.
   2. Manufacturer's wiring diagrams for electrically powered equipment.
   3. Certificates of inspection by regulatory agencies.
   4. Valve schedules.
   5. Lubrication instructions, including list/frequency of lubrication.
   6. Parts lists for fixtures, equipment, valves and specialties.
   7. Manufacturer’s installation, operation and maintenance recommendations for fixtures, equipment, valves and specialties.
   8. Additional information as indicated in the technical specification sections.

1.13 TRAINING OF OWNER PERSONNEL

A. Instruct Owner’s personnel in the proper operation and maintenance of systems and equipment provided as part of this project. Include not less than six (6) hours of instruction, using the Operating and Maintenance manuals during this instruction. Demonstrate startup, operation and shutdown procedures for all equipment. All training to be during normal working hours. Videotape all instructions and provide Owner with copy.

1.14 RECORD DRAWINGS

A. Refer to applicable sections in Bidding Requirements and Division 1 - General Requirements.

PART 2 PRODUCTS

2.1 ACCESS PANELS AND DOORS

A. Concrete Walls:
   1. 16 gauge frame with not less than a 20 gauge hinged door panel, prime coated steel for general applications, stainless steel for use in toilets, showers, and similar wet areas, concealed hinges, screwdriver operated cam latch for general applications, key lock for use in public or secured areas, UL listed for use in fire rated partitions if required by the application. Use the largest size access opening possible, consistent with the space and the item needing service; minimum size is 12" by 12".

2.2 SEALING AND FIRESTOPPING

A. FIRE AND/OR SMOKE RATED PENETRATIONS:
   1. Manufacturers:
      a. 3M: www.3m.com.
      b. Hilti: www.hilti.com.
      c. Rectorseal: www.rectorseal.com.
      d. STI/SpecSeal: www.stifirestop.com.
      e. Tremco: www.tremcosealants.com.
   2. All firestopping systems shall be provided by the same manufacturer.
   3. Fire stop systems shall be UL listed or tested by an independent testing laboratory approved by the Department of Commerce.
   4. Submittals: Contractor shall submit product data for each firestop system. Submittals shall include product characteristics, performance and limitation criteria, test data, MSDS sheets, installation details and procedures for each method of installation applicable to this project. For non-standard conditions where no UL tested system exists, submit manufacturer's drawings for UL system with known performance for which an engineering judgment can be based upon.

5. Use a product that has a rating not less than the rating of the wall or floor being penetrated. Reference architectural drawings for identification of fire and/or smoke rated walls and floors.
6. Use firestop putty, caulk sealant, intumescent wrapstrips, intumescent firestop collars, firestop blocks, firestop mortar or a combination of these products to provide a UL listed system for each application required for this project. Provide mineral wool backing where specified in manufacturer's application detail.

B. NON-RATED PENETRATIONS:
1. In exterior wall openings below grade, use a modular mechanical type seal consisting of interlocking synthetic rubber links shaped to continuously fill the annular space between the uninsulated pipe and the cored opening or a water-stop type wall sleeve. The operating bolts of the mechanical type seal shall be accessible from the interior of the building.
2. At pipe penetrations of non-rated interior partitions, floors and exterior walls, use urethane caulk in annular space between pipe insulation and sleeve. For non-rated drywall, plaster or wood partitions where sleeve is not required use urethane caulk in annular space between pipe insulation and wall material.

PART 3 EXECUTION

3.1 EXCAVATION AND BACKFILL

A. Perform all excavation and backfill work necessary to accomplish indicated plumbing systems installation. Excavate to bottom of pipe and structure bedding, 4" in stable soils, 6" in rock or wet trenches and 8" in unstable soil. Finish bottoms of excavations to true, level surface.

B. Bedding up to a point 12" inches above the top of the pipe shall be thoroughly compacted sand. Backfill above the bedding shall be thoroughly compacted excavated material free of construction debris, large stones, organic, perishable, and frozen materials. Refer to IPC section 306 – Trenching, Excavation and Backfill.

C. Take care during bedding, compaction and backfill not to disturb or damage piping.

D. Mechanically compact bedding and backfill to prevent settlement. The initial compacted lift to not exceed 24" compacted to 95% density per Modified Proctor Test (ASTM D-1557). Subsequent lifts under pavements, curbs, walks and structures are not to exceed 12" and be compacted to 95% density per Modified Proctor Test. In all other areas where construction above the excavation is not anticipated within 2 years, mechanically compact backfill in lifts not exceeding 24" to 90% density per Modified Proctor Test. Route the equipment over each lift of the material so that the compaction equipment contacts all areas of the surface of the lift.

E. Strip topsoil from area to be excavated, free from subsoil and debris, and store for later respreading.

F. At no time place excavated materials where they will impede surface drainage unless such drainage is being safely rerouted away from the excavation.

G. Excavate whatever materials are encountered as required to place at the elevations shown, all pipe, manholes, and other work. Remove debris and rubbish from excavations before placing bedding and backfill material.

H. Remove surplus excavated materials from site.

I. Verify the locations of any water, drainage, gas, sewer, electric, telephone or steam lines which may be encountered in the excavation. Underpin and support all lines. Cut off service connections encountered which are to be removed at the limits of the excavation and cap.

J. Provide and maintain all fencing, barricades, signs, warning lights, and/or other equipment necessary to keep all excavation pits and trenches and the entire subgrade area safe under all circumstances and at all times. No excavation shall be left unattended without adequate protection.

K. Elevations shown on the plans are subject to such revisions as may be necessary to fit field conditions. No adjustment in compensation will be made for adjustments up to two (2) feet above or below the grades indicated on the plans.

L. Install lines passing under foundations with minimum of 1-1/2 inch clearance to concrete and ensure there is no disturbance of bearing soil.

3.2 SHEETING, SHORING AND BRACING

A. Provide shoring, sheet piling and bracing in conformance with the Oklahoma Code Requirements to prevent earth from caving or washing into the excavation. Shore and underpin to properly support adjacent or adjoining structures. Abandon in place shoring, sheet piling and underpinning below the top of the pipe, or, if approved in advance by the engineer, maintained in place until other permanent support approved by the engineer is provided.

3.3 DEWATERING

A. Provide, operate and maintain all pumps and other equipment necessary to drain and keep all excavation pits, trenches and the entire subgrade area free from water under all circumstances. Obtain general permit from the Oklahoma Department of Natural Resources district office for discharge of construction dewatering effluent. Comply with permit requirements.

3.4 ROCK EXCAVATION

A. Remove rock encountered in the excavation to a minimum dimension of six (6) inches outside the pipe. Rock excavation includes all hard, solid rock in ledges, bedded deposits and unstratified masses, all natural conglomerate deposits so firmly cemented as to present all the characteristics of solid rock; which material is so hard or so firmly cemented that in the opinion of the Engineer it is not practical to excavate and remove same with a power shovel except after thorough and continuous drilling and blasting. Rock excavation includes rock boulders of 1/2 cubic yard or more in volume.

B. Rock excavation will be computed on the basis of the depth of rock removed and a trench width two (2) feet larger than the outside diameter of the pipe where one (1) pipe is laid in the trench and three (3) feet larger than the combined outside diameter where two (2) pipes are laid in the trench. Include 6" pipe and structure bedding in rock excavation. Include rock excavation shown on the plans in the Base Bid.

3.5 CONCRETE WORK

A. Cast-in-place concrete within the building will be performed by the Division 3 Contractor unless otherwise noted. Provide all layout drawings, anchor bolts, metal shapes, and/or templates required to be cast into concrete or used to form concrete for support or installation of plumbing piping, fixtures, specialties and equipment. Coordinate locations of equipment, pipe penetrations in wet areas, etc. with the Division 3 Contractor.

3.6 BUILDING ACCESS

A. Arrange for the necessary openings in the building to allow for admittance or removal of all apparatus. When the building access was not previously arranged and must be provided by this Contractor, restore any opening to its original condition after the apparatus has been brought into the building.

3.7 EQUIPMENT ACCESS

A. Install all piping, conduit and accessories to permit access to equipment for maintenance and service. Coordinate the exact location of wall and ceiling access panels and doors with the General Contractor, making sure that access is available for all equipment and specialties. Access doors in general construction are to be furnished by the Plumbing Contractor and installed by the General Contractor.

B. Provide color coded thumb tacks or screws, depending on the surface, for use in accessible ceilings which do not require access panels.

3.8 COORDINATION

A. Coordinate all work with other Contractors prior to installation. Any work that is not coordinated and that interferes with other Contractor's work shall be removed or relocated at the installing Contractor's expense.

B. Verify that all devices are compatible for the type of construction and surfaces on which they will be used.

3.9 LUBRICATION

A. Lubricate all bearings with lubricant as recommended by the manufacturer before the equipment is operated for any reason. Once the equipment has been run, maintain lubrication in accordance with the manufacturer's instructions until the work is accepted by the Owner. Maintain a log of all lubricants used and frequency of lubrication; include this information in the Operating and Maintenance Manuals at the completion of the project.

3.10 SLEEVES

A. Provide galvanized sheet metal sleeves for pipe penetrations through interior and exterior walls to provide a backing for sealant or firestopping. Patch wall around sleeve to match adjacent wall construction and finish. Grout area around sleeve in masonry construction. In finished spaces where pipe penetration through wall is exposed to view, sheet metal sleeve shall be installed flush with face of wall. In existing poured concrete walls where penetration is core drilled, pipe sleeve is not required.

B. Pipe sleeves are not required in interior non-rated drywall, plaster or wood partitions and sleeves are not required in existing poured concrete walls where penetrations are core drilled.

C. Pipe sleeves in new poured concrete construction shall be schedule 40 steel pipe (sized to allow insulated pipe to run through sleeve), cast in place.

D. In all piping floor penetrations, fire rated and non-fire rated, top of sleeve shall extend 2 inch above the adjacent finished floor. In existing floor penetrations, core drill sleeve opening large enough to insert schedule 40 sleeve and grout area around sleeve with hydraulic setting, non-shrink grout. If the pipe penetrating the sleeve is supported by a pipe clamp resting on the sleeve, weld a collar or struts to the sleeve that will transfer weight to existing floor structure.

3.11 SEALING AND FIRESTOPPING

A. FIRE AND/OR SMOKE RATED PENETRATIONS:
   1. Install approved product in accordance with the manufacturer's instructions where a pipe penetrates a fire/smoke rated surface. When pipe is insulated, use a product which maintains the integrity of the insulation and vapor barrier.
   2. Where firestop mortar is used to infill large fire-rated floor openings that could be required to support weight, provide permanent structural forming. Firestop mortar alone is not adequate to support substantial weight.

B. NON-RATED PARTITIONS:
   1. In exterior wall openings below grade, assemble rubber links of mechanical seal to the proper size for the pipe and tighten in place, in accordance with manufacturer's instructions.
   2. At all interior partitions and exterior walls, pipe penetrations are required to be sealed. Apply sealant to both sides of the penetration in such a manner that the annular space between the pipe sleeve or cored opening and the pipe or insulation is completely blocked.

END OF SECTION

INTENTIONALLY LEFT BLANK

SECTION 220516

EXPANSION FITTINGS AND LOOPS FOR PLUMBING PIPING

PART 1 GENERAL

1.1 SECTION INCLUDES

A. Flexible pipe connectors.

B. Expansion joints and compensators.

1.2 RELATED REQUIREMENTS

A. Section 221005 - Plumbing Piping.

1.3 REFERENCE STANDARDS

A. ASTM A 269 - Standard Specification for Seamless and Welded Austenitic Stainless Steel Tubing for General Service; 2008.

B. EJMA (STDS) - EJMA Standards; Expansion Joint Manufacturers Association; 2003.

1.4 SUBMITTALS

A. Product Data:
   1. Flexible Pipe Connectors: Indicate maximum temperature and pressure rating, face-to-face length, live length, hose wall thickness, hose convolutions per foot and per assembly, fundamental frequency of assembly, braid structure, and total number of wires in braid.
   2. Expansion Joints: Indicate maximum temperature and pressure rating, and maximum expansion compensation.

B. Manufacturer's Instructions: Indicate manufacturer's installation instructions, special procedures, and external controls.

PART 2 PRODUCTS

2.1 FLEXIBLE PIPE CONNECTORS - STEEL PIPING

A. Manufacturers:
   1. Mercer Rubber Company: www.mercer-rubber.com.
   2. Metraflex Company: www.metraflex.com.

B. Inner Hose: Stainless Steel.

C. Exterior Sleeve: Single braided, Stainless Steel.

D. Pressure Rating: 125 psi and 450 degrees F.

E. Joint: As specified for pipe joints.

F. Size: Use pipe sized units.

2.2 FLEXIBLE PIPE CONNECTORS - COPPER PIPING

A. Manufacturer:
   1. Mercer Rubber Company: www.mercer-rubber.com.
   2. Metraflex Company: www.metraflex.com.

B. Inner Hose: Bronze.

C. Exterior Sleeve: Braided bronze.

D. Pressure Rating: 125 psi and 450 degrees F.

E. Joint: As specified for pipe joints.

F. Size: Use pipe sized units.

G. Application: Copper piping.

2.3 EXPANSION JOINTS

A. Manufacturers:
   1. Mercer Rubber Company: www.mercer-rubber.com.
   2. Metraflex Company: www.metraflex.com.

B. Shall consist of two flexible sections of hose and braid, two 90 degree elbows and a 180 degree return assembled in such a way that piping does not change direction but maintains its course along a single axis. Approved for use with potable water.

C. Size: Use pipe sized units.

D. Application: Copper piping.

PART 3 EXECUTION

3.1 INSTALLATION

A. Install in accordance with manufacturer's instructions.

B. Install in accordance with EJMA (Expansion Joint Manufacturers Association) Standards.

C. Install flexible pipe connectors on pipes connected to vibration isolated equipment. Provide line size flexible connectors.

D. Install flexible connectors at right angles to displacement. Install one end immediately adjacent to isolated equipment and anchor other end. Install in horizontal plane unless indicated otherwise.

E. Install flexible pipe expansion loops on pipes before penetration of safe-room walls.

F. Provide support and equipment required to control expansion and contraction of piping. Provide loops, pipe offsets, and swing joints, or expansion joints where required.

END OF SECTION

SECTION 220519

METERS AND GAGES FOR PLUMBING PIPING

PART 1 GENERAL

1.1 SECTION INCLUDES

A. Pressure gages and pressure gage taps.

B. Thermometers and thermometer wells.

1.2 REFERENCE STANDARDS

A. ASME B40.100 - Pressure Gauges and Gauge Attachments; The American Society of Mechanical Engineers; 2005.

B. ASTM E 1 - Standard Specification for ASTM Liquid-in-Glass Thermometers; 2007.

C. ASTM E 77 - Standard Test Method for Inspection and Verification of Thermometers; 2007.

1.3 SUBMITTALS

A. Product Data: Provide list that indicates use, operating range, total range and location for manufactured components.

1.4 FIELD CONDITIONS

A. Do not install instrumentation when areas are under construction, except for required rough-in, taps, supports and test plugs.

PART 2 PRODUCTS

2.1 PRESSURE GAGES

A. Manufacturers:
   1. Dwyer Instruments, Inc: www.dwyer-inst.com.
   2. Moeller Instrument Co., Inc: www.moellerinstrument.com.
   3. Omega Engineering, Inc: www.omega.com.

B. Pressure Gages: ASME B40.100, UL 404 drawn steel case, phosphor bronze bourdon tube, rotary brass movement, brass socket, with front recalibration adjustment, black scale on white background.
   1. Case: Steel with brass bourdon tube or Cast aluminum with phosphor bronze bourdon tube.
   2. Size: 4-1/2 inch or 3-1/2 inch diameter.
   3. Mid-Scale Accuracy: Two percent.
   4. Scale: Psi.

2.2 PRESSURE GAGE TAPPINGS

A. Gage Cock: Tee or lever handle, brass for maximum 150 psi.

B. Needle Valve: Brass or Stainless Steel, 1/4 inch NPT for minimum 150 psi.

C. Pulsation Damper: Pressure snubber, brass with 1/4 inch connections.

2.3 STEM TYPE THERMOMETERS

A. Manufacturers:
   1. Dwyer Instruments, Inc: www.dwyer-inst.com.
   2. Weksler Glass Thermometer Corp: www.wekslerglass.com.
   3. H. O. Trerice: www.trerice.com.

B. Thermometers - Adjustable Angle: Red- or blue-appearing non-toxic liquid in glass; ASTM E 1; lens front tube, cast aluminum case with enamel finish, cast aluminum adjustable joint with positive locking device; adjustable 360 degrees in horizontal plane, 180 degrees in vertical plane.
   1. Size: 9 inch scale.
   2. Window: Clear glass.
   3. Stem: 3/4 inch NPT brass.
   4. Accuracy: 2 percent, per ASTM E 77.
   5. Calibration: Degrees F.

2.4 THERMOMETER SUPPORTS

A. Socket: Brass separable sockets for thermometer stems with or without extensions as required, and with cap and chain.

PART 3 EXECUTION

3.1 INSTALLATION

A. Install in accordance with manufacturer's instructions.

B. Install in locations where indicated on the drawings and/or details, with scale range appropriate to the system operating pressures.

C. Gauge Valves: Install at each gauge location as close to the main as possible and at each location where a gauge tapping is indicated.

D. Install pressure gages with pulsation dampers. Provide gage cock or needle valve to isolate each gage. Provide siphon on gages in steam systems. Extend nipples and siphons to allow clearance from insulation.

E. Install thermometers in piping systems in sockets in short couplings. Enlarge pipes smaller than 2-1/2 inch for installation of thermometer sockets. Ensure sockets allow clearance from insulation.

F. Install gages and thermometers in locations where they are easily read from normal operating level. Install vertical to 45 degrees off vertical.

G. Adjust gages and thermometers to final angle, clean windows and lenses, and calibrate to zero.

3.2 SCHEDULES

A. Stem Type Thermometers, Location and Scale Range:
   1. Domestic Hot water supply and recirculation, 30 to 240 Deg. F.

B. Pressure Gages, Location and Scale Range:
   1. Circulation pumps, 0 to 160 psi.

END OF SECTION

SECTION 220548

VIBRATION CONTROLS FOR PLUMBING PIPING AND EQUIPMENT

PART 1 GENERAL

1.1 SECTION INCLUDES

A. Vibration isolators.

1.2 SUBMITTALS

A. Product Data:
   1. Provide catalog illustrations of fixtures, sizes, rough-in dimensions, utility sizes, trim, and finishes.

1.3 QUALITY ASSURANCE

A. Perform design and installation in accordance with applicable codes.

PART 2 PRODUCTS

2.1 MANUFACTURERS

A. Isolation Technology, Inc: www.isolationtech.com.

B. Kinetics Noise Control, Inc: www.kineticsnoise.com.

C. Mason Industries: www.mason-ind.com.

D. Substitutions: Refer to applicable sections in Bidding Requirements and Division 1 - General Requirements.

2.2 VIBRATION ISOLATORS

A. Restrained Open Spring Isolators:
   1. Springs: Minimum horizontal stiffness equal to 75 percent vertical stiffness, with working deflection between 0.3 and 0.6 of maximum deflection. Color code springs for load carrying capacity.
   2. Spring Mounts: Provide with leveling devices, minimum 0.25 inch thick neoprene sound pads, and zinc chromate plated hardware.
   3. Sound Pads: Size for minimum deflection of 0.05 inch; meet requirements for neoprene pad isolators.
   4. Restraint: Provide heavy mounting frame and limit stops.
   5. For Humid Areas: Hot dipped galvanized housings and neoprene coated springs.

B. Neoprene Pad Isolators:
   1. Rubber or neoprene waffle pads.
   2. Hardness: 30 durometer.
   3. Thickness: Minimum 1/2 inch.
   4. Maximum Loading: 50 psi.
   5. Rib Height: Maximum 0.7 times width.
   6. Configuration: Single layer.

PART 3 EXECUTION

3.1 INSTALLATION

A. Install in accordance with manufacturer's instructions.

END OF SECTION

INTENTIONALLY LEFT BLANK

SECTION 220553

IDENTIFICATION FOR PLUMBING PIPING AND EQUIPMENT

PART 1 GENERAL

1.1 SECTION INCLUDES

A. Nameplates.

B. Tags.

C. Pipe Markers.

1.2 REFERENCE STANDARDS

A. ASME A13.1 - Scheme for the Identification of Piping Systems; The American Society of Mechanical Engineers; 2007.

1.3 SUBMITTALS

A. List: Submit list of wording, symbols, letter size, and color coding for mechanical identification.

B. Chart and Schedule: Submit valve chart and schedule, including valve tag number, location, function, and valve manufacturer's name and model number.

C. Manufacturer's Installation Instructions: Indicate special procedures, and installation.

D. Project Record Documents: Record actual locations of tagged valves.

PART 2 PRODUCTS

2.1 IDENTIFICATION APPLICATIONS

A. Major Components: Nameplates.

B. Piping: Tags or Pipe markers.

C. Small-sized Equipment: Tags.

D. Tanks: Nameplates.

E. Valves: Tags.

2.2 MANUFACTURERS

A. Brady Corporation: www.bradycorp.com.

B. Kolbi Pipe Marker Company: www.kolbipipemarkers.com.

C. Seton Identification Products: www.seton.com.

D. Craftmark: www.craftmarkid.com.

2.3 NAMEPLATES

A. Description: Laminated three-layer plastic with engraved letters.
   1. Letter Color: White.
   2. Letter Height: 1/4 inch.
   3. Background Color: Black.

2.4 TAGS

A. Plastic Tags: Laminated three-layer plastic with engraved black letters on light contrasting background color. Tag size minimum-1/2 inch diameter.

B. Metal Tags: Brass with stamped letters; tag size minimum 1-1/2 inch diameter with smooth edges.

C. Valve Tag Chart: Typewritten letter size list in anodized aluminum frame.

2.5 PIPE MARKERS

A. Comply with ASME A13.1.

B. Plastic Pipe Markers: Factory fabricated, flexible, semi- rigid plastic, preformed to fit around pipe or pipe covering; minimum information indicating flow direction arrow and identification of fluid being conveyed.

C. Plastic Tape Pipe Markers: Flexible, vinyl film tape with pressure sensitive adhesive backing and printed markings.

PART 3 EXECUTION

3.1 PREPARATION

A. Degrease and clean surfaces to receive adhesive for identification materials.

3.2 INSTALLATION

A. Install plastic nameplates with corrosive-resistant mechanical fasteners, or adhesive. Apply with sufficient adhesive to ensure permanent adhesion and seal with clear lacquer.

B. Install tags with corrosion resistant chain.

C. Install plastic pipe markers in accordance with manufacturer's instructions.

D. Install plastic tape pipe markers complete around pipe in accordance with manufacturer's instructions.

E. Identify valves in main and branch piping with tags.

F. Identify piping, concealed or exposed with plastic pipe markers. Use tags on piping 3/4 inch diameter and smaller.
   1. Identify service, flow direction, and pressure.
   2. Install in clear view and align with axis of piping.
   3. Locate identification not to exceed 20 feet on straight runs including risers and drops, adjacent to each valve and Tee, at each side of penetration of structure or enclosure, and at each obstruction.

END OF SECTION

SECTION 220719

PLUMBING PIPING INSULATION

PART 1 GENERAL

1.1 SECTION INCLUDES

A. Piping insulation.

B. Jackets and accessories.

1.2 RELATED REQUIREMENTS

A. Section 221005 - Plumbing Piping: Placement of hangers and hanger inserts.

1.3 REFERENCE STANDARDS

A. ASTM C 177 - Standard Test Method for Steady-State Heat Flux Measurements and Thermal Transmission Properties by Means of the Guarded Hot Plate Apparatus; 2004.

B. ASTM C 547 - Standard Specification for Mineral Fiber Pipe Insulation; 2007.

C. ASTM E 84 - Standard Test Method for Surface Burning Characteristics of Building Materials; 2010.

D. ASTM E 96/E 96M - Standard Test Methods for Water Vapor Transmission of Materials; 2005.

E. NFPA 255 - Standard Method of Test of Surface Burning Characteristics of Building Materials; National Fire Protection Association; 2006.

F. UL 723 - Standard for Test for Surface Burning Characteristics of Building Materials; Underwriters Laboratories Inc.; Current Edition, Including All Revisions.

1.4 SUBMITTALS

A. Product Data: Provide product description, thermal characteristics, list of materials and thickness for each service, and locations.

1.5 QUALITY ASSURANCE

A. Manufacturer Qualifications: Company specializing in manufacturing the Products specified in this section with not less than three years of documented experience. Products shall be manufactured at facilities certified and registered to conform to ISO 9001 Quality Standard.

B. Applicator Qualifications: Company specializing in performing the type of work specified in this section with minimum with minimum three years of documented experience and approved by manufacturer.

1.6 DELIVERY, STORAGE, AND HANDLING

A. Accept materials on site, labeled with manufacturer's identification, product density, and thickness.

B. Protect materials against damage before, during and after installation. No material shall be installed that has become damaged in any way.

1.7 FIELD CONDITIONS

A. Maintain ambient conditions required by manufacturers of each product.

B. Maintain temperature before, during, and after installation for minimum of 24 hours.

PART 2 PRODUCTS

2.1 REQUIREMENTS FOR ALL PRODUCTS OF THIS SECTION

A. Surface Burning Characteristics: Flame spread/Smoke developed index of 25/50, maximum, when tested in accordance with ASTM E 84, NFPA 255, or UL 723.

B. Insulating materials shall be fire retardant, moisture and mildew resistant, and vermin proof. Insulation shall be suitable to receive jackets, adhesives and coatings as indicated.

2.2 GLASS FIBER

A. Manufacturers:
   1. Knauf Insulation: www.knaufusa.com.
   2. Johns Manville Corporation: www.jm.com.
   3. Owens Corning Corporation: www.owenscorning.com.
   4. CertainTeed Corporation: www.certainteed.com.

B. Insulation: ASTM C 547 and ASTM C 795; rigid molded, noncombustible.
   1. 'K' value: ASTM C 177, 0.24 at 75 degrees F.
   2. Maximum service temperature: 850 degrees F.
   3. Maximum moisture absorption: 0.2 percent by volume.

C. Vapor Barrier Jacket: White kraft paper with glass fiber yarn, bonded to aluminized film with self-sealing longitudinal closure laps and butt strips; moisture vapor transmission when tested in accordance with ASTM E 96/E 96M of 0.02 perm-inches.

D. Tie Wire: 0.048 inch stainless steel with twisted ends on maximum 12 inch centers.

E. Vapor Barrier Lap Adhesive:
   1. Compatible with insulation.

F. Insulating Cement/Mastic:
   1. ASTM C 195; hydraulic setting on mineral wool.

G. Fibrous Glass Fabric:
   1. Cloth: Untreated; 9 oz/sq yd weight.
   2. Blanket: 1.0 lb/cu ft density.
   3. Weave: 5x5 10x10.

H. Indoor Vapor Barrier Finish:
   1. Cloth: Untreated; 9 oz/sq yd weight.
   2. Vinyl emulsion type acrylic, compatible with insulation, white color.

2.3 FLEXIBLE ELASTOMERIC CELLULAR INSULATION

A. Manufacturer:
   1. Armacell International: www.armacell.com.
   2. Aeroflex: www.aeroflexusa.com.
   3. Nomaco Insulation: www.nomacoinsulation.com.

B. Insulation: Preformed closed cell flexible elastomeric cellular rubber insulation complying with ASTM C 534 Grade 1; use molded tubular material wherever possible.
   1. Minimum Service Temperature: -40 degrees F.
   2. Maximum Service Temperature: 220 degrees F.
   3. Connection: Waterproof vapor barrier adhesive.

C. Elastomeric Foam Adhesive: Air dried, contact adhesive, compatible with insulation.

2.4 JACKETS

A. PVC Plastic.
   1. Manufacturers:
      a. Johns Manville Corporation: www. jm.com.

b. Knauf Insulation: www.knaufusa.com.
2. Jacket: One piece molded type fitting covers and sheet material, off-white color.
3. Covering Adhesive Mastic:
a. Compatible with insulation.

2.5 INSULATION INSERTS AND PIPE SHIELDS:

A. Manufacturers:
1. B-Line: www.bline.com.
2. Pipe Shields: www.pipeshieldinc.com.
3. Value Engineered Products: www.valueng.com.

B. Construct inserts with calcium silicate, minimum 140 psi compressive strength. Provide galvanized steel shield. Insert and shield to be minimum 180 degree coverage on bottom of supported piping and full 360 degree coverage on clamped piping. On roller mounted piping and piping designed to slide on support, provide additional load distribution steel plate.

C. Where Contractor proposes shop/site fabricated inserts and shields, submit schedule of materials, thicknesses, gauges and lengths for each pipe size to demonstrate equivalency to pre-engineered pre-manufactured product described above. On low temperature systems, extruded polystyrene may be substituted for calcium silicate provided insert and shield length and gauge are increased to compensate for lower insulation compressive strength.

D. Precompressed 20# density molded fiberglass blocks, Hamfab or equal, of same thickness as adjacent insulation may be substituted for calcium silicate inserts with one 1” x 6” block for piping through 2-1/2” and three 1” x 6” blocks for piping through 4”. Submit shield schedule to demonstrate equivalency to pre-engineered/pre-manufactured product described above.

E. Wood blocks will not be accepted.

PART 3 EXECUTION

3.1 EXAMINATION

A. Verify that piping has been tested before applying insulation materials.

B. Verify that surfaces are clean and dry, with foreign material removed.

3.2 INSTALLATION

A. Install in accordance with manufacturer's instructions.

B. Install in accordance with NAIMA National Insulation Standards.

C. Exposed Piping: Locate insulation and cover seams in least visible locations.

D. Insulated pipes conveying fluids below ambient temperature: Insulate entire system including fittings, valves, unions, flanges, strainers, flexible connections, and expansion joints.

E. Glass fiber insulated pipes conveying fluids below ambient temperature:
1. Provide vapor barrier jackets, factory-applied or field-applied. Secure with self-sealing longitudinal laps and butt strips with pressure sensitive adhesive. Secure with outward clinch expanding staples and vapor barrier mastic.
2. Insulate fittings, joints, and valves with molded insulation of like material and thickness as adjacent pipe. Finish with PVC fitting covers.

F. For hot piping conveying fluids 140 degrees F or less, do not insulate flanges and unions at equipment, but bevel and seal ends of insulation.

G. Glass fiber insulated pipes conveying fluids above ambient temperature:
1. Provide standard jackets, with or without vapor barrier, factory-applied or field-applied. Secure with self-sealing longitudinal laps and butt strips with pressure sensitive adhesive. Secure with outward clinch expanding staples.

2. Insulate fittings, joints, and valves with insulation of like material and thickness as adjoining pipe. Finish with PVC fitting covers.

H. Inserts and Shields:
   1. Provide insulation inserts and pipe shields at all hanger and support locations. Inserts may be omitted on 3/4” and smaller copper piping provided 12” long 22 gauge pipe shields are used.
   2. Shields: Galvanized steel between pipe hangers or pipe hanger rolls and inserts.
   3. Insert location: Between support shield and piping and under the finish jacket.

I. Continue insulation through walls, ceilings, sleeves, pipe hangers, and other pipe penetrations. Finish at supports, protrusions, and interruptions. Vapor barriers shall be maintained continuous through all penetrations.

J. All products shall be compatible with surfaces and materials on which they are applied, and be suitable for use at operating temperatures of the systems to which they are applied.

K. Use full-length material (as delivered from manufacturer) wherever possible. Scrap piecing of insulation or pieces cut undersize and stretched to fit will not be accepted.

3.3 SCHEDULES

A. Plumbing Systems:
   1. Domestic Water Supply Above Grade: Hot Water, Cold Water and Circulating Water.
      a. Glass Fiber Insulation:
         1) Pipe Size Range: All sizes.
         2) Thickness: Mains and branch lines 1 inch.
         3) Thickness: Branch lines serving individual fixtures, 1 inch.
   2. Domestic Water Supply Below grade: Cold Water.
      a. Preformed Flexible Elastomeric Cellular Insulation:
         1) Pipe Size Range: All sizes.
         2) Thickness: 1 inch.
      b. Insulation rated for direct burial.
   3. Roof Drains Bodies:
      a. Glass Fiber Insulation, 1” thick.
   4. Roof Drainage Above Grade:
      a. Glass Fiber Insulation.
      b. Thickness: Mains and branch lines 1 inch.

END OF SECTION

SECTION 221005

PLUMBING PIPING

PART 1 GENERAL

1.1 SECTION INCLUDES

A. Pipe, pipe fittings, valves, and connections for piping systems.
   1. Sanitary sewer.
   2. Domestic water.
   3. Storm sewer.
   4. Natural gas.

1.2 RELATED REQUIREMENTS

A. Section 220516 - Expansion Fittings and Loops for Plumbing Piping.

B. Section 220553 - Identification for Plumbing Piping and Equipment.

C. Section 220719 - Plumbing Piping Insulation.

1.3 REFERENCE STANDARDS

A. ANSI Z21.22 - American National Standard for Relief Valves and Automatic Gas Shutoff Devices for Hot Water Supply Systems; 1999, and addenda A&B (R2004).

B. ASME B16.1 - Gray Iron Pipe Flanges and Flanged Fittings: Classes 25, 125, and 250; The American Society of Mechanical Engineers; 2005.

C. ASME B16.3 - Malleable Iron Threaded Fittings; The American Society of Mechanical Engineers; 1998 (R2006).

D. ASME B31.1 - Power Piping; The American Society of Mechanical Engineers; 2007 (ANSI/ASME B31.1).

E. ASME B31.9 - Building Services Piping; The American Society of Mechanical Engineers; 2008 (ANSI/ASME B31.9).

F. ASTM A 53/A 53M - Standard Specification for Pipe, Steel, Black and Hot-Dipped, Zinc-Coated, Welded and Seamless; 2007.

G. ASTM A 74 - Standard Specification for Cast Iron Soil Pipe and Fittings; 2006.

H. ASTM B 42 - Standard Specification for Seamless Copper Pipe, Standard Sizes; 2002.

I. ASTM B 88 - Standard Specification for Seamless Copper Water Tube; 2003.

J. ASTM D 1785 - Standard Specification for Poly(Vinyl Chloride) (PVC) Plastic Pipe, Schedules 40, 80, and 120; 2006.

K. ASTM D 2239 - Standard Specification for Polyethylene (PE) Plastic Pipe (SIDR-PR) Based on Controlled Inside Diameter; 2003.

L. ASTM D 2241 - Standard Specification for Poly (Vinyl Chloride) (PVC) Pressure-Rated Pipe (SDR Series); 2005.

M. ASTM D 2447 - Standard Specification for Polyethylene (PE) Plastic Pipe, Schedules 40 and 80, Based on Outside Diameter; 2003.

N. ASTM D 2466 - Standard Specification for Poly(Vinyl Chloride) (PVC) Plastic Pipe Fittings, Schedule 40; 2006.

O. ASTM D 2665 - Standard Specification for Poly(Vinyl Chloride) (PVC) Plastic Drain, Waste, and Vent Pipe and Fittings; 2008.

P. ASTM D 3034 - Standard Specification for Type PSM Poly(Vinyl Chloride) (PVC) Sewer Pipe and Fittings; 2006.

Q. ASTM F 441/F 441M - Standard Specification for Chlorinated Poly(Vinyl Chloride) (CPVC) Plastic Pipe, Schedules 40 and 80; 2002.

R. ASTM F 876, ASTM F 877 - Standard Specification for Crosslinked Polyethylene (PEX) Tubing
   1. Engel or PEX-a method.

S. AWWA C651 - Disinfecting Water Mains; American Water Works Association; 2005 (ANSI/AWWA C651).

T. AWWA C900 - Polyvinyl Chloride (PVC) Pressure Pipe, 4 In. Through 12 In. (100 mm Through 300 mm), for Water Distribution; American Water Works Association; 2007 (ANSI/AWWA C900).

U. AWWA C901 - Polyethylene (PE) Pressure Pipe and Tubing, 1/2 In. (13 mm) Through 3 In. (76 mm), for Water Service; American Water Works Association; 2008.

V. AWWA C950 - Fiberglass Pressure Pipe; American Water Works Association; 2007 (ANSI/AWWA C950).

W. CISPI 301 - Standard Specification for Hubless Cast Iron Soil Pipe and Fittings for Sanitary and Storm Drain, Waste and Vent Piping Applications; Cast Iron Soil Pipe Institute; 2005.

X. CISPI 310 - Specification for Coupling for Use in Connection with Hubless Cast Iron Soil Pipe and Fittings for Sanitary and Storm Drain, Waste, and Vent Piping Applications; Cast Iron Soil Pipe Institute; 2004.

Y. MSS SP-58 - Pipe Hangers and Supports - Materials, Design and Manufacture; Manufacturers Standardization Society of the Valve and Fittings Industry, Inc.; 2009.

Z. MSS SP-69 - Pipe Hangers and Supports - Selection and Application; Manufacturers Standardization Society of the Valve and Fittings Industry, Inc.; 2003.

AA. MSS SP-89 - Pipe Hangers and Supports - Fabrication and Installation Practices; Manufacturers Standardization Society of the Valve and Fittings Industry, Inc.; 2003.

BB. MSS SP-110 - Ball Valves Threaded, Socket-Welding, Solder Joint, Grooved and Flared Ends; Manufacturers Standardization Society of the Valve and Fittings Industry, Inc.; 1996.

CC. NFPA 54 - National Fuel Gas Code; National Fire Protection Association; 2009.

1.4 SUBMITTALS

A. Product Data: Provide data on pipe materials, pipe fittings, valves, and accessories. Provide manufacturers catalog information. Indicate valve data and ratings.

B. Project Record Documents: Record actual locations of valves.

1.5 QUALITY ASSURANCE

A. Perform Work in accordance with State of Oklahoma standards.

B. Valves: Manufacturer's name and pressure rating marked on valve body.

C. Welder Qualifications: Certified in accordance with ASME B31.9 Building Services Piping.

D. Identify pipe with marking including size, ASTM material classification, ASTM specification, potable water certification, water pressure rating.

1.6 REGULATORY REQUIREMENTS

A. Perform Work in accordance with State of Oklahoma, City of Moore plumbing code.

B. Conform to applicable code for installation of backflow prevention devices.

C. Provide certificate of compliance from authority having jurisdiction indicating approval of installation of backflow prevention devices.

1.7 DELIVERY, STORAGE, AND HANDLING

A. Accept valves on site in shipping containers with labeling in place. Inspect for damage.

B. Provide temporary protective coating on cast iron and steel valves.

C. Protect piping systems from entry of foreign materials by temporary covers, completing sections of the work, and isolating parts of completed system.

1.8 FIELD CONDITIONS

A. Do not install underground piping when bedding is wet or frozen.

PART 2 PRODUCTS

2.1 SANITARY SEWER PIPING, BELOW GRADE

A. PVC Pipe: Schedule 40 ASTM D 2665.
   1. Fittings: PVC.
   2. Joints: Solvent welded, with ASTM D 2564 solvent cement.

2.2 SANITARY SEWER PIPING, ABOVE GRADE

A. PVC Pipe: Schedule 40 ASTM D 2665.
   1. Fittings: PVC.
   2. Joints: Solvent welded, with ASTM D 2564 solvent cement.

2.3 WATER PIPING, BURIED WITHIN 5 FEET OF BUILDING

A. Cross-Linked Polyethylene Tubing (PEX-a or Engel method): ASTM F 876, ASTM F 877
   1. Fittings: ASTM F 1960.
   2. Joints: No joints located below grade.
   3. Install per manufacturer's instructions.
   4. Provide PVC sleeve at penetrations of concrete floor.

B. Copper Pipe: ASTM B 88, Type K (Annealed Temper).
   1. Fittings: cast copper pressure fittings, ANSI B16.18; wrought copper pressure fittings, ANSI B16.22; lead free (<.2%) solder, ASTM B32; flux, ASTM B813; or cast copper flared pressure fittings, ANSI B16.26.
   2. Joints: No joints below grade.
   3. Application: piping for trap primers only.

C. Tracer wire for non-metallic and plastic pipe: Magnetic detectable conductor, plastic covering, rated for underground service, imprinted with words "Water Service".

2.4 WATER PIPING, ABOVE GRADE

A. Copper Tube: ASTM B 88 (ASTM B 88M), Type L (B), Drawn (H).
   1. Fittings: ASME B16.18, cast copper alloy or ASME B16.22, wrought copper and bronze.
   2. Joints: ASTM B 32, alloy Sn95 solder.
   3. Mechanical press sealed fittings, 3" size and smaller. Copper and copper alloy press fittings shall conform to material requirements of ASME B16.18 or ASME B16.22 and performance criteria of IAPMO PS 117. Fittings shall be double pressed type NSF/ANSI 61 approved and utilize EPDM sealing elements. Sealing elements shall be factory installed.

B. Cross-Linked Polyethylene Tubing (PEX-a or Engel method): ASTM F 876, ASTM F 877
   1. Fittings: ASTM F 1960.
   2. Locations: concealed branch lines to individual fixture, no exposed tubing.
   3. Install per manufacturer's instructions.
   4. Approved for contact with potable water in accordance with NSF 61 and NSF 14.

2.5 STORM WATER PIPING BELOW GRADE

A. PVC Pipe: Schedule 40 ASTM D 2665.
   1. Fittings: PVC.
   2. Joints: Solvent welded, with ASTM D 2564 solvent cement.

2.6 STORM WATER PIPING ABOVE GRADE

A. PVC Pipe: Schedule 40 ASTM D 2665.
   1. Fittings: PVC.
   2. Joints: Solvent welded, with ASTM D 2564 solvent cement.

2.7 NATURAL GAS PIPING – ABOVE GRADE

A. Steel Pipe: ASTM A 53/A 53M Schedule 40 black.
   1. Fittings: ASME B16.3, malleable iron, or ASTM A 234/A 234M, wrought steel welding type.
   2. Joints: NFPA 54, threaded or welded to ASME B31.1,
   3. Mechanical press sealed fittings, 65 mm (2-1/2”) in size and smaller. Fittings shall conform to material requirements of ASTM A420 or ASME B16.3 and performance criteria ANSI LC-4/CSA 6.32 and NFPA-54. Sealing elements for press fittings shall be HNBR. Wrought carbon steel and alloy steel. Sealing elements shall be factory installed.

B. Corrugated Stainless Steel Tubing (CSST): ANSI LC-1 Standard, ASTM A240, Type 304, 321 stainless steel with 2400 degrees F melting point.
   1. Jacket: UV resistant polyethylene with 350 degrees F melting point and fire-resistance tested in accordance with ASTM E84.
   2. Fittings: Mechanical type complying with ASTM B 16.
   3. Use CSST tubing for equipment connections only. Do not use for mains or exterior use.

2.8 NATURAL GAS PIPING, BURIED OUTSIDE OF BUILDING

A. Polyethylene Pipe – Medium Density (MDPE): ASTM D 2513
   1. Fittings: ASTM D 2683 or ASTM D 2513 socket type.
   2. Joints: Fusion welded.

B. Exterior below grade use only.

C. Provide anodeless gas riser for transition from below grade to above grade.

2.9 FLANGES, UNIONS, AND COUPLINGS

A. Unions for Pipe Sizes 3 Inches and Under:
   1. Ferrous pipe: Class 150 malleable iron threaded unions.
   2. Copper tube and pipe: Class 150 bronze unions with soldered joints.

B. Flanges for Pipe Size Over 1 Inch:
   1. Ferrous pipe: Class 150 malleable iron threaded or forged steel slip-on flanges; preformed neoprene gaskets.
   2. Copper tube and pipe: Class 150 slip-on bronze flanges; preformed neoprene gaskets.

C. Dielectric Connections: Union with galvanized or plated steel threaded end, copper solder end, water impervious isolation barrier.

2.10 PIPE HANGERS AND SUPPORTS

A. Plumbing Piping - Drain, Waste, and Vent:
   1. Conform to ASME B31.9 ASTM F 708 MSS SP-58, MSS SP-69, MSS SP-89.
   2. Hangers for Pipe Sizes 1/2 Inch to 1-1/ Inches: Malleable iron, adjustable swivel, split ring.
   3. Hangers for Pipe Sizes 2 Inches and Over: Carbon steel, adjustable, clevis.
   4. Multiple or Trapeze Hangers: Steel Unistrut channels or equal with clamps and hanger rods.
   5. Wall Support for Pipe Sizes to 3 Inches: Cast iron hook.
   6. Wall Support for Pipe Sizes 4 Inches and Over: Welded steel bracket and wrought steel clamp.

7. Vertical Support: Steel riser clamp.
8. Floor Support: Cast iron adjustable pipe saddle, lock nut, nipple, floor flange, and concrete pier or steel support.

B. Plumbing Piping - Water:
1. Conform to ASME B31.9, ASTM F 708 MSS SP-58, MSS SP-69, MSS SP-89.
2. Hangers for Pipe Sizes 1/2 Inch to 1-1/2 Inches: Malleable iron, adjustable swivel, split ring.
3. Hangers for Cold Pipe Sizes 2 Inches and Over: Carbon steel, adjustable, clevis.
4. Hangers for Hot Pipe Sizes 2 Inches to 4 Inches: Carbon steel, adjustable, clevis.
5. Multiple or Trapeze Hangers: Steel Unistrut channels or equal with clamps and hanger rods.
6. Wall Support for Pipe Sizes to 3 Inches: Cast iron hook.
7. Wall Support for Pipe Sizes 4 Inches and Over: Welded steel bracket and wrought steel clamp.
8. Vertical Support: Steel riser clamp.
9. Floor Support for Cold Pipe: Cast iron adjustable pipe saddle, lock nut, nipple, floor flange, and concrete pier or steel support.
10. Copper Pipe Support: Carbon steel ring, adjustable, copper plated.

2.11 BALL VALVES

A. Manufacturers:
1. Conbraco Industries: www.conbraco.com.
2. Nibco, Inc.: www.nibco.com.
3. Milwaukee Valve Company: www.milwaukeevalve.com.

B. Construction, 4 Inches and Smaller: MSS SP-110, Class 150, 400 psi CWP, bronze, two piece body, chrome plated brass ball, regular port, teflon seats and stuffing box ring, blow-out proof stem, lever handle with balancing stops, solder or threaded ends with union. Provide valve stem extensions for valves installed in all piping with insulation.
1. Domestic water: Valves shall be lead-free design (NSF/ANSI 372) and comply with NSF/ANSI 61 for potable water use.

C. Natural Gas Ball valves – 4" and smaller: Ball or eccentric plug valve, bronze or cast iron body, 2" and under threaded ends, 2-1/2" and over flanged ends, chrome plated bronze ball, bronze or nickel plated cast iron plug, TFE or Hycar seats and seals, lever handle, 175 psi W.O.G., U.L listed for use as natural gas shut-off.

2.12 SPRING LOADED CHECK VALVES

A. Manufacturers:
1. Watts: www.watts.com.
2. Apollo Valves.
3. Nibco.

B. 2" and smaller: Bronze body, sweat or threaded ends, bronze trim, stainless steel spring, stainless steel center guide pin, Class 125, teflon seat unless only bronze available, sweat or threaded ends.

C. Valves shall be lead-free design and rated for domestic potable water use.

2.13 RELIEF VALVES

A. Temperature and Pressure Relief:
1. Manufacturers:
a. Taco: www.taco-hvac.com.
b. Watts Regulator Company: www.wattsregulator.com.
2. AGA Z21.22 certified, bronze body, teflon seat, stainless steel stem and springs, automatic, direct pressure actuated, temperature relief maximum 210 degrees F, capacity ASME (BPV IV) certified and labeled.

2.14 STRAINERS

A. Manufacturers:
   1. Armstrong International, Inc.: www.armstronginternational.com.
   2. Watts: www.watts.com.
   3. Substitutions: Refer to applicable sections in Bidding Requirements and Division 1 - General Requirements.

B. Size 2 inch and Under:
   1. Threaded brass body for 175 psi CWP, Y pattern with 1/32 inch stainless steel perforated screen.

C. Class 150, threaded bronze body 300 psi CWP, Y pattern with 1/32 inch stainless steel perforated screen.

PART 3 EXECUTION

3.1 EXAMINATION

A. Verify that excavations are to required grade, dry, and not over-excavated.

3.2 PREPARATION

A. Ream pipe and tube ends. Remove burrs. Bevel plain end ferrous pipe.

B. Remove scale and dirt, on inside and outside, before assembly.

C. Prepare piping connections to equipment with flanges or unions.

3.3 INSTALLATION

A. Install in accordance with manufacturer's instructions.

B. Install water service entrance piping in accordance with requirements of school district and city of Moore.

C. Provide tracer wire for below grade non-metallic piping.

D. Provide non-conducting dielectric connections wherever jointing dissimilar metals.

E. Route piping in orderly manner and maintain gradient. Route parallel and perpendicular to walls.

F. Install piping to maintain headroom, conserve space, and not interfere with use of space.

G. Group piping whenever practical at common elevations.

H. Install piping to allow for expansion and contraction without stressing pipe, joints, or connected equipment. Refer to Section 220516.

I. Provide clearance in hangers and from structure and other equipment for installation of insulation and access to valves and fittings. Refer to Section 220719.

J. Provide access where valves and fittings are not exposed. Coordinate size and location of access doors with General Contractor.

K. Establish elevations of buried piping outside the building to ensure proper cover.

L. Install vent piping penetrating roofed areas to maintain integrity of roof assembly.

M. Where pipe support members are welded to structural building framing, scrape, brush clean, and apply one coat of zinc rich primer to welding.

N. Provide support for utility meters in accordance with requirements of utility companies.

O. Excavate in accordance with Division 31.

P. Backfill in accordance with Division 31.

Q. Install valves with stems upright or horizontal, not inverted.

R. Install water piping to ASME B31.9.

S. PVC Pipe: Make solvent-welded joints in accordance with ASTM D 2855.

T. Sleeve pipes passing through partitions, walls and floors.

U. Pipe Hangers and Supports:
   1. Installation shall be compliant with International Building Code (IBC) for Class D seismic site requirements.
   2. Install in accordance with MSS SP-58, MSS SP-69, MSS SP-89, ASME B31.9.
   3. Support horizontal piping as scheduled.
   4. Install hangers to provide minimum 1/2 inch space between finished covering and adjacent work.
   5. Place hangers within 12 inches of each horizontal and vertical elbow.
   6. Use hangers with 1-1/2 inch minimum vertical adjustment. Design hangers for pipe movement without disengagement of supported pipe.
   7. Support vertical piping at every floor. Support riser piping independently of connected horizontal piping.
   8. Where several pipes can be installed in parallel and at same elevation, provide multiple or trapeze hangers.
   9. Provide copper plated hangers and supports for copper piping sheet lead packing between hanger or support and piping.
   10. Prime coat exposed steel hangers and supports. Hangers and supports located in crawl spaces, pipe shafts, and suspended ceiling spaces are not considered exposed.
   11. Provide hangers adjacent to motor driven equipment with vibration isolation; refer to Section 220548.
   12. Support cast iron drainage piping at every joint.

V. Install PEX tubing in accordance with the tubing manufacturer's recommendations and as indicated in the installation handbook.

W. Use strike protectors where PEX tubing penetrates a stud or joist and has the potential for being struck with a screw or nail.

X. Install pipe identification per section 220553, this section and all applicable codes.

Y. Press connections: Copper and copper alloy press connections shall be made in accordance with the manufacturer’s installation instructions. The joints shall be pressed using the tool(s) approved by the fitting manufacturer.

Z. Natural gas: Pitch horizontal piping down 1" in 60 feet in the direction of flow. Install a 4" minimum depth dirt leg at the bottom of each vertical run and at each appliance. When installing mains and branches, cap gas tight each tee or pipe end which will not be immediately extended. All branch connections to the main shall be from the top or side of the main. Teflon tape is acceptable for use on natural gas lines. Do not install gas pipe in a ventilation air plenum.
   1. Clean all gas piping before all regulators and service valves are installed and before unit connections are made. Test by placing target cloth over piping and blow with compressed air. Clean piping until target cloth is clean and free of debris.
   2. Install a shut off valve at each appliance. Provide a valve connection at the main for equipment and appliances furnished by others.
   3. Each gas pressure reducing valve vent and relief valve shall have a vent limiter or vent shall be run separately to a point outside of the building, terminated with a screened vent cap, and located according to gas utility regulations.
   4. Paint all exposed natural gas pipe with zinc rich primer and two coats of enamel formulated paint for metal surfaces. Color to be yellow or as selected by Architect.

3.4 APPLICATION

A. Use grooved mechanical couplings and fasteners only in accessible locations.

B. Install unions downstream of valves and at equipment or apparatus connections.

C. Install ball, valves for shut-off and to isolate equipment, part of systems, or vertical risers.

D. Install ball, valves for throttling, bypass, or manual flow control services.

E. Provide ball valves in natural gas systems for shut-off service.

F. Provide spring loaded check valves on discharge of water pumps.

G. Provide flow controls in water recirculating systems where indicated.

3.5 TOLERANCES

A. Drainage Piping: Establish invert elevations within 1/2 inch vertically of location indicated and slope to drain at minimum of 1/4 inch per foot for piping less than 3 inches and 1/8 inch per foot slope for piping 3 inches or greater for interior piping. Install exterior piping pitched to drain at indicated elevations and slope.

B. Water Piping: Slope piping to drain at low points.

3.6 DISINFECTION OF DOMESTIC WATER PIPING SYSTEM

A. Disinfect water distribution system as required per state and local codes.

B. Prior to starting work, verify system is complete, flushed and clean.

C. Take samples no sooner than 24 hours after flushing, from 10 percent of outlets and from water entry, and analyze in accordance with AWWA C651, AWWA C652 or local authority having jurisdiction.

3.7 PIPING SYSTEM LEAK TESTS

A. Isolate or remove components from system which are not rated for test pressure. Test piping in sections or entire system as required by sequence of construction. Do not insulate or conceal above grade piping until it has been successfully tested.

B. If required for the additional pressure load under test, provide temporary restraints at fittings or expansion joints.

C. For hydrostatic tests, use clean water and remove all air from the piping being tested by means of air vents or loosening of flanges/unions. Measure and record test pressure at the high point in the system.

D. For air tests, gradually increase the pressure to not more than one half of the test pressure; then increase the pressure in steps of approximately one-tenth of the test pressure until the required test pressure is reached. Examine all joints and connections with a soap bubble solution or equivalent method. System will not be approved until it can be demonstrated that there is no measurable loss of test pressure during the test period.

E. Inspect system for leaks. Where leaks occur, repair the area with new materials and repeat the test; caulking will not be acceptable.

F. Entire test must be witnessed by the Authority Having Jurisdiction.

G. Leak test: Shall conform to requirements of IPC and local codes.
   1. Water supply system.
   2. Drainage and vent system.

H. Gas piping systems:
   1. Perform initial pressure test prior to concealing tubing with wall and ceiling finishes and before connecting appliances.

2. Perform final pressure test after construction is complete and finishes applied, system may be re-tested to verify no damage has occurred to gas piping system.
3. Connect appliances and equipment to gas piping system and test connections for leakage.

3.8 SERVICE CONNECTIONS

A. Provide new sanitary and storm sewer services with connection to new sewer lines. Before commencing work check invert elevations required for sewer connections, confirm inverts and ensure that these can be properly connected with slope for drainage and cover to avoid freezing. Coordinate sewer location and invert elevation with site contractor.

B. Domestic water: Before commencing work check locations and sizes of existing cold water main. Provide new water service to addition with shut-off valve and connect to existing system. Coordinate with owner for any existing water system shut down for making new connection.
   1. Coordinate water service requirements with Moore school district.

C. Provide new natural gas service from existing exterior gas meter. Gas service distribution piping after meter to have initial minimum pressure of 2 psi. Provide regulators on each line serving gravity type appliances, sized in accordance with equipment. New gas service and meter, coordinate new gas load with Gas company (ONG).

3.9 SCHEDULES

A. Pipe Hanger Spacing:
   1. Metal Piping:
      a. Pipe size: 1/2 inches to 1-1/4 inches:
         1) Maximum hanger spacing: 6 ft.
         2) Hanger rod diameter: 3/8 inches.
      b. Pipe size: 1-1/2 inches to 2 inches:
         1) Maximum hanger spacing: 10 ft.
         2) Hanger rod diameter: 3/8 inch.
      c. Pipe size: 2-1/2 inches to 3 inches:
         1) Maximum hanger spacing: 10 ft.
         2) Hanger rod diameter: 1/2 inch.
   2. Plastic Piping - PVC:
      a. All Sizes:
         1) Maximum hanger spacing: 4 ft.
         2) Hanger rod diameter: 3/8 inch.
   3. Cross-linked Polyethylene (PEX-a) piping:
      a. All Sizes:
         1) Maximum hanger spacing: 2’-8”.
         2) Hanger rod diameter: 3/8 inch.
         3) Hanger spacing per piping manufacturer’s instructions.
      b. The use of horizontal rigid metal channel supporting the tubing with hangers spaced at maximum of 6 ft. per tubing manufacturer’s instructions shall be allowed with approval of local plumbing code.

END OF SECTION

INTENTIONALLY LEFT BLANK

SECTION 221006

PLUMBING PIPING SPECIALTIES

PART 1 GENERAL

1.1 SECTION INCLUDES

A. Roof drains.

B. Floor drains and floor sinks.

C. Cleanouts.

D. Hydrants.

E. Water hammer arrestors.

F. Thermostatic mixing valves.

G. Trap primer valves.

H. Sanitary backwater valves.

I. Refrigerator valve and recessed box.

J. Thermostatic balancing valve.

1.2 RELATED REQUIREMENTS

A. Section 221005 - Plumbing Piping.

B. Section 223000 - Plumbing Equipment.

C. Section 224000 - Plumbing Fixtures.

1.3 REFERENCE STANDARDS

A. ASME A112.6.4 - Roof, Deck, and Balcony Drains; The American Society of Mechanical Engineers; 2003.

B. ASSE 1011 - Hose Connection Vacuum Breakers; American Society of Sanitary Engineering; 2004 (ANSI/ASSE 1011).

C. ASSE 1012 - Backflow Preventer with Intermediate Atmospheric Vent; American Society of Sanitary Engineering; 2002 (ANSI/ASSE 1012).

D. ASSE 1019 - Vacuum Breaker Wall Hydrants, Freeze Resistant Automatic Draining Type; American Society of Sanitary Engineering; 2004, and Errata 2005 (ANSI/ASSE 1019).

E. PDI-WH 201 - Water Hammer Arresters; Plumbing and Drainage Institute; 2006.

1.4 SUBMITTALS

A. Product Data: Provide component sizes, rough-in requirements, service sizes, and finishes.

B. Shop Drawings: Indicate dimensions, weights, and placement of openings and holes.

C. Manufacturer's Instructions: Indicate Manufacturer's Installation Instructions: Indicate assembly and support requirements.

D. Maintenance Materials: Furnish the following for Owner's use in maintenance of project.
   1. Refer to applicable sections in Bidding Requirements and Division 1 - General Requirements, for additional provisions.
   2. Extra Loose Keys for Outside wall hydrants: Two.

1.5 QUALITY ASSURANCE

A. Manufacturer Qualifications: Company specializing in manufacturing the Products specified in this section with not less than three years documented experience.

1.6 DELIVERY, STORAGE, AND HANDLING

A. Accept specialties on site in original factory packaging. Inspect for damage.

PART 2 PRODUCTS

2.1 DRAINS

A. Manufacturers:
   1. Sioux Chief Manufacturing: www.siouxchief.com.
   2. Wade Drains: www.wadedrains.com.
   3. Zurn Industries, Inc.: www.zurn.com.
   4. Substitutions: Refer to applicable sections in Bidding Requirements and Division 1 - General Requirements.

B. Roof Drain:
   1. Assembly: ASME A112.6.4. Galvanized cast iron with sump. Cast iron dome strainer integral gravel stop, membrane flange and adjustable deck clamp as required for installation.

C. Downspout Nozzles: Bronze round with wall flange and offset bottom section.

D. Floor Drain:
   1. ASME A112.6.3; lacquered cast iron two piece body with double drainage flange, weep holes, reversible clamping collar, and round adjustable nickel-bronze strainer. Trap primer connection. Vandal resistant strainer screws.
   2. Adjustable strainer height after concrete floor is poured for strainer flush with finished floor covering.

E. Floor Sink:
   1. ASME, square cast iron body with anchor flange, white acid resisting porcelain enamel interior and top, ABS anti-splash interior bottom dome strainer, medium duty square 1/2 grate.

F. Refer to Plumbing Fixture Schedule on plans.

2.2 CLEANOUTS

A. Manufacturers:
   1. Wade Drains: www.wadedrains.com.
   2. Zurn Industries, Inc.: www.zurn.com.
   3. Sioux Chief Manufacturing: www.siouxchief.com.
   4. Substitutions: Refer to applicable sections in Bidding Requirements and Division 1 - General Requirements.

B. Cleanouts at Exterior Areas :
   1. Line type with lacquered cast iron body and round epoxy coated gasketed cover. Cast iron cleanout ferrule with threaded brass raised head. Access housing with adjustable anchor flange and extra heavy secured scoriated ductile iron cover with vandal resistant screws. Provide concrete pad for cleanout.

C. Cleanouts at Interior Finished Floor Areas:
   1. Lacquered cast iron body with anchor flange, reversible clamping collar, threaded top assembly, and round gasketed scored cover in service areas and round gasketed depressed cover to accept floor finish in finished floor areas. Provide cover with vandal-proof screws.

D. Cleanouts at Interior Finished Wall Areas:
   1. Line type with lacquered cast iron body and round epoxy coated gasketed cover, and round stainless steel access cover secured with vandal-proof screw.

E. Refer to Plumbing Fixture Schedule on plans.

2.3 HYDRANTS

A. Manufacturers:
   1. Woodford Manufacturing: www.woodfordmfg.com.
   2. Jay R. Smith Manufacturing Company: www.jayrsmith.com.
   3. Zurn Industries, Inc.: www.zurn.com.
   4. Substitutions: Refer to applicable sections in Bidding Requirements and Division 1 - General Requirements.

B. Roof Hydrant:
   1. ASSE 1052; Freezeproof / Pollution-proof post-type, with below-roof reservoir with locking handle, 1” or 3/4" inlet, 3/4" hose thread outlet, ASSE 1052 backflow preventer outlet, 1-1/4" galvanized steel casing pipe, freeze resistant, roof mounting hardware, below roof deck drain outlet to be piped to nearest hub drain or floor sink.

C. Wall Hydrants:
   1. ASSE 1019; freeze resistant, self-draining type with chrome plated wall box with hinged door hose thread spout, removable key and integral vacuum breaker.

D. Refer to Plumbing Fixture Schedule on plans.

2.4 WATER HAMMER ARRESTORS

A. Manufacturers:
   1. Wade Drains: www.wadedrains.com.
   2. Watts Water Technologies: www.watts.com.
   3. Zurn Industries, Inc.: www.zurn.com.
   4. Substitutions: Refer to applicable sections in Bidding Requirements and Division 1 - General Requirements.

B. Water Hammer Arrestors:
   1. Stainless steel construction, bellows type sized in accordance with PDI-WH 201, precharged suitable for operation in temperature range -100 to 300 degrees F and maximum 250 psi working pressure.

2.5 THERMOSTATIC MIXING VALVES

A. Thermostatic Mixing Valves:
   1. Manufacturers:
      a. Watts Water Technologies: www.watts.com.
      b. Lawler Manufacturing: www.temperedwater.com.
      c. Leonard Valve Company: www.leonardvalve.com.
      d. Substitutions: Refer to applicable sections in Bidding Requirements and Division 1 - General Requirements.

B. Valve: Lead free brass body, integral temperature, adjustment, check valves. Valve shall be ASSE 1070 listed.

2.6 TRAP PRIMER VALVES

A. Manufacturers:
   1. Sioux Chief Manufacturing: www.siouxchief.com.
   2. Precision Plumbing Products (PPP) Industries: www.pppinc.com.
   3. Zurn: www.zurn.com.
   4. Substitutions: Refer to applicable sections in Bidding Requirements and Division 1 - General Requirements.

B. Bronze body, O-ring seals, integral threaded outlet vacuum breaker, adjustable, in conformance with ANSI/ASSE 1018.
   1. Provide distribution unit for up to four outlets.

C. Electric trap priming assembly: the primer will come with an electronic timer that will deliver 2 ozs of water to floor drains every 24 hours. The primer will come complete with a solenoid valve, electronic timer, ½" male inlet, an air gap fitting with a ½" female thread outlet and hard-wired electrical connection (120 volt). The primer will come with a test switch to test functionality. Provide distribution unit for up to four outlets or manifold for over 4 outlets.

D. Refer to Plumbing Fixtures Schedule on plans. Provide as required by local codes.

2.7 SANITARY BACKWATER VALVES

A. Manufacturers:
   1. Rectorseal: www.rectorseal.com.
   2. Oatey: www.oatey.com.
   3. Substitutions: Refer to applicable sections in Bidding Requirements and Division 1 - General Requirements.

B. PVC body with valve flapper, valve extension pipe with tee handle for manual operation of flapper valve, threaded collar for access riser to grade, threaded access cover.

C. Refer to Plumbing Fixtures Schedule on plans.

2.8 REFRIGERATOR VALVE AND RECESSED BOX

A. Box Manufacturers:
   1. IPS Corporation/Water-Tite: www.ipscorp.com.
   2. Oatey: www.oatey.com.
   3. Sioux chief:
   4. Substitutions: Refer to Bidding Requirements and Division 1 - General Requirements.

B. Description: Plastic preformed rough-in box with quarter turn brass valve, water hammer arrestor, slip in finishing cover.

C. Refer to Plumbing Fixture Schedule on plans.

2.9 THERMOSTATIC BALANCING VALVE

A. Manufacturers:
   1. ThermOmegaTech: www.circuitsolver.com.
   2. Caleffi North America, Inc: www.caleffi.com.
   3. Substitutions: Refer to Bidding Requirements and Division 1 - General Requirements.

B. Valve: thermostatically controlled balancing valve shall be self contained and fully automatic. Valve shall regulate flow of recirculated domestic hot water based on water temperature entering valve regardless of system operating pressure. When fully closed the valve shall bypass a minimum amount of hot water to maintain dynamic control of the recirculating loop. Valve shall be NSF-61 certified for use in all domestic water systems.

C. Refer to Plumbing Fixture Schedule on plans.

PART 3 EXECUTION

3.1 INSTALLATION

A. Install in accordance with manufacturer's instructions.

B. Set floor drains, roof drains, trench drains and cleanouts level and plumb adjusted to finished floor elevation, roof elevation or finished wall location. Locate where serviceable. Allow minimum of 18" clearance around cleanouts for rodding. Lubricate threaded cleanout plugs with graphite and oil, teflon tape or waterproof grease. Install trap primer connections where indicated. Provide deep seal traps on floor drains and hub drains installed in mechanical rooms,

penthouses or rooms with excessive positive or negative pressure.

C. Extend cleanouts to finished floor or wall surface. Lubricate threaded cleanout plugs with mixture of graphite and linseed oil. Ensure clearance at cleanout for rotting of drainage system.

D. Encase exterior cleanout and backwater valve covers in concrete flush with grade.

E. Install sanitary backwater valve per manufacturer's instructions.

F. Install floor cleanouts at elevation to accommodate finished floor.

G. Install approved potable water protection devices on plumbing lines where contamination of domestic water may occur.

H. Pipe relief from backflow preventer to nearest drain.

I. Install water hammer arrestors complete with accessible isolation valve on hot and cold water supply piping as shown on plans. Provide access panels as required.

J. Install backflow preventers in accordance with Oklahoma requirements maintaining minimum clearance distances for servicing and testing. Provide indirect waste piping with air gap installation from relief opening to above hub drain or floor drain.

K. Install trap primer assemblies in accessible location and per manufacturer's instructions. Slope piping from trap primer towards floor drain. Coordinate power outlet with electrical contractor for electric trap primer assembly.

L. Coordinate roof hydrant installation with roofing contractor. Slope drain line from hydrant to nearest hub drain or floor sink. Install hydrant per manufacturer's recommendations.

M. Mount wall hydrants recessed in exterior wall construction with valve plug extended beyond interior side of building insulation. Slope to drain to exterior. Install so discharge is 18" min. above finished grade. Set wall box in grout or caulk and fill exterior wall penetration with insulation.

N. Equipment by others: Provide rough-in piping and make final and necessary connections as required by equipment supplier.

O. Thermostatic balancing valve: Installation of valve shall be made by qualified tradesmen. Install valve in each domestic hot water return piping branch beyond last hot water device in that branch. Provide suitable line size isolation valves, unions, and strainer as recommended by manufacturer. Provide suitable access panel as required in non-accessible ceilings and walls.

3.2 OWNER TRAINING

A. Contractor to provide factory authorized representative and/or field personnel knowledgeable with the operations, maintenance and troubleshooting of the system and/or components defined within this section for a minimum period of 1 hour.

END OF SECTION

INTENTIONALLY LEFT BLANK

SECTION 223000

PLUMBING EQUIPMENT

PART 1 GENERAL

1.1 SECTION INCLUDES

A. Water Heaters.

B. Electronic Descaler.

C. Thermal expansion tanks.

D. Circulation pumps.

1.2 RELATED REQUIREMENTS

A. Section 262702 - Equipment Wiring Systems: Electrical characteristics and wiring connections.

1.3 REFERENCE STANDARDS

A. ASME (BPV VIII, 1) - Boiler and Pressure Vessel Code, Section VIII, Division 1 - Rules for Construction of Pressure Vessels; The American Society of Mechanical Engineers; 2007.

B. UL 174 - Standard for Household Electric Storage Tank Water Heaters; Underwriters Laboratories Inc.; Current Edition, Including All Revisions.

C. UL 1453 - Standard for Electric Booster and Commercial Storage Tank Water Heaters; Underwriters Laboratories Inc.; Current Edition, Including All Revisions.

1.4 SUBMITTALS

A. Product Data:
   1. Provide dimension drawings of water heaters indicating components and connections to other equipment and piping.
   2. Provide electrical characteristics and connection requirements.

B. Shop Drawings:
   1. Indicate heat exchanger dimensions, size of tappings, and performance data.
   2. Indicate dimensions of tanks, tank lining methods, anchors, attachments, lifting points, tappings, and drains.

C. Project Record Documents: Record actual locations of components.

D. Operation and Maintenance Data: Include operation, maintenance, and inspection data, replacement part numbers and availability, and service depot location and telephone number.

E. Warranty: Submit manufacturer warranty and ensure forms have been completed in Owner's name and registered with manufacturer.

1.5 QUALITY ASSURANCE

A. Manufacturer Qualifications: Company specializing in manufacturing the type of products specified in this section, with minimum three years of documented experience.

1.6 CERTIFICATIONS

A. Products Requiring Electrical Connection: Listed and classified by Underwriters Laboratories Inc., as suitable for the purpose specified and indicated.

B. Gas Water Heaters: Certified by CSA International to ANSI Z21.10.1 or ANSI Z21.10.3, as applicable, in addition to requirements specified elsewhere.

1.7 DELIVERY, STORAGE, AND HANDLING

A. Provide temporary inlet and outlet caps. Maintain caps in place until installation.

1.8 WARRANTY

A. Refer to Bidding Requirements and Division 1 - General Requirements, for additional warranty requirements.

PART 2 PRODUCTS

2.1 COMMERCIAL GAS-FIRED WATER HEATERS – TANKLESS TYPE

A. Manufacturers:
   1. Navien Inc.: www.navien.com.
   2. Substitutions: Refer to applicable sections in Bidding Requirements and Division 1 - General Requirements.

B. Type: Type: Tankless, automatic, natural gas-fired, modulating burner with 10-1 turn down ratio, high efficiency, sealed combustion, condensing, direct vent exhaust and air intake, wall mounted. Unit shall have built-in control panel with diagnostics display. Multiple units shall be connected with communications cable from manufacturer.

C. Performance: Refer to Water Heater Schedule on plans.

D. Accessories: Provide:
   1. Temperature and Pressure Relief Valve: ASME labeled.
   2. Wall mounted support.
   3. Ball valves and unions at pipe connection points.
   4. Ready-Link Communications Cable
   5. Condensate drain neutralizer kit piped to floor sink.
   6. Coordinate 120 volt outlet for power supply with Electrical Contractor.
   7. Provide concentric vent kit.
   8. Ready-link wall mount piping manifold.
   9. Communication cable to external circulation pump.

E. Venting: PVC, CPVC or ABS combustion air intake and flue gas outlet with DWV solvent weld fittings per manufacturer's instructions.

2.2 ELECTRONIC DESCALER

A. Manufactuer:
   1. Clear Water Enviro technologies; model Scaleblaster SB-250.
   2. Substitutions: Refer to Bidding Requirements and Division 1 - General Requirements.

B. Electronic descaler to prevent calcium build-up in piping. Install unit on wall next to water heaters, coil wiring installed on cold water supply pipe to water heater per manufacturer's instructions. Coordinate 120 volt outlet for power supply with electrical contractor.

C. Refer to Plumbing Schedules on plans.

2.3 THERMAL EXPANSION TANKS

A. Manufacturers:
   1. Amtrol Inc.: www.amtrol.com.
   2. Wessel Company: www.westank.com.
   3. Substitutions: Refer to Bidding Requirements and Division 1 - General Requirements.

B. Construction: Welded steel, rated for working pressure of 125 psig, with flexible EPDM diaphragm sealed into tank, and steel legs or saddles. NSF/ANSI 61 listed for potable water.

C. Accessories: Pressure gage and air-charging fitting, tank drain; pre-charge to 40 psig.

2.4 CIRCULATION PUMPS

A. Manufacturers:
   1. ITT Bell & Gossett: www.bellgossett.com.
   2. Grundfos Pumps Corporation: www.grundfos.us.

3. Taco Inc: www.tac-hvac.com.
4. Substitutions: Refer to Bidding Requirements and Division 1 - General Requirements.

B. Type: Lead free bronze body design, wet rotor circulator with 175 psig maximum working pressure at operating temperature of 225°F continuous. Flanged connections with pump internals capable of being serviced without disturbing piping connections. The manufacturer shall certify all pump ratings. All pumps to operate without excessive noise or vibration.

C. Refer to Plumbing Schedules on plans.

PART 3 EXECUTION

3.1 INSTALLATION

A. Install plumbing equipment in accordance with manufacturer's instructions, as required by code, and complying with conditions of certification, if any. Provide accessories as required for a complete operating system.

B. Coordinate with plumbing piping and related fuel piping, gas venting, ductwork and electrical work to achieve operating system. Locate equipment and arrange plumbing piping to provide access space for servicing all components.

C. Startup and test equipment adjusting operating and safety controls for proper operation. Manufacturer's Field Service: Engage a factory-authorized service representative to inspect components, assemblies and equipment installations, including connections, and to assist in testing.

D. Provide accessories as required for a complete operating system.

E. Domestic water heaters: Pipe relief valves and drains to nearest floor drain, hub drain or floor sink. Install water heater condensate neutralizer kit per manufacturer’s recommendations.

F. Mount commercial tankless water heaters on wall. Adjust and level equipment. Coordinate mounting height with all trades on site to provide required clearance to unit.

G. Connect equipment to water and drain piping using unions or flanges and isolation valves.

H. Adjust compression tank pre-charge to scheduled minimum operating pressure prior to connecting to system.

I. Route water heater venting thru roof and terminate per manufacturer’s instructions. Maintain proper code required clearances to openings and mechanical equipment on roof.

J. Circulating pumps: Provide line sized isolating valve, balancing valve and thermometer on suction and line sized soft seated check valve and balancing isolating valve on discharge.
1. Ensure pumps operate at specified system fluid temperatures without vapor binding and cavitations, are non-overloading in parallel or individual operation, and operate within 25 percent of midpoint of published maximum efficiency curve

3.2 OWNER TRAINING

A. Contractor to provide factory authorized representative and/or field personnel knowledgeable with the operations, maintenance and troubleshooting of the system and/or components defined within this section for a minimum period of 1 hour.

END OF SECTION

INTENTIONALLY LEFT BLANK

SECTION 224000

PLUMBING FIXTURES

PART 1 GENERAL

1.1 SECTION INCLUDES

A. Water closets.

B. Lavatories.

C. Sinks.

D. Service sinks.

E. Electric water coolers.

1.2 RELATED REQUIREMENTS

A. Section 221005 - Plumbing Piping.

B. Section 221006 - Plumbing Piping Specialties.

C. Section 223000 - Plumbing Equipment.

D. Section 262702 - Equipment Wiring Systems: Electrical characteristics and wiring connections.

1.3 REFERENCE STANDARDS

A. ASHRAE Std 18 - Methods of Testing for Rating Drinking-Water Coolers with Self-Contained Mechanical Refrigeration; 2006.

B. ASME A112.6.1M - Supports for Off-the-Floor Plumbing Fixtures for Public Use; The American Society of Mechanical Engineers; 1997 (Reaffirmed 2002).

C. ASME A112.18.1 - Plumbing Supply Fittings; The American Society of Mechanical Engineers; 2005.

D. ASME A112.19.2 - Vitreous China Plumbing Fixtures and Hydraulic Requirements for Water Closets and Urinals; The American Society of Mechanical Engineers; 2008.

1.4 SUBMITTALS

A. Product Data: Provide catalog illustrations of fixtures, sizes, rough-in dimensions, utility sizes, trim, and finishes.

B. Manufacturer's Instructions: Indicate installation methods and procedures.

C. Maintenance Data: Include fixture trim exploded view and replacement parts lists.

D. Warranty: Submit manufacturer warranty and ensure forms have been completed in Owner's name and registered with manufacturer.

1.5 QUALITY ASSURANCE

A. Manufacturer Qualifications: Company specializing in manufacturing the type of products specified in this section, with minimum three years of documented experience.

1.6 REGULATORY REQUIREMENTS

A. Products Requiring Electrical Connection: Listed and classified by Underwriters Laboratories Inc., as suitable for the purpose specified and indicated.

1.7 DELIVERY, STORAGE, AND HANDLING

A. Accept fixtures on site in factory packaging. Inspect for damage.

B. Protect installed fixtures from damage by securing areas and by leaving factory packaging in place to protect fixtures and prevent use.

1.8 WARRANTY

A. Refer to applicable sections in Bidding Requirements and Division 1 - General Requirements, for additional warranty requirements.

PART 2 PRODUCTS

2.1 FLUSH VALVE WATER CLOSETS

A. Water Closet Manufacturers:
   1. American Standard Inc.: www.americanstandard.com.
   2. Kohler Company: www.kohler.com.
   3. Substitutions: Refer to applicable sections in Bidding Requirements and Division 1 - General Requirements.

B. Water Closets: Vitreous china, ASME A112.19.2, elongated rim wall hung back outlet type, siphon jet flush action, china bolt caps. Flush volume 1.6 gallons. Color white. Refer to Architectural plans for mounting heights.

C. Flush Valves: ASME A112.18.1, Exposed chrome plated, diaphragm type, complete with vacuum breaker stops and accessories. Vandal resistant stop cap. 1.6 gallon flush volume.
   1. Sensor-Operated Type: Sensor-Operated Type: Battery powered, solenoid operator, infrared sensor and over-ride push button.

D. Flush Valve Manufacturers:
   a. Sloan Valve Company: www.sloanvalve.com.
   b. Substitutions: Refer to applicable sections in Bidding Requirements and Division 1 - General Requirements.

E. Seats:
   1. Manufacturers:
      a. Bemis Manufacturing Company: www.bemismfg.com.
      b. Kohler Company: www.kohler.com.
      c. Comfort Seats: www.comfort-seat.com.
      d. Substitutions: Refer to applicable sections in Bidding Requirements and Division 1 - General Requirements.
   2. Solid white plastic, open front, extended back, self-sustaining hinge, external check hinge with stainless steel posts, without cover.

F. Water Closet Carriers: Wall hung
   1. Manufacturers:
      a. Wade Drains: www.wadedrains.com.
      b. Watts Water Technologies: www.watts.com.
      c. Zurn Industries, Inc.: www.zurn.com.
      d. Substitutions: Refer to applicable sections in Bidding Requirements and Division 1 - General Requirements.
   2. ASME A112.6.1M; adjustable cast iron frame, integral drain hub and vent, adjustable spud, lugs for floor and wall attachment, threaded fixture studs with nuts and washers**.**

G. Refer to Plumbing Fixture Schedule on plans.

2.2 LAVATORY STATION

A. Lavatory Manufacturers:
   1. Bradley Corporation: www.bradleycorp.com.
   2. Sloan Valve Company: www.sloanvalve.com.
   3. Substitutions: Refer to applicable sections in Bidding Requirements and Division 1 - General Requirements.

B. 2-station unit: stone resin based solid surface top, stainless steel frame supports and access panels, grid strainer, waste with single P-trap. Center-Shank drillings for two faucets. No soap dispenser. Thermostatic mixing valve assembly with stops and hoses. Unit meets ANSI and ADA accessibility requirements. Refer to Architectural plans for mounting heights.

1. All color options to be available for selection by Architect.

C. Faucet Manufacturers:
   1. Sloan Valve Company: www.sloanvalve.com.
   2. Bradley Corporation: www.bradleycorp.com.
   3. Substitutions: Refer to applicable sections in Bidding Requirements and Division 1 - General Requirements.

D. Faucet: ASME A112.18.1; infrared sensor operated, battery powered, chrome plated, pedestal with base plate, below deck thermostatic mixing valve, 1.5 GPM laminar flow, ADA compliant.
   1. Provide Commercial grade quarter turn supply stops with removable handle or loose key.

E. Refer to Plumbing Fixture Schedule on plans.

2.3 SINKS

A. Sink Manufacturers:
   1. Elkay Manufacturing: www.elkayusa.com.
   2. Advance Tabco: www.advancetabco.com.
   3. Just Manufacturing Company: www.justmfg.com.
   4. Substitutions: Refer to applicable sections in Bidding Requirements and Division 1 - General Requirements.

B. Classroom Sink Package: Single compartment bowl at 6” deep, ASME A112.19.3; 18 gage thick, Type 304 stainless steel, self rimming and undercoated, with each side and back ledge drilled for trim, includes right side bubbler, left side lever handle and gooseneck faucet at back.
   1. Lever handle shall be located on left side, centered on sink bowl. Do not place lever at front left corner of bowl.
   2. Bubbler with flexible mouth guard and push button.

C. Laboratory prep sink: Single compartment bowl, ASME A112.19.3; 18 gage thick, Type 304 stainless steel, self rimming and undercoated, with back ledge drilled for trim. Faucet shall have gooseneck spout and ADA complaint lever handles.

D. Supply Faucet Manufacturers:
   1. Chicago Faucets: www.chicagofaucets.com.
   2. Elkay Manufacturing: www.elkay.com.
   3. T & S Brass: www.tsbrass.com.
   4. Substitutions: Refer to applicable sections in Bidding Requirements and Division 1 - General Requirements.

E. Accessories for sinks:
   1. Commercial grade quarter turn supply stops with removable handle or loose key.
   2. Supply lines: rigid chrome plated or flexible stainless steel.
   3. Provide below deck thermostatic mixing valve (ASSE 1070) at location indicated on plans.
   4. Drain: 3-1/2 inch stainless steel crumb cup and offset tailpiece.
   5. Chrome plated 17 gage brass P-trap with clean-out plug and arm with escutcheon.

F. Refer to Plumbing Fixture Schedule on plans.

2.4 SERVICE SINKS

A. Service Sink Manufacturers:
   1. Fiat Products: www.fiat.ca.
   2. Florestone, Inc: www.florestone.com.
   3. Substitutions: Refer to applicable sections in Bidding Requirements and Division 1 - General Requirements.

B. Bowl: 24 by 24 by 12 inch high, square type, molded stone, floor mounted, 6” drop front with stainless steel threshold and stainless steel flat strainer.

C. Sink Faucet Manufacturers:
   1. Fiat Products: www.fiat.ca.

2. Chicago Faucets: www.chicagofaucets.com.
3. T & S Brass: www.tsbrass.com.
4. Substitutions: Refer to applicable sections in Bidding Requirements and Division 1 - General Requirements.

D. Trim: ASME A112.18.1 exposed chrome plated wall type supply with lever handles, adjustable spout wall brace, vacuum breaker, hose end spout, pail hook, integral screwdriver stops with covering caps and wall flanges.
1. Provide hose with wall bracket, 3-position mop bracket and stainless steel wall guards.

E. Refer to Plumbing Fixture Schedule on plans.

2.5 ELECTRIC WATER COOLERS

A. Electric Water Cooler Manufacturers:
1. Elkay Manufacturing Company: www.elkay.com.
2. Halsey-Taylor: www.halseytaylor.com.
3. Substitutions: Refer to applicable sections in Bidding Requirements and Division 1 - General Requirements.

B. Water Cooler: Electric 120/60/1, mechanically refrigerated; wall mounted, handicapped accessible, stainless steel cabinet, vandal-resistant construction, lead free design, water filter, push button operation.
1. Dual height unit with water bottle filling station on lower unit, ADA installation.
2. Sensor operated bottle fill station.
3. Provide cane apron on upper unit.
4. Refer to Architectural plans for mounting heights.

C. Refer to Plumbing Fixture Schedule on plans.

PART 3 EXECUTION

3.1 EXAMINATION

A. Confirm that millwork is constructed with adequate provision for the installation of counter top lavatories and sinks.

3.2 PREPARATION

A. Rough-in fixture piping connections in accordance with minimum sizes indicated in fixture rough-in schedule for particular fixtures.

3.3 INSTALLATION

A. Install plumbing fixtures in accordance with manufacturer’s instructions. Set level and plumb. Secure in place to counters, floors and walls providing solid bearing and secure mounting. Bolt fixture carriers to floor and wall. Secure rough-in fixture piping to prevent movement of exposed piping. Cover exposed water closet bolts with bolt covers..

B. Install each fixture with trap, easily removable for servicing and cleaning. Install fixture stops in readily accessible location for servicing.

C. Provide chrome plated rigid or stainless steel flexible supplies to fixtures with commercial grade quarter-turn loose key or removable handle stops, reducers, and escutcheons.

D. Set floor mounted water closets, floor mounted service sinks; counter mounted lavatories and sinks; lavatory and sink faucets and drains with full setting bed of flexible non-staining plumber's putty.

E. Seal fixtures to wall and floor surfaces with sealant as specified in Division 07, color to match fixture.

F. Provide unions at water connections and PVC P-traps for electric water coolers.

G. Cover pipe penetrations with escutcheons. Exposed traps, stops, piping and escutcheons to be chrome plated brass and incased with ADA compliant covers.

H. Provide adjustable support bracket with pipe clamps for fastening to wall framing to secure piping stub outs at fixtures. Piping stub outs shall be type L copper.

3.4 INTERFACE WITH WORK OF OTHER SECTIONS

A. Review millwork shop drawings. Confirm location and size of fixtures and openings before rough-in and installation.

3.5 ADJUSTING

A. Adjust stops or valves for intended water flow rate to fixtures without splashing, noise, or overflow.

B. Test fixtures to demonstrate proper operation. Replace malfunctioning units or components.

3.6 CLEANING

A. Clean plumbing fixtures and equipment.

3.7 PROTECTION

A. Protect installed products from damage due to subsequent construction operations.

B. Do not permit use of fixtures by construction personnel.

C. Repair or replace damaged products before Date of Substantial Completion.

END OF SECTION

INTENTIONALLY LEFT BLANK

SECTION 230500

COMMON WORK RESULTS FOR HVAC

PART 1 GENERAL

1.1 RELATED WORK

A . Section 230513 - Common Motor Requirements for HVAC Equipment.

B . Section 230593 - Testing, Adjusting, and Balancing for HVAC.

C . Section 233300 - Air Duct Accessories.

1.2 REFERENCE

A . Applicable provisions of Division 1 govern work under this section.

1.3 REFERENCE STANDARDS

A . Abbreviations of standards organizations referenced in other sections are as follows:

1.	AABC	Associated Air Balance Council.
2.	ADC	Air Diffusion Council.
3.	AGA	American Gas Association.
4.	AMCA	Air Movement and Control Association.
5.	ANSI	American National Standards Institute.
6.	ARI	Air Conditioning and Refrigeration Institute.
7.	ASHRAE	American Society of Heating, Refrigerating and Air Conditioning Engineers.
8.	ASME	American Society of Mechanical Engineers.
9.	ASTM	American Society for Testing and Materials.
10.	EPA	Environmental Protection Agency.
11.	GAMA	Gas Appliance Manufacturers Association.
12.	IEEE	Institute of Electrical and Electronics Engineers.
13.	ISA	Instrument Society of America.
14.	MCA	Mechanical Contractors Association.
15.	MICA	Midwest Insulation Contractors Association.
16.	NBS	National Bureau of Standards.
17.	NEBB	National Environmental Balancing Bureau.
18.	NEC	National Electric Code.
19.	NEMA	National Electrical Manufacturers Association.
20.	NFPA	National Fire Protection Association.
21.	SMACNA	Sheet Metal and Air Conditioning Contractors' National Association. Inc.
22.	UL	Underwriters Laboratories Inc.
23.	ASTM E814	Standard Test Method for Fire Tests of Through-Penetration Fire Stops.
24.	ASTM E84	Standard Test Method for Surface Burning Characteristics of Building Materials.
25.	UL1479	Fire Tests of Through-Penetration Firestops.
26.	UL723	Surface Burning Characteristics of Building Materials.

1.4 QUALITY ASSURANCE

A . Where equipment or accessories are used which differ in arrangement, configuration, dimensions, ratings, or engineering parameters from those indicated on the contract documents, the Contractor is responsible for all costs involved in integrating the equipment or accessories into the system and for obtaining the performance from the system into which these items are placed. This may include changes found necessary during the testing, adjusting, and balancing phase of the project.

1.5 CONTINUITY OF EXISTING SERVICES

A . Do not interrupt or change existing services without prior written approval from the Owner Project Representative. When interruption is required, coordinate the down-time with the user agency to minimize disruption to their activities. Unless specifically stated, all work involved in interrupting or changing existing services is to be done during normal working hours.

1.6 PROTECTION OF FINISHED SURFACES

A . Refer to applicable sections in Bidding Requirements and Division 1 - General Requirements.

B . Furnish one can of touch-up paint for each different color factory finish which is to be the final finished surface of the product. Deliver touch-up paint with other "loose and detachable parts" as covered in the General Requirements.

1.7 SLEEVES AND OPENINGS

A . Refer to applicable sections in Bidding Requirements and Division 1 - General Requirements.

1.8 SEALING AND FIRESTOPPING

A . Sealing and firestopping of sleeves/openings between ductwork, piping, etc. and the sleeve, structural or partition opening shall be the responsibility of the Contractor whose work penetrates the opening. The Contractor responsible shall hire individuals skilled in such work to do the sealing and fireproofing. These individuals hired shall normally and routinely be employed in the sealing and fireproofing occupation.

B . Firestopping shall be UL listed and labeled for the actual application.

1.9 SUBMITTALS

A . Submittals must be reviewed, and approved by submitting Contractor.

B . Submit for all equipment and systems as indicated in the respective specification sections, marking each submittal with that specification section number. Mark general catalog sheets and drawings to indicate specific items being submitted and proper identification of equipment by name and/or number, as indicated in the contract documents.

C . Before submitting electrically powered equipment, verify that the electrical power and control requirements for the equipment are in agreement with the motor starter schedule on the electrical drawings. Include a statement on the shop drawing transmittal to the Engineer that the equipment submitted and the motor starter schedule is in agreement or indicate any discrepancies. See related comments in Section 230513 - Common Motor Requirements for HVAC Equipment in Part 1 under Electrical Coordination.

D . Include wiring diagrams of electrically powered equipment.

E . Submit all shop drawings in PDF format with paper copies.

F . Submit sufficient quantities of printed shop drawings to allow the following distribution:

1.	Operating and Maintenance Manuals	2 copies.
2.	Testing, Adjusting and Balancing Contractor	1 copy.
3.	Owner	1 copy.
4.	Architect/Engineer	1 copy.

1.10 OFF SITE STORAGE

A . Prior approval by Owner and the Architect/Engineer will be needed. The Contractor shall carry insurance for full value, with Owner as beneficiary for consideration of offsite materials storage.

B . Generally, ductwork, metal for making ductwork, duct lining, sleeves, and similar rough in material will not be accepted for offsite storage. For material that can be stored off site, no material will be accepted for offsite storage unless shop drawings for that material have been approved.

1.11 REQUEST AND CERTIFICATION FOR PAYMENT

A . Within 10 days after Notice to Proceed, the successful bidder will submit to the Owner Project Representative in a form prescribed below and by the General Conditions of the Contract - Scheduling and Coordination of Work, Reports, Records and Data, Payments to Contractor, a cost breakdown of the proposed values for work performed which, if approved by Owner, will become the basis for construction progress and monthly payments. The cost breakdown items shall reflect actual work progress stages as closely as feasible.

B . In addition, if payment is requested for approved off-site stored material, then that material shall be listed as a line item in the request and certification for payment cost breakdown.

1.12 CERTIFICATES AND INSPECTIONS

A . Refer also to applicable sections in Bidding Requirements and Division 1 - General Requirements.

B . Obtain and pay for all required State installation inspections except those provided by the Architect/Engineer. Deliver originals of these certificates to the Division Project Representative. Include copies of the certificates in the Operating and Maintenance Instructions.

1.13 OPERATING AND MAINTENANCE INSTRUCTIONS

A . Assemble material in three ring or post binders, using an index at the front of each volume and tabs for each system or type of equipment. In addition to the data indicated in the General Requirements, include the following information:
1. Copies of all approved shop drawings.
2. Manufacturer's wiring diagrams for electrically powered equipment.
3. Records of tests performed to certify compliance with system requirements.
4. Certificates of inspection by regulatory agencies.
5. Parts list for manufactured equipment.
6. Lubrication instructions, including list/frequency of lubrication done during construction.
7. Warranties.
8. Additional information as indicated in the technical specification sections.

B . Provide a PDF file copy of all Operation and Maintenance (O&M) Manuals.

1.14 OWNER TRAINING

A . Instruct personnel in the proper operation and maintenance of systems and equipment provided as part of this project. Include not less than 4 hours of instruction, using the Operating and Maintenance manuals during this instruction. Demonstrate startup and shutdown procedures for all equipment. All training to be during normal working hours.

1.15 RECORD DRAWINGS

A . Refer to applicable sections in Bidding Requirements and Division 1 - General Requirements.

B . In addition to the data indicated in the General Requirements, maintain temperature control record drawings on originals prepared by the installing contractor/subcontractor. Include copies of these record drawings with the Operating and Maintenance manuals.

PART 2 PRODUCTS

2.1 ACCESS PANELS AND DOORS

A . Lay-in Ceilings:
1. Removable lay-in ceiling tiles in 2 X 2 foot or 2 X 4 foot configuration provided under Division 9 are sufficient; no additional access provisions are required unless specifically indicated.

B . Plaster Walls and Ceilings:
1. 16 gauge frame with not less than a 20 gauge hinged door panel, prime coated steel for general applications, stainless steel for use in toilets, showers, and similar wet areas, concealed hinges, screwdriver operated cam latch for general applications, key lock for use in public areas, UL listed for use in fire rated partitions if required by the application. Use the largest size access opening possible, consistent with the space and the equipment needing service; minimum size is 12" by 12".

2.2 IDENTIFICATION

A . Stencils:
1. Not less than 1 inch high letters/numbers for marking pipe and equipment.

B . Engraved Name Plates:
1. White letters on a black background, 1/16 inch thick plastic laminate, beveled edges, screw mounting, Setonply Style 2060 by Seton Name Plate Company or Emedolite- Style EIP by EMED Co., or equal by Marking Services, or W. H. Brady.

2.3 SEALING AND FIRESTOPPING

A . Non-Rated Penetrations:
1. Duct Penetrations:
a. Annular space between duct (with or without insulation) and the non-rated partition or floor opening shall not be larger than 2". Where existing openings have an annular space larger than 2", the space shall be patched to match existing construction to within 2" around the duct.
b. Where shown or specified, pack annular space with fiberglass batt insulation or mineral wool insulation. Provide 4" sheet metal escutcheon around duct on both sides of partition or floor to cover annular space.

PART 3 EXECUTION

3.1 BUILDING ACCESS

A . Arrange for the necessary openings in the building to allow for admittance of all apparatus. When the building access was not previously arranged and must be provided by this Contractor, restore any opening to its original condition after the apparatus has been brought into the building.

3.2 EQUIPMENT ACCESS

A . Install all piping, conduit, ductwork, and accessories to permit access to equipment for maintenance and service. Coordinate the exact location of wall and ceiling access panels and doors with the General Contractor, making sure that access is available for all equipment and specialties. Access doors in general construction are to be furnished by the Mechanical Contractor and installed by the General Contractor.

B . Provide color coded thumb tacks or screws, depending on the surface, for use in accessible ceilings which do not require access panels.

3.3 COORDINATION

A . Verify that all devices are compatible for the surfaces on which they will be used. This includes, but is not limited to, diffusers, register, grilles, and recessed or semi recessed heating and/or cooling terminal units installed in/on architectural surfaces.

B . Coordinate all work with other Contractors prior to installation. Any installed work that is not coordinated and that interferes with other Contractor's work shall be removed or relocated at the installing Contractor's expense.

C . Cooperate with the test and balance agency in ensuring Section 230593 specification compliance. Verify system completion to the test and balance agency (clean filters, duct systems cleaned, controls adjusted and calibrated, controls cycled through their sequences, etc.), ready for testing, adjusting and balancing work. Install dampers, gauges, temperature controls, etc., required for functional and balanced systems. Demonstrate the starting, interlocking and control features of each system so the test and balance agency can perform its work.

3.4 IDENTIFICATION

A . Identify equipment in mechanical equipment rooms by stenciling equipment number and service with one coat of black enamel against a light background or white enamel against a dark background. Use a primer where necessary for proper paint adhesion. Do not label equipment such as cabinet heaters and ceiling fans in occupied spaces.

B . Where stenciling is not appropriate for equipment identification, engraved name plates may be used.

C . Use engraved name plates to identify control equipment.

3.5 SLEEVES

A . Duct Sleeves:
1. Duct sleeves are not required in non-rated partitions or floors.
2. Provide sleeve required for fire dampers in fire-rated partitions and floors. Reference fire damper details on drawings.

3.6 SEALING AND FIRESTOPPING

A . Fire and/or Smoke Rated Penetrations:
1. Install approved product in accordance with the manufacturer's instructions where pipes penetrate a fire/smoke rated surface. When pipe is insulated, use a product which maintains the integrity of the insulation and vapor barrier. Provide a UL label at each penetration.

B . Non-Rated Partitions:
1. At all interior partitions and exterior walls, pipe penetrations are required to be sealed. Apply sealant to both sides of the penetration in such a manner that the annular space between the pipe sleeve or cored opening and the pipe or insulation is completely blocked.
2. Duct penetrations through non-rated partitions shall require sheet metal escutcheons with fiberglass or mineral wool insulation fill for spaces that include janitor closets, toilet rooms, mechanical rooms, conference rooms, private consultation rooms, and where noted on drawings elsewhere.

3.7 OWNER TRAINING

A . All training provided for Owner shall comply with the format, general content requirements and submission guidelines specified.

END OF SECTION

INTENTIONALLY LEFT BLANK

SECTION 230513

COMMON MOTOR REQUIREMENTS FOR HVAC EQUIPMENT

PART 1 GENERAL

1.1 SCOPE

A . This section includes requirements for single and three phase motors that are used with equipment specified in other sections. Included are the following topics:
1. PART 1 – GENERAL.
    a. Scope.
    b. Related Work.
    c. Reference.
    d. Reference Standards.
    e. Quality Assurance.
    f. Shop Drawings.
    g. Operating and Maintenance Data.
    h. Electrical Coordination.
    i. Product Criteria.
2. PART 2 – PRODUCTS.
    a. Three Phase, Single Speed Motors.
    b. Single Phase, Single Speed Motors.
3. PART 3 – EXECUTION.
    a. Installation.

1.2 RELATED WORK

A . Division 26 - Electrical.

1.3 REFERENCE

A . Applicable provisions of Division 1 govern work under this section.

1.4 REFERENCE STANDARDS

A . ANSI/IEEE 112 Test Procedure for Polyphase Induction Motors and Generators.

B . ANSI/NEMA MG-1 Motors and Generators.

C . ANSI/NFPA 70 National Electrical Code.

1.5 QUALITY ASSURANCE

A . Refer to applicable sections in Bidding Requirements and Division 1 - General Requirements.

1.6 SHOP DRAWINGS

A . Include with the equipment which the motor drives the following motor information: Motor manufacturer, horsepower, voltage, phase, hertz, rpm, and full load efficiency. Include project wiring diagrams prepared by the contractor specifically for this work.

1.7 OPERATION AND MAINTENANCE DATA

A . All operations and maintenance data shall comply with the submission and content requirements specified.

1.8 ELECTRICAL COORDINATION

A . All starters, overload relay heater coils, disconnect switches and fuses, relays, wire, conduit, pushbuttons, pilot lights, and other devices required for the control of motors or electrical equipment are furnished and installed by the Electrical Contractor, except as specifically noted elsewhere in this division of specifications.

B . Electrical drawings and/or specifications show number and horsepower rating of all motors furnished by this Contractor, together with their actuating devices if these devices are furnished by the Electrical Contractor. Should any discrepancy in size, horsepower rating, electrical characteristics or means of control be found for any motor or other electrical equipment after contracts are awarded, Contractor is to immediately notify the Architect/Engineer of such discrepancy. Costs involved in any changes required due to equipment substitutions initiated by this contractor will be the responsibility of this contractor. See related comments in Section 230500 - Common Work Results for HVAC, under Shop Drawings.

C . Electrical Contractor will provide all power wiring and control wiring, except temperature control wiring.

D . Furnish project specific wiring diagrams to Electrical Contractor for all equipment and devices furnished by this Contractor and indicated to be wired by the Electrical Contractor.

1.9 PRODUCT CRITERIA

A . Motors to conform to all applicable requirements of NEMA, IEEE, ANSI, and NEC standards and shall be listed by U.L. for the service specified.

B . Select motors for conditions in which they will be required to perform; i.e., general purpose, standard duty, high torque or any other special type as required by the equipment or motor manufacturer's recommendations.

C . Furnish motors for starting in accordance with utility requirements and compatible with starters as specified.

PART 2 PRODUCTS

2.1 THREE PHASE, SINGLE SPEED MOTORS

A . Use NEMA rated, three phase, 60 hertz motors for all motors 1/2 HP and larger unless specifically indicated.

B . Use NEMA general purpose, continuous duty, Design B, normal starting torque, T-frame or U-frame motors with Class B or better insulation unless the manufacturer of the equipment on which the motor is being used has different requirements. Use open drip-proof motors unless totally enclosed fan-cooled motors are specified in the equipment sections.

C . Use grease lubricated anti-friction ball bearings with housings equipped with plugged/capped provision for relubrication, rated for minimum AFBMA 9, L-10 life of 20,000 hours. Calculate bearing load with NEMA minimum V-belt pulley with belt center line at the end of NEMA standard shaft extension. Stamp bearing sizes on nameplate.

D . All open drip-proof motors to have a 1.15 service factor. Other motor types may have minimum 1.0 service factors.

E . All motors 1 HP and larger, except specially wound motors and inline pump motors 56 frame and smaller, to be high efficiency design with full load efficiencies which meet or exceed the values listed below when tested in accordance with NEMA MG 1.

FULL LOAD NOMINAL MOTOR EFFICIENCY BY MOTOR SIZE AND SPEED

MOTOR HP	-----Open Drip-Proof Motors------ -------Nominal Motor Speed------- 1200 rpm	1800 rpm	3600 rpm
1	82.5	85.5	77.0
1-1/2	86.5	86.5	84.0
2	87.5	86.5	85.5
3	88.5	89.5	85.5
5	89.5	89.5	86.5
7-1/2	90.2	91.0	88.5

MOTOR HP	----Totally Enclosed Fan-Cooled---- -------Nominal Motor Speed------ 1200 rpm	1800 rpm	3600 rpm
1	82.5	85.5	77.0
1-1/2	87.5	86.5	84.0
2	88.5	86.5	85.5
3	89.5	89.5	86.5
5	89.5	89.5	88.5
7-1/2	91.0	91.7	89.5

2.2 SINGLE PHASE, SINGLE SPEED MOTORS

A . Use NEMA rated 115 volt, single phase, 60 hertz motors for all motors 1/3 HP and smaller.

B . Use permanent split capacitor or capacitor start, induction run motors equipped with permanently lubricated and sealed ball or sleeve bearings and Class A insulation. Service factor to be not less than 1.35.

PART 3 EXECUTION

3.1 INSTALLATION

A . Mount motors on a rigid base designed to accept a motor, using shims if required under each mounting foot to get a secure installation.

B . When motor will be connected to the driven device by means of a belt drive, mount sheaves on the appropriate shafts in accordance with the manufacturer's instructions. Use a straight edge to check alignment of the sheaves; reposition sheaves as necessary so that the straight edge contacts both sheave faces squarely. After sheaves are aligned, loosen the adjustable motor base so that the belt(s) can be added and tighten the base so that the belt tension is in accordance with the drive manufacturer's recommendations. Frequently recheck belt tension and adjust if necessary during the first day of operation and again after 80 hours of operation.

C . Verify the proper rotation of each three-phase motor as it is being wired or before the motor is energized for any reason.

D . Lubricate all motors requiring lubrication. Record lubrication material used and the frequency of use. Include this information in the maintenance manuals.

END OF SECTION

INTENTIONALLY LEFT BLANK

SECTION 230548

VIBRATION AND SEISMIC CONTROLS FOR HVAC PIPING AND EQUIPMENT

PART 1 GENERAL

1.1 SCOPE

A . This section includes specifications for vibration isolation material for equipment, piping systems, and duct systems. Included are the following topics:
1. PART 1 – GENERAL.
    a. Scope.
    b. Related Work.
    c. Reference.
    d. Quality Assurance.
    e. Design Criteria.
    f. Shop Drawings.
2. PART 2 – PRODUCTS.
    a. Materials.
    b. Type 5: Spring Hanger with Neoprene.
3. PART 3 – EXECUTION.
    a. Installation.

1.2 RELATED WORK

A . Section 233400 - HVAC Fans.

1.3 REFERENCE

A . Applicable provisions of Division 1 govern work under this section.

1.4 QUALITY ASSURANCE

A . Refer to applicable sections in Bidding Requirements and Division 1 - General Requirements.

1.5 DESIGN CRITERIA

A . Isolate all motor driven mechanical equipment from the building structure and from the systems which they serve to prevent equipment vibrations from being transmitted to the structure.

1.6 SHOP DRAWINGS

A . Include isolator type and materials of construction.

PART 2 PRODUCTS

2.1 MATERIALS

A . Use materials that will retain their isolation characteristics for the life of the equipment served. Use industrial grade neoprene for elastomeric materials.

2.2 TYPE 5: SPRING HANGER WITH NEOPRENE

A . Vibration hanger with a steel spring and 0.3" deflection neoprene element in series. Use neoprene element molded with a rod isolation bushing that passes through the hanger box. Select spring diameters and size hanger box lower holes large enough to permit the hanger rod to swing through a 30 degree arc before contacting the hole and short circuiting the spring. Select springs so they have a minimum additional travel to solid equal to 50% of the rated deflection.

PART 3 EXECUTION

3.1 INSTALLATION

A . Install vibration isolation devices for motor driven equipment in accordance with the manufacturer's installation instructions. Provide isolation for each suspended furnace.

B . Install flexible fabric duct connections at inlets and outlets of furnaces, rooftop units, and exhaust fans.

END OF SECTION

SECTION 230593

TESTING, ADJUSTING, AND BALANCING FOR HVAC

PART 1 GENERAL

1.1 SCOPE

A . This section includes air and water testing, adjusting and balancing for the entire project. Included are the following topics:
1. PART 1 – GENERAL.
   a. Scope.
   b. Related Work.
   c. Reference.
   d. Reference Standards.
   e. Description.
   f. Quality Assurance.
   g. Submittals.
2. PART 2 – PRODUCTS.
   a. Instrumentation.
3. PART 3 – EXECUTION.
   a. Preliminary Procedures.
   b. Performing Testing, Adjusting and Balancing.
   c. Deficiencies.

1.2 RELATED WORK

A . Section 230500 - Common Work Results for HVAC.

B . Section 230700 - HVAC Insulation.

1.3 REFERENCE

A . Applicable provisions of the General Conditions, Supplementary General Conditions and General Requirements in Division 1 govern work under this section.

1.4 REFERENCE STANDARDS

A . AABC National Standards for Total System Balance, Sixth Edition, 2002.

B . ASHRAE ASHRAE Handbook, 2007 HVAC Applications, Chapter 37, Testing Adjusting and Balancing.

C . NEBB Procedural Standards for Testing Adjusting Balancing of Environmental Systems, Seventh Edition, 2005.

1.5 DESCRIPTION

A . The Contractor will separately contract with an independent test and balance agency to perform all testing, adjusting, and balancing of air systems required for this project. Work related to the testing, adjusting, and balancing that must be performed by the installing mechanical contractor is specified in other section of these specifications.

B . Provide total mechanical systems testing, adjusting and balancing. Requirements include the balance of air distribution, adjustment of new and existing systems and equipment to provide design requirements indicated on the drawings, electrical measurement and verification of performance of all mechanical equipment, all in accordance with standards published by AABC or NEBB.

C . Test, adjust and balance all air systems so that each room, piece of equipment or terminal device meets the design requirements indicated on the drawings and in the specifications.

D . Accomplish testing, adjusting and balancing work in a timely manner that allows partial occupancy of major buildings, occupancy of one building when the project involves many buildings, and completion of the entire project in the time stated in the Instruction to Bidders and in accordance with the completion schedule established for this project.

E . Verify that provisions are being made to accomplish the specified testing, adjusting and balancing work. If problems are found, handle as specified in Part 3 under Deficiencies.

1.6 QUALITY ASSURANCE

A . Qualifications:
1. An independent Firm specializing in the Testing and Balancing of HVAC systems for a minimum of 3 years. A Firm not engaged in the commerce of furnishing or providing equipment or material generally related to HVAC work other than specifically related to installing Testing and Balancing components necessary for work in this section such as, but not limited to sheaves, pulleys, and balancing dampers.
2. A certified member of AABC or certified by NEBB in the specific area of work performed. Maintain certification for the entire duration of the project. If certification of firm or any staff performing work is terminated or expires during the duration of the project, contact Owner immediately.
3. Technicians on this project must have satisfactorily completed work on a minimum of (3) three projects of at least 50% in size, and of similar complexity.
4. Submit Qualifications of firm and project staff to Owner upon requested.

1.7 SUBMITTALS

A . See Related Work in this section.

B . Submit testing, adjusting and balancing reports bearing the seal and signature of the NEBB or AABC Certified Test and Balance Supervisor. The reports certify that the systems have been tested, adjusted and balanced in accordance with the referenced standards; are an accurate representation of how the systems have been installed and are operating; and are an accurate record of all final quantities measured to establish normal operating values of the systems.

C . Submission:
1. Distribute electronic copies of the Report to the Contractor, the Lead Contractor, the Owner, and the Prime Architect/Engineer.

D . Enter a RFI, with a copy of the Testing and Balancing Report Summary as an upload, indicating that the Testing and Balancing Report is posted on the Overview page and requesting review of the report.
1. Format: Cover page identifying project name, project number and descriptive title of contents. Divide the contents of the report into the below listed divisions:
   a. General Information.
   b. Summary.
   c. Air Systems.
2. Contents: Provide the following minimum information, forms and data:
   a. General Information: Inside cover sheet identifying Test and Balance Agency, Contractor, Architect, Engineer, Project Name and Project Number. Include addresses, contact names and telephone numbers. Also include a certification sheet containing the seal and signature of the Test and Balance Supervisor.
   b. Summary: Provide summary sheet describing mechanical system deficiencies. Describe objectionable noise or drafts found during testing, adjusting and balancing. Provide recommendations for correcting unsatisfactory performances and indicate whether modifications required are within the scope of the contract, are design related or installation related. List instrumentation used during testing, adjusting and balancing procedures.
   c. The remainder of the report to contain the appropriate standard NEBB or AABC forms for each respective item and system. Fill out forms completely. Where information cannot be obtained or is not applicable indicate same.

PART 2 PRODUCTS

2.1 INSTRUMENTATION

A . Provide all required instrumentation to obtain proper measurements. Application of instruments and accuracy of instruments and measurements to be in accordance with the requirements of NEBB or AABC Standards and instrument manufacturer's specifications.

B . All instruments used for measurements shall be accurate, and calibration histories for each instrument to be available for examination by Owner upon request. Calibration and maintenance of all instruments to be in accordance with the requirements of NEBB or AABC Standards

PART 3 EXECUTION

3.1 PRELIMINARY PROCEDURES

A . Review preconstruction meeting report, applicable construction bulletins, applicable change orders, and approved shop drawings of equipment, outlets/inlets and temperature controls.

B . Check filters for cleanliness, dampers for correct positioning, equipment for proper rotation and belt tension, and temperature controls for completion.

C . Notify Owner's Project Representative on a daily basis during balancing. Identify deficiencies preventing completion of testing, adjusting and balancing procedures. Do not proceed until systems are fully operational with all components necessary for complete testing, adjusting and balancing. Installing Contractors are required to provide personnel to check and verify system completion, readiness for balancing and assist Balancing Agency in providing specified system performance.

3.2 PERFORMING TESTING, ADJUSTING AND BALANCING

A . Perform testing, adjusting and balancing procedures on each system identified, in accordance with the detailed procedures outlined in the referenced standards except as may be modified below.

B . Unless specifically instructed in writing, all work in this specification section is to be performed during the normal workday.

C . In areas containing ceilings, remove ceiling tile to accomplish balancing work; replace tile when work is complete and provide new tile for any tile that are damaged by this procedure. If the ceiling construction is such that access panels are required for the work of this section and the panels have not been provided, inform the Owner's Project Representative.

D . Cut insulation for installation of test probes to the minimum extent necessary for adequate performance of procedures. Patch using materials identical to those removed, maintaining vapor barrier integrity and pressure rating of systems.

E . In air systems employing filters, blank off sufficient filter area to simulate a pressure drop that is midway between that of a clean filter and that of a dirty filter.

F . Measure and record system measurements at the fan to determine total flow. Adjust equipment as required to yield specified total flow at terminals. Proceed taking measurements in mains and branches as required for final terminal balancing. Perform terminal balancing to specified flows balancing branch dampers.

G . Measure and record static air pressure conditions across fans, coils and filters. Indicate in report if cooling coil measurements were made on a wet or dry coil and if filter measurements were made on a clean or dirty filter. Spot check static air pressure conditions directly ahead of terminal units.

H . Adjust outside air, return air and relief air dampers for design conditions at both the minimum and maximum settings and record both sets of data. Balance modulating dampers at extreme conditions and record both sets of data. Adjust register, grille and diffuser vanes and

accessories to achieve proper air distribution patterns and uniform space temperatures free from objectionable noise and drafts within the capabilities of the installed system.

I . Provide fan and motor drive sheave adjustments necessary to obtain design performance. Provide drive changes specifically noted on drawings, if any. If work of this section indicates that any drive or motor is inadequate for the application, advise the Owner's Project Representative by giving the representative properly sized motor/drive information (in accordance with manufacturers original service factor and installed motor horsepower requirements); Confirm any change will keep the duct/piping system within its design limitations with respect to speed of the device and pressure classification of the distribution system. Required motor/drive changes not specifically noted on drawings or in specifications will be considered an extra cost and will require an itemized cost breakdown submitted to Owner's Project Representative. Prior authorization is needed before this work is started.

J . Final air system measurements to be within the following range of specified cfm:

1.	Fans	0% to +10%.
2.	Supply grilles, registers, diffusers	0% to +10%.
3.	Return/exhaust grilles, registers	0% to -10%.

K . Contact the Temperature Control Contractor for assistance in operation and adjustment of controls during testing, adjusting and balancing procedures. Cycle controls and verify proper operation and setpoints. Include in report description of temperature control operation and any deficiencies found.

L . Permanently mark equipment settings, including damper positions, control settings, and similar devices allowing settings to be restored. Set and lock memory stops.

M . Leave systems in proper working order, replacing belt guards, closing access doors and electrical boxes, and restoring temperature controls to normal operating settings.

N . Coordinate furnace and rooftop unit minimum outside air set points with the Temperature Control Contractor.

3.3 DEFICIENCIES

A . Mechanical Contractor to correct any installation deficiencies found by the test and balance agency that were specified and/or shown on the Contract Documents to be performed as part of that division of work. Test and balance agency will notify the Owner's Project Representative of these items and instructions will be issued to the Mechanical Contractor for correction of the deficient work. All corrective work to be done at no cost to the Owner. Retest mechanical systems, equipment, and devices once corrective work is complete as specified.

END OF SECTION

SECTION 230700

HVAC INSULATION

PART 1 GENERAL

1.1 SCOPE

A . This section includes insulation specifications for heating, ventilating and air conditioning piping, ductwork and equipment. Included are the following topics:

1. PART 1 – GENERAL.
    a. Scope.
    b. Related Work.
    c. Reference.
    d. Reference Standards.
    e. Quality Assurance.
    f. Description.
    g. Definitions.
    h. Shop Drawings.
    i. Operation and Maintenance Data.
    j. Environmental Requirements.
2. PART 2 – PRODUCTS.
    a. Materials.
    b. Insulation Types.
    c. Jackets.
    d. Accessories.
3. PART 3 – EXECUTION.
    a. Examination.
    b. Installation.
    c. Duct Insulation.

1.2 RELATED WORK

A . Section 230500 - Common Work Results for HVAC.

B . Section 233100 - HVAC Ducts and Casings.

1.3 REFERENCE

A . Applicable provisions of Division 1 govern work under this section.

1.4 REFERENCE STANDARDS

A .	ASTM B209	Aluminum and Aluminum Alloy Sheet and Plate.
B .	ASTM C165	Test Method for Compressive Properties of Thermal Insulations.
C .	ASTM C177	Heat Flux and Thermal Transmission Properties.
D .	ASTM C355	Test Methods for Test for Water Vapor Transmission of Thick Materials.
E .	ASTM C518	Heat Flux and Thermal Transmission Properties.
F .	ASTM C921	Properties of Jacketing Materials for Thermal Insulation.
G .	ASTM C1136	Flexible Low Permeance Vapor Retarders for Thermal Insulation.
H .	ASTM D1000	Methods for Pressure-Sensitive Adhesive-Coated Tapes Used for Electrical and Electronic Applications.
I .	ASTM E84	Surface Burning Characteristics of Building Materials.
J .	ASTM E814	Standard Test Method for Fire Tests of Penetration Firestop Systems.

K . MICA National Commercial & Industrial Insulation Standards.

L . NFPA 225 Surface Burning Characteristics of Building Materials.

M . UL 723 Surface Burning Characteristics of Building Materials.

1.5 QUALITY ASSURANCE

A . Refer to applicable sections in Bidding Requirements and Division 1 - General Requirements.

B . Label all insulating products delivered to the construction site with the manufacturer's name and description of materials.

C . Insulation systems shall be applied by experienced contractors. Within the past five (5) years, the Contractor shall be able to document the successful completion of a minimum of three (3) projects of at least 50% of the size and similar scope of the work specified in this section.

1.6 DESCRIPTION

A . Furnish and install all insulating materials and accessories as specified or as required for a complete installation. The following types of insulation are specified in this section:
1. Duct Insulation.

B . Install all insulation in accordance with the latest edition of MICA (Midwest Insulation Contractors Association) Standard and manufacturer's installation instructions. Exceptions to these standards will only be accepted where specifically modified in these specifications, or where prior written approval has been obtained from the Owner Project Representative.

1.7 DEFINITIONS

A . Concealed: Shafts, furred spaces, space above finished ceilings, utility tunnels and crawl spaces. All other areas, including walk-through tunnels, shall be considered as exposed.

1.8 SHOP DRAWINGS

A . Submit a schedule of all insulating materials to be used on the project, including adhesives, fastening methods, fitting materials along with material safety data sheets and intended use of each material. Include manufacturer's technical data sheets indicating density, thermal characteristics, jacket type, and manufacturer's installation instructions.

1.9 OPERATION AND MAINTENANCE DATA

A . All operations and maintenance data shall comply with the submission and content requirements specified.

1.10 ENVIRONMENTAL REQUIREMENTS

A . Do not store insulation materials on grade or where they are at risk of becoming wet. Do not install insulation products that have been exposed to water.

B . Protect installed insulation work with plastic sheeting to prevent water damage.

PART 2 PRODUCTS

2.1 MATERIALS

A . Manufacturers:
1. Armacell: www.armacell.com.
2. Certainteed: www.certainteed.com.
3. Johns Manville: www.johnsmanville.com.
4. Knauf: www.knaufusa.com.
5. Owens-Corning: www.insulation.owens-corning.com.
6. VentureTape: www.venturetape.com.

B . Materials or accessories containing asbestos will not be accepted.

2.2 INSULATION TYPES

A . Insulating materials shall be fire retardant, moisture and mildew resistant, and vermin proof. Insulation shall be suitable to receive jackets, adhesives and coatings as indicated.

B . Flexible Fiberglass Insulation:
1. Minimum nominal density of 0.75 lbs. per cu. ft., and thermal conductivity of not more than 0.3 at 75 degrees F, rated for service to 250 degrees F.

C . Rigid Fiberglass Insulation:
1. Minimum nominal density of 3 lbs. per cu. ft., and thermal conductivity of not more than 0.23 at 75 degrees F, minimum compressive strength of 25 PSF at 10% deformation, rated for service to 450 degrees F.

D . Foil-scrim-polyethylene vapor barrier jacket, factory applied to insulation, maximum permeance of .02 perms.

2.3 JACKETS

A . Foil Scrim All Service Jackets (FSJ):
1. Glass fiber reinforced foil kraft laminate, factory applied to insulation. Maximum permeance of .02 perms and minimum beach puncture resistance of 25 units.

2.4 ACCESSORIES

A . All products shall be compatible with surfaces and materials on which they are applied, and be suitable for use at operating temperatures of the systems to which they are applied.

B . Adhesives, sealants, and protective finishes shall be as recommended by insulation manufacturer for applications specified.

C . Insulation bands to be 3/4 inch wide, constructed of aluminum or stainless steel. Minimum thickness to be .015 inch for aluminum and .010 inch for stainless steel.

D . Tack fasteners to be stainless steel ring grooved shank tacks.

E . Staples to be clinch style.

F . Insulating cement to be ANSI/ASTM C195, hydraulic setting mineral wool.

G . Finishing cement to be ASTM C449.

H . Bedding compounds to be non-shrinking and permanently flexible.

I . Vapor barrier coatings to have maximum applied water vapor permeance of .05 perms.

J . Fungicidal water base coating (Foster 40-20 or equal) to be compatible with vapor barrier coating.

PART 3 EXECUTION

3.1 EXAMINATION

A . Verify that all piping, equipment, and ductwork are tested and approved prior to installing insulation. Do not insulate systems until testing and inspection procedures are completed.

B . Verify that all surfaces are clean, dry and without foreign material before applying insulation materials.

3.2 INSTALLATION

A . All materials shall be installed by skilled labor regularly engaged in this type of work. All materials shall be installed in strict accordance with manufacturer’s recommendations, building codes, and industry standards. Do not install products when the ambient

temperature or conditions are not consistent with the manufacturer's recommendations. Surfaces to be insulated must be clean and dry.

B . Locate insulation and cover seams in the least visible location. All surface finishes shall be extended in such a manner as to protect all raw edges, ends and surfaces of insulation.

C . Install insulation with smooth and even surfaces. Poorly fitted joints or use of filler in voids will not be accepted. Provide neatly beveled and coated terminations at all nameplates, uninsulated fittings, or at other locations where insulation terminates.

D . Use full length material (as delivered from manufacturer) wherever possible. Scrap piecing of insulation or pieces cut undersize and stretched to fit will not be accepted.

E . All duct insulation shall be continuous through walls, ceiling or floor openings and through sleeves except where firestop or firesafing materials are required. Vapor barriers shall be maintained continuous through all penetrations.

F . Provide a continuous unbroken moisture vapor barrier on insulation applied to systems noted below. Attachments to cold surfaces shall be insulated and vapor sealed to prevent condensation.

G . Provide a complete vapor barrier for insulation on the following systems:
1. Insulated Duct.
2. Equipment, ductwork or piping with a surface temperature below 65 degrees F.

3.3 DUCT INSULATION

A . General:
1. Secure flexible duct insulation on sides and bottom of ductwork over 24" wide and all rigid duct insulation with weld pins. Space fasteners 18" on center or less as required to prevent sagging.
2. Secure rigid board insulation to ductwork with weld pins. Apply insulation with joints firmly butted as close as possible to the equipment surface. Pins shall be located a maximum of 3" from each edge and spaced no greater than 12" on center.
3. Install weld pins without damage to the interior galvanized surface of the duct. Clip pins back to washer and cover penetrations with tape of same material as jacket. Firmly butt seams and joints and cover with 4" tape of same material as jacket. Seal tape with plastic applicator and secure with staples. All joints, seams, edges and penetrations to be fully vapor sealed.
4. Stop and point insulation around access doors and damper operators to allow operation without disturbing insulation or jacket material.
5. External supply duct insulation is not required where ductwork contains continuous 1" acoustical liner. Provide 4" overlap of external insulation over ends of acoustically lined sections.
6. Where insulated ductwork is supported by trapeze hangers, the insulation shall be installed continuous through the hangers. Drop the supporting channels required to facilitate the installation of the insulation. Where rigid board or flexible insulation is specified, install high density inserts to prevent the weight of the ductwork from crushing the insulation.

END OF SECTION

SECTION 233100

HVAC DUCTS AND CASINGS

PART 1 GENERAL

1.1 SCOPE

A . This section includes specifications for all duct systems used on this project. Included are the following topics:
1. PART 1 – GENERAL.
   a. Scope.
   b. Related Work.
   c. Reference.
   d. Reference Standards.
   e. Shop Drawings.
   f. Design Criteria.
   g. Delivery, Storage and Handling.
2. PART 2 – PRODUCTS.
   a. General.
   b. Duct Pressure Class.
   c. Materials.
   d. Low Pressure Ductwork (Maximum 2 inch pressure class).
   e. Duct Sealant.
   f. Gaskets.
3. PART 3 – EXECUTION.
   a. Installation.
   b. Ductwork Support.
   c. Low Pressure Duct (Maximum 2 inch pressure class).
   d. Cleaning.

1.2 RELATED WORK

A . Section 230593 - Testing, Adjusting, and Balancing for HVAC.

B . Section 233300 - Air Duct Accessories.

1.3 REFERENCE

A . Applicable provisions of Division 1 govern work under this Section.

1.4 REFERENCE STANDARDS

A .	ASTM A90	Test Method for Weight of Coating on Zinc-Coated (Galvanized) Iron or Steel Articles.
B .	ASTM A623	Standard Specification for Steel Sheet, Zinc-Coated (Galvanized) by the Hot-Dip Process.
C .	ASTM A527	Specification for General Requirements for Steel Sheet, Zinc- Coated (Galvanized) by the Hot-Dip Process, Lock-Forming Quality.
D .	ASTM 924	Standard Specification for General Requirements for Sheet Steel, Metallic-coated by the Hot-dip Method.
E .	ASTM C 1071	Specification for Fibrous Glass Duct Lining Insulation.
F .	ASTM E 84	Test Method for Surface Burning Characteristics of Building Materials.
G .	ASTM C 1338	Test Method for Determining Fungal Resistance of Insulation Materials and Facings.
H .	ASTM C 916	Standard Specification for Adhesives for Duct Thermal Insulation

NFPA 90A Standard for the Installation of Air Conditioning and Ventilating Systems.

I . UL 181 Standard for Safety for Factory Made Air Ducts and Air Connectors.

J . NAIMA Fibrous Glass Duct Liner Standard.

1.5 SHOP DRAWINGS

A . Include manufacturer's data and/or Contractor data for the following:
1. Duct sealant and gasket material.
2. Duct liner including data on thermal conductivity, air friction correction factor, and limitation on temperature and velocity.

1.6 DESIGN CRITERIA

A . Construct all ductwork to be free from vibration, chatter, objectionable pulsations and leakage under specified operating conditions.

B . Use material, weight, thickness, gauge, construction and installation methods as outlined in the following SMACNA publications, unless noted otherwise:
1. HVAC Duct Construction Standards, Metal and Flexible, 3rd Edition, 2005.
2. HVAC Air Duct Leakage Test Manual, 1st Edition, 1985.
3. HVAC Systems - Duct Design, 4th Edition, 2006.
4. Rectangular Industrial Duct Construction Standard, 2nd Edition, 2004.
5. Round Industrial Duct Construction Standards, 2nd Edition, 1999.

C . Use products which conform to NFPA 90A, possessing a flame spread rating of not over 25 and a smoke developed rating no higher than 50.

1.7 DELIVERY, STORAGE AND HANDLING

A . Promptly inspect shipments to ensure that Ductwork is undamaged and complies with the specification.

B . Protect Ductwork against damage.

C . Protect Ductwork by storing inside or by durable, waterproof, above ground packaging. Do not store material on grade. Protect Ductwork from dirt, dust, construction debris and foreign material. Where end caps/packaging are provided, take precautions so caps/packaging remain in place and free from damage.

D . Offsite storage agreements do not relieve the contractor from using proper storage techniques.

E . Storage and protection methods must allow inspection to verify products.

PART 2 PRODUCTS

2.1 GENERAL

A . All sheet metal used for construction of duct shall be 24 gauge or heavier except for round and spiral ductwork and spiral duct take-offs 12” and below may be 26 gauge where allowed in SMACNA HVAC Duct Construction Standards, Metal and Flexible, 3rd Edition, 2005.

B . Duct sizes indicated on plans are net inside dimensions; where duct liner is specified, dimensions are net, inside of liner.

2.2 DUCTWORK PRESSURE CLASS

A . Minimum acceptable duct pressure class, for all ductwork except transfer ductwork, is 2 inch W.G. positive or negative, depending on the application. Transfer ductwork minimum acceptable duct pressure class is 1 inch W.G. positive or negative, depending on the application.

2.3 MATERIALS

A . Galvanized Steel Sheet:
1. Use ASTM A 653 galvanized steel sheet of lock forming quality. Galvanized coating to be 1.25 ounces per square foot, both sides of sheet, G90 in accordance with ASTM A90. Provide “Paint Grip” finish for ductwork that will be painted.

2.4 LOW PRESSURE DUCTWORK (MAXIMUM 2 INCH PRESSURE CLASS)

A . Fabricate and install ductwork in sizes indicated on the drawings and in accordance with SMACNA recommendations, except as modified below.

B . Construct so that all interior surfaces are smooth. Use slip and drive or flanged and bolted construction when fabricating rectangular ductwork. Use spiral lock seam construction when fabricating round spiral ductwork. Sheet metal screws may be used on duct hangers, transverse joints and other SMACNA approved locations if the screw does not extend more than 1/2 inch into the duct.

C . Use elbows and tees with a center line radius to width or diameter ratio of 1.5 wherever space permits. When a shorter radius must be used due to limited space, install single wall sheet metal splitter vanes in accordance with SMACNA publications, Type RE 3. Where space will not allow and the C value of the radius elbow, as given in SMACNA publications, exceeds 0.31, use rectangular elbows with turning vanes as specified in Section 233300. Square throat-radius heel elbows will not be acceptable. Straight taps or bullhead tees are not acceptable.

D . Where rectangular elbows are used, provide turning vanes in accordance with Section 233300.

E . Provide expanded take-offs or 45 degree entry fittings for branch duct connections with branch ductwork airflow velocities greater than 700 fpm. Square edge 90-degree take-off fittings or straight taps will not be accepted.

F . Button punch snaplock construction will not be accepted on aluminum ductwork.

G . Round ducts may be substituted for rectangular ducts if sized in accordance with ASHRAE table of equivalent rectangular and round ducts. No variation of duct configuration or sizes permitted except by written permission of the Architect/Engineer. All uninsulated exposed round duct shall be spiral type.

H . Increase duct sizes gradually, not exceeding 15 degrees divergence wherever possible. Divergence upstream of equipment shall not exceed 30 degrees; convergence downstream shall not exceed 45 degrees.

2.5 DUCT SEALANT

A . Manufacturer:
1. 3M 800: www.3m.com.
2. 3M 900: www.3m.com.
3. H.B. Fuller/Foster: www.hbfuller.com.
4. Lockformer Cold Sealant: www.lockformer.com.
5. Mon-Eco Industries: www.mon-ecoindustries.com.
6. United Sheet Metal: www.unitedsheetmetal.com.

B . Silicone sealants are not allowed in any type of ductwork installation.

C . Install sealants in strict accordance with manufacturer's recommendations, paying special attention to temperature limitations. Allow sealant to fully cure before pressure testing of ductwork, or before startup of air handling systems.

2.6 GASKETS

A . 2 inch pressure class and lower:
1. Soft neoprene or butyl gaskets in combination with duct sealant for flanged joints.

PART 3 EXECUTION

3.1 INSTALLATION

A . Verify dimensions at the site, making field measurements and drawings necessary for fabrication and erection. Check plans showing work of other trades and consult with Architect in the event of any interference.

B . Make allowances for beams, pipes or other obstructions in building construction and for work of other Contractors. Transform, divide or offset ducts as required, in accordance with SMACNA HVAC Duct Construction Standards, Figure 4-7, except do not reduce duct to less than six inches in any dimension and do not exceed an 8:1 aspect ratio. Where it is necessary to take pipes or similar obstructions through ducts, construct easement as indicated in SMACNA HVAC Duct Construction Standards, Figure 4-8, Fig. E. In all cases, seal to prevent air leakage. Pipes or similar obstructions may not pass through high pressure or fume exhaust ductwork.

C . Test openings for test and balance work will be provided under Section 230593.

D . Provide frames constructed of angles or channels for coils, filters, dampers or other devices installed in duct systems, and make all connections to such equipment including equipment furnished by others. Secure frames with gaskets and screws or nut, bolts and washers.

E . Install duct to pitch toward outside air intakes and drain to outside of building. Solder or seal seams to form watertight joints.

F . Install all motor operated dampers and connect to or install all equipment furnished by others. Blank off all unused portions of louvers, as indicated on the drawings, with 1-1/2 inch board insulation with galvanized sheet metal backing on both sides.

G . Do not install ductwork through dedicated electrical rooms or spaces unless the ductwork is serving this room or space.

H . Locate ducts with sufficient space around equipment to allow normal operating and maintenance activities.

I . Provide adequate access to ductwork for cleaning purposes.

J . Provide temporary capping of ductwork openings to prevent entry of dirt, dust and foreign material.

K . Protect diffusers, registers and grilles with plastic wrap or some other approved form of protection to maintain dirt and dust free and to prevent entry of dirt, dust and foreign material into the Ductwork.

L . During construction provide temporary closures of metal or taped polyethylene on open ductwork to prevent construction dust from entering ductwork system.

3.2 DUCTWORK SUPPORT

A . Support ductwork in accordance with SMACNA HVAC Duct Construction Standards, Figure 5-5, except supporting ductwork with secure wire method is not allowed.

B . Support with 3/32 inch, 7 x 7, stainless steel air-craft cable, with matching fastener rated for 50% of actual load, will be allowed on round ductwork under 12 inches if installed as detailed, with cable double looped on duct and at point of support.

3.3 LOW PRESSURE DUCT (MAXIMUM 2 INCH PRESSURE CLASS)

A . Seal all duct, with the exception of transfer ducts, in accordance with SMACNA seal class "A"; all seams, joints, and penetrations shall be sealed.

B . Install a manual balancing damper in each branch duct and for each diffuser or grille. The use of splitter dampers, extractors, or grille face dampers will not be accepted for balancing dampers.

C . Hangers must be wrapped around bottom edge of duct and securely fastened to duct with sheet metal screws or pop rivets. Trapeze hangers may be used at Contractor's option.

3.4 CLEANING

A . Remove all dirt and foreign matter from the entire duct system and clean diffusers, registers, grilles and the inside of air-handling units before operating fans.

B . Clean duct systems with high power vacuum machines where systems have been used for temporary heat, air-conditioning, or ventilation purposes during construction. Protect equipment that may be harmed by excessive dirt with filters, or bypass during cleaning.

END OF SECTION

INTENTIONALLY LEFT BLANK

SECTION 233300

AIR DUCT ACCESSORIES

PART 1 GENERAL

1.1 SCOPE

A . This section includes accessories used in the installation of duct systems. Included are the following topics:
1. PART 1 – GENERAL.
   a. Related Work.
   b. Reference.
   c. Reference Standards.
   d. Shop Drawings.
   e. Operation and Maintenance Data.
2. PART 2 – PRODUCTS.
   a. Manual Volume Dampers.
   b. Turning Vanes.
   c. Control Dampers.
   d. Smoke Detectors.
   e. Access Doors.
   f. Flexible Duct.
   g. Duct Lining.
   h. Duct Flexible Connections.
   i. Hoods for Intake and Exhaust.
3. PART 3 – EXECUTION.
   a. Manual Volume Dampers.
   b. Turning Vanes.
   c. Control Dampers.
   d. Smoke Detectors.
   e. Access Doors.
   f. Flexible Duct.
   g. Duct Lining.
   h. Duct Flexible Connections.
   i. Hoods for Intake and Exhaust.

1.2 RELATED WORK

A . Section 230548 - Vibration and Seismic Controls for HVAC Piping and Equipment.

B . Section 233100 - HVAC Ducts and Casings.

1.3 REFERENCE

A . Applicable provisions of Division 1 govern work under this Section.

1.4 REFERENCE STANDARDS

A . NFPA 90A Standard for Installation of Air Conditioning and Ventilating Systems.

B . SMACNA HVAC Duct Construction Standards - Metal and Flexible, 2nd Edition, 1995. UL 214.

C . UL 555 (6th edition) Standard for Fire Dampers and Ceiling Dampers.

1.5 SHOP DRAWINGS

A . Submit for all accessories and include dimensions, capacities, ratings, installation instructions, and appropriate identification.

B . Include certified test data on dynamic insertion loss, self-noise power levels, and aerodynamic performance of sound attenuators.

C . Submit manufacturer's color charts where finish color is specified to be selected by the Engineer.

1.6 OPERATION AND MAINTENANCE DATA

A . All operations and maintenance data shall comply with the submission and content requirements specified.

PART 2 PRODUCTS

2.1 MANUAL VOLUME DAMPERS

A . Manufacturers:
1. Ruskin: www.ruskin.com.
2. Vent Products: www.ventproducts.com.
3. Air Balance: www.airbalance.com.

B . Dampers must be constructed in accordance with SMACNA Fig. 2-12, Fig. 2-13, and notes relating to these figures, except as modified below.

C . Reinforce all blades to prevent vibration, flutter, or other noise. Construct dampers in multiple sections with mullions where width is over 48 inches. Use rivets or tack welds to secure individual components; sheet metal screws will not be accepted. Provide operators with locking devices and damper position indicators for each damper; use an elevated platform on insulated ducts. Provide end bearings or bushings for all volume damper rods penetrating ductwork constructed to a 3" w.c. pressure class or above.

2.2 TURNING VANES

A . Manufacturers:
1. Aero Dyne: www.aero-dyne.net.
2. Anemostat: www.anemostat.com.
3. Hart & Cooley: www.hartandcooley.com.

B . Construct turning vanes and runners for square elbows in accordance with SMACNA Fig. 2-3 and Fig. 2-4 except use only airfoil type vanes. Construct turning vanes for short radius elbows and elbows where one dimension changes in the turn in accordance with SMACNA Fig. 2-5 and Fig. 2-6.

2.3 CONTROL DAMPERS

A . Control dampers are integral to the packaged rooftop units and exhaust fans. New dampers for Furnace outside air control shall be provided and installed by the Mechanical Contractor. Wiring for dampers shall be by the Mechanical Contractor.

2.4 ACCESS DOORS

A . Access door to be designed and constructed for the pressure class of the duct in which the door is to be installed. Doors in exposed areas shall be hinged type with cam sash lock. Hinges shall be steel full length continuous piano type. Doors in concealed spaces may be secured in place with cam sash latches. For both hinged and non-hinged doors provide sufficient number of camp sash latches to provide air tight seal when door is closed. Do not use hinged doors in concealed spaces if this will restrict access. Use minimum 1” deep 24 gauge galvanized steel double wall access doors with minimum 24 gauge galvanized steel frames. For non-galvanized ductwork, use minimum 1” deep double wall access door with frame that shall use materials of construction identical to adjacent ductwork. Provide double neoprene gasket that shall provide seals from the frame to the door and frame to the duct. When access doors are installed in insulated ductwork or equipment provide insulated doors with insulation equivalent to what is provided for adjacent ductwork or equipment. Access doors constructed with sheet metal screw fasteners will not be accepted.

2.5 FLEXIBLE DUCT

A . Manufacturers:
1. Anco Products: www.ancoproductsinc.com.
2. Clevaflex: www.clevaflex.com.
3. Thermaflex: www.thermaflex.net.
4. Flexmaster: www.flexmasterusa.com.

B . Factory fabricated , UL 181 listed as a class 1 duct, and having a flame spread of 25 or less and smoke developed rating of 50 or under in accordance with NFPA 90A.

C . Suitable for pressures and temperatures involved but not less than a 180°F service temperature and ±2 inch pressure class, depending on the application.

D . Duct to be composed of polyester film, aluminum laminate or woven and coated fiberglass fabric bonded permanently to corrosion resistant coated steel wire helix. Two-ply, laminated, and corrugated aluminum construction may also be used.

E . Where duct is specified to be insulated, provide a minimum 1 inch fiberglass insulation blanket with maximum thermal conductance of 0.23 K (75 degrees F.) and vapor barrier jacket of polyethylene or metalized reinforced film laminate. Maximum perm rating of vapor barrier jacket to be 0.1 perm.

2.6 DUCT LINING

A . Manufacturer:
1. Manville: www.jm.com.
2. Owens-Corning: www.owenscorning.com.
3. Knauf: www.knaufusa.com.

B . 1 inch thick, flexible, mat faced insulation made from inorganic glass fibers bonded with a thermosetting resin with thermal conductivity of .25 Btu inch / hour sq.ft. deg F.

C . Meet erosion testing per UL 181 or ASTM C 1071 for 5000 fpm maximum air velocity. ASTM C 411 maximum operating temperature rating of 250 deg F. ASTM E84 flame spread less than 25 and smoke developed less than 50.

D . Meet requirements of ASTM C 1338 and ASTM G21 for fungi resistance.

E . Install liner using adhesive conforming to ASTM C 916.

2.7 DUCT FLEXIBLE CONNECTIONS

A . Material to be fire retardant, be UL 214 listed, and meet the requirements of NFPA 90A.

B . Connections to be a minimum of 3 inches wide, crimped into metal edging strip, and air tight. Connections to have adequate flexibility and width to allow for thermal expansion/contraction, vibration of connected equipment, and other movement.

C . Use coated glass fiber fabric for all applications. Material for inside applications to be double coated with neoprene, air and water tight, suitable for temperatures between -10°F and 200°F, and have a nominal weight of 30 ounces per square yard.

2.8 HOODS FOR INTAKE AND EXHAUST

A . Manufacturers:
1. Acme: www.acmefan.com.
2. Carnes: www.carnes.com.
3. Cook: www.lorencook.com.
4. Greenheck: www.greenheck.com.
5. Louvers and Dampers: wwwlouvers-dampers.com.
6. Penn: www.pennstateind.com.

7. Substitutions: Refer to applicable sections in Bidding Requirements and Division 1 - General Requirements.

B . Use low silhouette type hoods.

C . Use louvered penthouse type hoods with drainable blade louvers.

D . Construct hoods of aluminum.

E . Construct hoods of galvanized steel with baked enamel finish; color to be selected by the Architect during the submittal stage.

For hoods and louvered penthouses maintain minimum 30 inches from bottom of air intake to finished roof.

F . Provide bird screen and motor operated damper for each hood.

PART 3 EXECUTION

3.1 MANUAL VOLUME DAMPERS

A . Install manual volume dampers in each branch duct and for each grille, register, or diffuser as far away from the outlet as possible while still maintaining accessibility to the damper. Install so there is no flutter or vibration of the damper blade(s).

3.2 TURNING VANES

A . Install turning vanes in all rectangular, mitered elbows in accordance with SMACNA standards and/or manufacturer's recommendations.

B . Install double wall, airfoil, 2 inch radius vanes in ducts with vane runner length 18" or greater and air velocity less than 2000 fpm. Install double wall, airfoil, 4-1/2 inch radius vanes in ducts with vane runner length 18" or greater and air velocity 2000 fpm or greater.

C . If duct size changes in a mitered elbow, use single wall type vanes with a trailing edge extension. If duct size changes in a radius elbow or if short radius elbows must be used, install sheetmetal turning vanes in accordance with SMACNA Figure 2-5 and Figure 2-6.

3.3 ACCESS DOORS

A . Install access doors where specified, indicated on the drawings, and in locations where maintenance, service, cleaning or inspection is required. Examples include, but are not limited to motorized dampers, fire dampers, smoke detectors, fan bearings, heating and cooling coils, filters, and control devices needing periodic maintenance.

B . Size and numbers of duct access doors to be sufficient to perform the intended service. Minimum access door size shall be 8 x 8 inch size for hand access, 18 x 18 inch size for shoulder access, or other size as indicated.

3.4 FLEXIBLE DUCT

A . Flexible duct may only be used for final connections of air outlets at diffuser, register, and grille locations. Where flexible duct is used, it shall be the minimum length required to make the final connections, but no greater than 5 feet in length, and have no more than one (1) 90 degree bend.

B . Secure inner jacket of flexible duct in place with stainless steel metal band clamp. Secure insulation vapor barrier jacket in place with steel or nylon draw band. Sheetmetal screws and/or duct tape will not be accepted.

C . Flexible duct used to compensate for misalignment of main duct or branch duct will not be accepted.

D . Individual sections of flexible ductwork shall be of one piece construction. Splicing of short sections will not be accepted.

E . Flexible ductwork used as transfer duct shall be sized for a maximum velocity of 300 fpm.

F . Penetration of any partition, wall, or floor with flexible duct will not be accepted.

3.5 DUCT LINING

A . Do not apply lining to the following ductwork:
1. Outside air ductwork.

B . Install liner in compliance with the latest edition of NAIMA's Fibrous Glass Duct Liner Standard. Locate longitudinal joints at the corners of duct only. Cut and fit to assure lapped, compressed joints. Coat all transverse and longitudinal joints and edges with adhesive. Provide metal nosing on leading edge where lined duct is preceded by unlined duct. Adhere liner to duct with full coverage area of adhesive. Additionally, secure liner to duct using mechanical fasteners spaced as recommended by the liner manufacturer without compressing liner more than 1/8" with the fasteners.

3.6 DUCT FLEXIBLE CONNECTIONS

A . Install at all duct connections to rotating or vibrating equipment, including air handling units (unless unit is internally isolated), fans, or other motorized equipment in accordance with SMACNA Figure 2-19. Install thrust restraints to prevent excess strain on duct flexible connections at fan inlets and outlets; see Related Work.

3.7 HOODS FOR INTAKE AND EXHAUST

A . Install in locations indicated on the drawings, coordinating the roof opening location with the General Contractor.

END OF SECTION

INTENTIONALLY LEFT BLANK

SECTION 233400

HVAC FANS

PART 1 GENERAL

1.1 SCOPE

A . This section includes specifications for fans that are not an integral part of a manufactured device. Included are the following topics:
1. PART 1 – GENERAL.
    a. Scope.
    b. Related Work.
    c. Reference.
    d. Reference Standards.
    e. Shop Drawings.
    f. Operation and Maintenance Data.
    g. Design Criteria.
2. PART 2 – PRODUCTS.
    a. General.
    b. Power Roof Exhaust Fans.
3. PART 3 – EXECUTION.
    a. Installation.

1.2 RELATED WORK

A . Section 230513 - Common Motor Requirements for HVAC Equipment.

B . Section 230548 - Vibration and Seismic Controls for HVAC Piping and Equipment.

1.3 REFERENCE

A . Applicable provisions of Division 1 govern work under this Section.

1.4 REFERENCE STANDARDS

A . AMCA 203 AMCA Fan Application Manual – Troubleshooting.

B . AMCA 210 Laboratory Method of Testing Fans for Rating.

C . AMCA 300 Reverberant Room Method for Sound Testing of Fans.

D . NFPA 90A Standard for the Installation of Air Conditioning and Ventilating Systems.

1.5 SHOP DRAWINGS

A . Include dimensions, capacities, fan curves, materials of construction, ratings, weights, motors and drives, sound power levels, appropriate identification and vibration isolation for all equipment. Sound power levels to be based on tests performed in accordance with AMCA Standard 300.

B . Submit color selection charts for equipment where applicable.

C . Fan curves shall indicate the relationship of CFM to static or total pressure for various fan speeds. Brake horsepower, recommended selection range, and limits of operation are to also be indicated on the curves. Indicate operating point on the fan curves at design air quantity and indicate the manufacturer's recommended drive loss factor for the specific application. Tabular fan performance data is not acceptable.

1.6 OPERATION AND MAINTENANCE DATA

A . All operations and maintenance data shall comply with the submission and content requirements specified.

1.7 DESIGN CRITERIA

A . Tested and certify all fans in accordance with the applicable AMCA test code.

B . Each fan and motor combination shall be capable of delivering 110% of air quantity scheduled at scheduled static pressure. The motor furnished with the fan shall not operate into the motor service factor when operating under these conditions.

C . Consider drive efficiency in motor selection according to manufacturer's published recommendation or according to AMCA Publication 203, Appendix L.

D . Where inlet and outlet ductwork at any fan is changed from that shown on the drawings, provide any motor, drive and/or wiring changes required due to increased static pressure or baffling necessary to prevent uneven airflow or improve mixing.

E . All internal insulation and other components exposed to the airstream are to meet the flame spread and smoke ratings contained in NFPA 90A.

PART 2 PRODUCTS

2.1 GENERAL

A . Use fan size, class, type, arrangement, and capacity as scheduled.

B . Furnish complete with motors, wheels, drive assemblies, bearings, vibration isolation devices, and accessories required for specified performance and proper operation. All single phase motors to have inherent thermal overload protection.

C . Provide variable pitch sheaves for drives 3 hp and smaller Design all drives for 150% of motor rating.

D . Use OSHA approved belt guards that totally enclose the entire drive. Construct guards of expanded metal to allow for ventilation; provide tachometer openings at shaft locations.

E . Statically and dynamically balance all fans so they operate without objectionable noise or vibration.

2.2 POWER ROOF EXHAUST FANS

A . Manufacturers:
1. Carnes: www.carnes.com.
2. Greenheck: www.greenheck.com.
3. Penn: www.pennstateind.com.
4. Jenn-Air: www.jennair.com.
5. Cook: www.lorencook.com.
6. ACME: www.acmefan.com.
7. Substitutions: Refer to applicable sections in Bidding Requirements and Division 1 - General Requirements.

B . Provide upblast or downblast units, as scheduled, with aluminum housing, non-overloading type centrifugal wheel, inlet cone, factory mounted and wired motor and disconnect switch, and bird screen.

C . Electrical Contractor will provide disconnect switches and thermal overload protection for units with three phase motors.

D . This must be coordinated with the electrical specifications and the electrical designer.

E . Upblast units to have motor, bearings, and drives completely enclosed and isolated from the exhaust air stream with ventilation provided by outside air. Units handling grease laden vapors to be U.L. listed for conveying such vapors, operating continuously at 300 degrees F.

PART 3 EXECUTION

3.1 INSTALLATION

A . Install as detailed, and according to manufacturer's installation instructions.

END OF SECTION

INTENTIONALLY LEFT BLANK

SECTION 233713

DIFFUSERS, REGISTERS AND GRILLES

PART 1 GENERAL

1.1 SCOPE

A. This section includes specifications for air terminal equipment. Included are the following topics:
   1. PART 1 – GENERAL.
      a. Scope.
      b. Related Work.
      c. Reference.
      d. Reference Standards.
      e. Submittals.
      f. Design Criteria.
   2. PART 2 – PRODUCTS.
      a. Manufacturers.
      b. Square Ceiling Diffusers - High Performance.
      c. Eggcrate Grille.
   3. PART 3 – EXECUTION.
      a. Installation.

1.2 RELATED WORK

A. Section 230593 - Testing, Adjusting and Balancing for HVAC.

B. Section 233100 - HVAC Ducts and Casings.

C. Section 233300 - Air Duct Accessories.

1.3 REFERENCE

A. Applicable provisions of Division 1 govern work under this section.

1.4 REFERENCE STANDARDS

A. NFPA 90A - Installation of Air Conditioning and Ventilation Systems.

B. UL 181 - Factory-Made Air Ducts and Connectors.

C. ARI-ADC Standard 880.

1.5 SUBMITTALS

A. Furnish submittal information including, but not limited to, the following:
   1. Manufacturer's name and model number.
   2. Identification as referenced in the documents.
   3. Capacities/ratings.
   4. Materials of construction.
   5. Sound ratings.
   6. Dimensions.
   7. Finish.
   8. Color selection charts where applicable.
   9. Manufacturer's installation instructions.
   10. All other appropriate data.

1.6 DESIGN CRITERIA

A. All performance data shall be based on tests conducted in accordance with Air Diffusion Council (ADC) Test Code 1062 GRD 84.

PART 2 PRODUCTS

2.1 MANUFACTURERS

A. Carnes: www.carnes.com.

B. Krueger: www.krueger-hvac.com.

C. Titus: www.titus-hvac.com.

D. Metal-Aire: www.metalaire.com.

E. E.H. Price: www.price-hvac.com.

F. Acceptable manufacturers for specific products are listed under each item.

2.2 SQUARE CEILING DIFFUSERS - HIGH PERFORMANCE

A. Diffusers to be steel unless otherwise indicated, louvered face furnished with frame type appropriate to installation.

B. Diffuser shall have throw characteristics of a round diffuser having a 360º horizontal blow pattern.

C. Louver cones shall be one-piece construction with no corner joints.

D. White, baked enamel finish or powder coat finish, unless otherwise indicated.

E. High performance type diffuser incorporating short throws and low NC levels.

F. Manufacturers:
   1. Titus; Model TMS: www.titus-hvac.com.
   2. Carne; Series SF: www.carnes.com.
   3. Price; Model SCD: www.price-hvac.com.
   4. Metal Aire; Series 5800: www.metalaire.com.
   5. Krueger; Series 1400: www.krueger-hvac.com.

2.3 EGGCRATE GRILLE

A. Aluminum construction with frame type appropriate to installation.

B. Grille face 1/2" x 1/2" or 1" x 1" grid pattern 1" deep with a minimum of 85% free area.

C. Grille sizes and finishes as shown on drawings and/or as scheduled.

D. White, baked enamel finish or powder coat finish, unless otherwise indicated.

E. Screw holes on surface counter sunk to accept recessed type screws.

F. Manufacturers:
   1. Titus; Model 50: www.titus-hvac.com.
   2. Carnes; Model RAE or RAT: www.carnes.com.
   3. Price; Model 80: www.price-hvac.com.
   4. Metal Aire; Model CC: www.metalaire.com.
   5. Krueger; Model EGC: www.krueger-hvac.com.

PART 3 EXECUTION

3.1 INSTALLATION

A. Install grilles, registers and diffusers as shown on drawings and according to manufacturer's instructions.

B. Furnish diffusers with equalizing grids where it is not possible to maintain minimum 2 duct diameter straight duct into diffuser. Equalizing grids shall consist of individually adjustable vanes designed for equalizing airflow into diffuser neck and providing directional control of airflow.

C. Unless otherwise indicated, size ductwork drops to diffusers or grilles to match unit collar size.

D. Seal connections between ductwork drops and diffusers/grilles airtight.

E. Where diffusers, registers and grilles cannot be installed to avoid seeing inside duct, paint inside of duct with flat black paint to reduce visibility.

END OF SECTION

INTENTIONALLY LEFT BLANK

SECTION 235400

GAS FIRED FURNACES

PART 1 GENERAL

1.1 SCOPE

A . This section includes specifications for gas fired furnaces. Included are the following topics:
1. PART 1 – GENERAL.
   a. Scope.
   b. Related Work.
   c. Reference.
   d. Reference Standards.
   e. Energy Efficiency.
   f. Submittals.
   g. Operation and Maintenance Data.
   h. Warranty.
2. PART 2 – PRODUCTS.
   a. Furnaces.
3. PART 3 – EXECUTION.
   a. Installation.
   b. Furnaces.
   c. Owner Training.

1.2 RELATED WORK

A . Section 230513 - Common Motor Requirements for HVAC Equipment.

1.3 REFERENCE

A . Applicable provisions of Division 1 govern work under this section.

1.4 REFERENCE STANDARDS

A . AGA American Gas Association.

B . ANSI Z21.64 Direct Vent Central Furnaces.

C . GAMA Gas Appliance Manufacturers Association.

D . NEC National Electrical Code.

1.5 ENERGY EFFICIENCY

A . Provide gas furnaces that bear the ENERGY STAR label and meet the ENERGY STAR specifications for energy efficiency.

1.6 SUBMITTALS

A . Include specific manufacturer and model numbers, equipment identification corresponding to project drawings and schedules, dimensions, capacities, materials of construction, ratings, weights, power requirements and wiring diagrams, filter information and information for all accessories.

1.7 OPERATION AND MAINTENANCE DATA

A . All operations and maintenance data shall comply with the submission and content requirements specified.

1.8 WARRANTY

A . Furnace primary and secondary heat exchangers warranted for 20 years under normal use and maintenance. Remainder of furnace components warranted for 1 year from date of start up.

PART 2 PRODUCTS

2.1 FURNACES

A . Manufacturers:
1. Carrier: www.carrier.com.
2. Lennox: www.lennox.com.
3. York: www.york.com.

B . Substitutions: Refer to applicable sections in Bidding Requirements and Division 1 - General Requirements. Direct vent, sealed combustion, condensing type AGA certified for use with natural gas. Minimum annual fuel utilization efficiency (A.F.U.E.) of 91. All ratings are to be certified by GAMA. All wiring shall comply with the National Electrical Code.

C . 22 gauge steel casing with baked enamel finish or pre-painted galvanized steel. Insulate casing back and side panels with foil faced fiberglass insulation.

D . Construct primary heat exchanger of aluminized steel. Construct secondary heat exchanger of stainless steel with aluminum fins or of polypropylene laminated steel. Aluminized steel multi-port in-shot burner with hot surface or electronic spark ignition, approved for vertical or sidewall venting.

E . AGA listed gas controls including manual main shut-off valve, double automatic gas valves for redundancy and gas pressure regulator.

F . Centrifugal type blower fan statically and dynamically balanced with multiple speed, direct drive or belt drive fan motor. Provide low energy induced draft blower for heat exchanger prepurge and combustion gas venting.

G . Provide unit with 2” thick MERV 8 minimum disposable type panel air filter and filter holding rack.

H . Provide solid state integral control unit with all necessary controls and relays including but not limited to:
1. Pressure switch for airflow of flue products through furnace and out vent system.
2. Rollout switch with manual reset to prevent over temperature in burner area.
3. Electronic flame sensor.
4. Blower access safety interlock.
5. Timed blower start after main burners ignite.
6. Factory installed 24 v transformer for controls and thermostat.
7. LED’s to indicate status and to aid in troubleshooting.

I . Provide unit with matching cased "A" configuration cooling coil for upflow units, and vertical flat face configuration cooling coil for horizontal units.

J . Minimum 1/2" OD seamless copper tubing mechanically bonded to heavy ripple edged aluminum fins with thermal expansion valve, holding charge and copper tube stubs for field piping.

K . Non-corrosive stainless steel or polymer drain pan with 3/4" NPT drain connection.

L . 20 gauge steel Coil casing with baked enamel finish and fiberglass insulation.

M . This Contractor shall provide all temperature control and interlocking necessary to perform the specified control sequence. All wiring is to be in conduit in accordance with Division 26 - Electrical. All relays, transformers and controls are to be in enclosures.

N . Provide a Honeywell RedLINK Wireless VisionPRO 8000 – TH8110R1008 thermostat with 2 occupied periods per day, automatic changeover, separate heating and cooling set points for both occupied and unoccupied modes. Provide auxiliary controls on sub-base to open minimum outside air damper during occupied mode. Substitutions will not be accepted.

O . Provide lockable thermostat guards in public spaces.

P . During occupied mode run the supply fan continuously, cycle the cooling or heating as required to maintain occupied space temperature cooling or heating set point. During unoccupied mode cycle the supply fan and cooling or heating as required to maintain unoccupied cooling or heating temperature set point.

PART 3 EXECUTION

3.1 INSTALLATION

A . Install units as shown on plans and according to the manufacturer's installation instructions.

B . Install remote thermostats where indicated on the drawings. Provide all wiring between remote thermostats and the gas fired item.

3.2 FURNACES

A . Install on concrete housekeeping pad, steel stand or suspend unit from structure as indicated on the drawings. Pipe condensate to floor drain or as indicated on plans.

B . Provide schedule 40 PVC, ASTM D1785 combustion air and vent piping and fittings with solvent welded joints as indicated on the drawings. Terminate as recommended by the furnace manufacturer.

3.3 OWNER TRAINING

A . Contractor to provide factory authorized representative and/or field personnel knowledgeable with the operations, maintenance and troubleshooting of the system and/or components defined within this section for a minimum period of 8 hours.

END OF SECTION

INTENTIONALLY LEFT BLANK

SECTION 236213

PACKAGED AIR-COOLED REFRIGERANT COMPRESSOR AND CONDENSING UNITS

1.1 SCOPE

A . This section includes specifications for air cooled condensing units for use with split system type air conditioning. Included are the following topics:
1. PART 1 – GENERAL.
   a. Scope.
   b. Related Work.
   c. Reference.
   d. Reference Standards.
   e. Quality Assurance.
   f. Submittals.
   g. Operation and Maintenance Data.
   h. Delivery, Storage and Handling.
   i. Warranty.
2. PART 2 – PRODUCTS.
   a. Units up to 5 Tons.
   b. Refrigerant Piping Sizing.
   c. Refrigerant Piping Accessories.
3. PART 3 – EXECUTION.
   a. Installation.
   b. Startup.

1.2 RELATED WORK

A . Section 230500 - Common Work Results for HVAC.

1.3 REFERENCE

A . Applicable provisions of Division 1 shall govern work under this section.

1.4 REFERENCE STANDARDS

A .	ARI 210/240	Unitary Air Conditioning and Heat Pump Equipment.
B .	ARI 365	Commercial and Industrial Unitary Air Conditioning Condensing Units.
C .	ASHRAE 15	Safety Standard for Refrigeration Systems.
D .	ASHRAE 90.1	(2004 edition)Energy Standard for Buildings Except Low Rise Residential Buildings.
E .	NEC	National Electrical Code.
F .	ASTM B117	Standard Practice for Operating Salt Spray (fog) Apparatus.
G .	UL	Underwriters Laboratory.

1.5 QUALITY ASSURANCE

A . Unit Energy Efficiency Ratio (EER), Coefficient of Performance (COP) and Integrated Part Load Value (IPLV) shall meet the minimum applicable requirements of ASHRAE 90.1(2004 edition). Units that are labeled ENERGY STAR® will be acceptable.

B . Rate unit performance in accordance with the latest edition of ARI Standard 365 or ARI Standard 210/240, whichever is applicable for the equipment.

C . Construct units in accordance with ASHRAE 15, UL standards and the NEC. Units shall carry the UL label.

D . Factory run test units to see that each control device operates properly. Pressure test, evacuate, charge with holding charge of refrigerant and full oil charge prior to shipping from the factory.

1.6 SUBMITTALS

A . Submit shop drawings including the following information: specific manufacturer and model numbers, dimensional and weight data, required clearances, materials of construction, capacities and ratings, stages of unloading capacity achievable without hot gas bypass (and with hot gas bypass if applicable), refrigerant type and charge, component information, size and location of piping connections, electrical connections, wiring diagrams and information for all specialties and accessories.

B . Submit manufacturer's installation and start-up instructions, maintenance data, troubleshooting guide, parts lists, controls and accessories.

C . At substantial completion, submit warranty certificate and copy of start-up report.

1.7 OPERATION AND MAINTENANCE DATA

A . All operations and maintenance data shall comply with the submission and content requirements specified.

1.8 DELIVERY, STORAGE AND HANDLING

A . Comply with manufacturer's instructions for storing, rigging, unloading, and transporting units. Protect units from physical damage. Leave factory-shipping covers in place until installation.

B . Ship units to jobsite fully assembled.

1.9 WARRANTY

A . Provide a one-year parts and labor warranty on the entire unit beginning upon substantial completion of project.

B . Provide a five-year parts warranty on the compressor(s) beginning upon substantial completion of project.

PART 2 PRODUCTS

2.1 UNITS UP TO 5 TONS

A . Manufacturers:
1. Lennox: www.lennox.com.
2. Carrier: www.carrier.com.
3. York: www.york.com.

B . Provide factory assembled, outdoor mounted, air -cooled condensing unit suitable for on grade or rooftop installation. Include compressor, air cooled condenser, refrigerant, lubrication system, interconnecting wiring, safety and operating controls, motor starting components and additional features as specified herein or required for safe, automatic operation. Capacity and steps of unloading as indicated in the equipment schedule. Refrigerant is to be R-410A.

C . CABINET:
1. Construct cabinet of heavy gauge, galvanized steel coated with weather resistant paint. Provide removable access panels to facilitate full access to the compressor, fan and control components.

D . COMPRESSOR:
1. Provide hermetic reciprocating or scroll type compressor with built in motor winding temperature and current protection, liquid and suction service valves, gage ports, sight glass and liquid line filter dryer. Provide crankcase heater with reciprocating type compressors. Mount compressors on vibration isolators. Cooling shall be two-stage.

E . CONDENSER:
1. Provide condenser coils with aluminum alloy plate fins mechanically fastened to seamless copper tubing with integral subcooler. Construct coils with design working pressure suitable for the refrigerant. Louvered condenser guard shall be provided.

F . Provide direct-drive statically and dynamically balanced propeller type fans with vertical or horizontal discharge as indicated on the drawings and guards constructed of heavy gage PVC coated wire or galvanized steel.

G . POWER WIRING:
1. Provide factory installed 24-volt control circuit with fusing; control power transformer and all associated internal wiring. Provide a single point power connection to the unit(s). Provide factory installed magnetic contactors for compressor and condenser motors.
2. Electrical characteristics shall be as indicated in the equipment schedule.

H . CONTROLS:
1. Provide high/low refrigerant pressure cutouts with manual reset and anti-short cycle compressor timer.
2. Provide “low ambient” controls and accessories needed so that unit is capable of operating down to ambient temperature of 25F.

2.2 REFRIGERANT PIPING SIZING

A . The unit manufacturer shall verify the final refrigeration pipe sizing process to ensure conformance to specific unit requirements such as max lengths, refrigerant velocities, unloading considerations and proper oil return. Provide factory pre-charged line sets unless the distance between the unit and the evaporator coil is too great. In this case, provide sizing criteria and materials to the Mechanical Contractor for this purpose.

2.3 REFRIGERANT PIPING ACCESSORIES

A . For systems using R-410A, provide all refrigerant piping specialties with a maximum working pressure of full vacuum to 850 psig and a maximum working temperature of 225 degree F.

B . Filter Dryers: For circuits below 15 tons provide straight pattern filter dryers without replaceable core.

C . Sight glasses: Two piece brass construction with solder end connections. Include color indicator for sensing moisture.

D . Solenoid Valves: Two way normally closed with two piece brass body, full port, stainless steel plug, stainless steel spring, teflon diaphragm and solder end connections. Provide replaceable coil assembly.

E . Thermostatic Expansion Valves: Brass body, bronze disc, neoprene seat, bronze bonnet, stainless steel spring and solder end connections.

F . Charging Valves: Provide ¼” SAE brass male flare access ports with finger tight, quick seal caps. Provide 2-inch long copper extension sections.

G . Check valves: Spring loaded type with bronze body, bronze disc, neoprene seat, bronze bonnet, stainless steel spring and solder end connections.

PART 3 EXECUTION

3.1 INSTALLATION

A . Install units, piping and accessories in accordance with the manufacturer’s written instructions and recommendations. Mount unit(s) on a poured concrete pad on grade or on roof mounted rails as indicated on the drawings. Units shall be level on pitched roofs.

B . Maintain adequate service access and airflow clearances for all components as recommended by the manufacturer and as indicated on the drawings.

C . Charge unit(s) with full oil charge and refrigerant charge based on the entire refrigeration system pipe size and length.

D . Provide all control wiring in conduit in compliance Division 26 - Electrical.

E . Coordinate power wiring requirements with the electrical trade.

3.2 STARTUP

A . Adjust units for maximum operating efficiency, adjust all controls to required final settings and demonstrate that all components are functioning properly. Submit four copies of a written startup report following the initial start up. Include in the report: work done to the system, all readings taken, a statement certifying that the refrigeration system(s) are leak free and a statement certifying that the unit(s) have been placed in proper running condition as recommended by the manufacturer and as intended in the drawings and specifications.

END OF SECTION

SECTION 260500

COMMON WORK RESULTS FOR ELECTRICAL

PART 1 GENERAL

1.1 SECTION INCLUDES

A. The electrical work included in all other Divisions is the responsibility of the Contractor performing the Division 26 work unless noted otherwise.

1.2 SCOPE

A. The work under this section includes basic electrical requirements, which are applicable to all Division 26 sections. This section includes information common to two or more technical specification sections or items that are of a general nature, not conveniently fitting into other technical sections. Included are the following topics:
   1. PART 1 – GENERAL.
      a. Scope.
      b. Related Work.
      c. Reference Standards.
      d. Regulatory Requirements.
      e. Quality Assurance.
      f. Continuity of Existing Services and Systems.
      g. Protection of Finished Surfaces.
      h. Approved Electrical Testing Laboratories.
      i. Sleeves and Openings.
      j. Sealing and Firestopping.
      k. Intent.
      l. Omissions.
      m. Submittals.
      n. Project/Site Conditions.
      o. Work Sequence and Scheduling.
      p. Work by Other Trades.
      q. Offsite Storage.
      r. Request and Certificate for Payment.
      s. Salvage Materials.
      t. Certificates and Inspections.
      u. Operating and Maintenance Data.
      v. Record Drawings.
   2. PART 2 – PRODUCTS.
      a. Access Panels and Doors.
      b. Identification.
      c. Sealing and Firestopping.
   3. PART 3 – EXECUTION.
      a. Excavation and Backfill.
      b. Concrete Work.
      c. Cutting and Patching.
      d. Building Access.
      e. Equipment Access.
      f. Coordination.
      g. Sleeves.
      h. Sealing and Firestopping.
      i. Housekeeping and Clean Up.
      j. Owner Training.

1.3 RELATED WORK

A. Applicable provisions of Bidding requirements and Division 1 – General Requirements govern work under this Section.

1.4 REFERENCE STANDARDS

A. Abbreviations of standards organizations referenced in this and other sections are as follows:
   1. ANSI American National Standards Institute.
   2. ASTM American Society for Testing and Materials.
   3. EPA Environmental Protection Agency.
   4. ETL Electrical Testing Laboratories, Inc.
   5. IEEE Institute of Electrical and Electronics Engineers.
   6. IES Illuminating Engineering Society.
   7. ISA Instrument Society of America.
   8. NBS National Bureau of Standards.
   9. NEC National Electric Code.
   10. NEMA National Electrical Manufacturers Association.
   11. NESC National Electrical Safety Code.
   12. NFPA National Fire Protection Association.
   13. UL Underwriters Laboratories Inc.

1.5 REGULATORY REQUIREMENTS

A. All work and materials are to conform in every detail to applicable rules and requirements of the State of Oklahoma Electrical Code the National Electrical Code (ANSI/NFPA 70), other applicable National Fire Protection Association codes, the National Electrical Safety Code, and present manufacturing standards (including NEMA).

B. All Division 26 work shall be done under the direction of a currently certified State of Oklahoma Certified Master Electrician.

1.6 QUALITY ASSURANCE

A. Where equipment or accessories are used which differ in arrangement, configuration, dimensions, ratings, or engineering parameters from those indicated on the contract documents, the Contractor is responsible for all costs involved in integrating the equipment or accessories into the system and the assigned space and for obtaining the performance from the system into which these items are placed.

B. Manufacturer references used herein are intended to establish a level of quality and performance requirements unless more explicit restrictions are stated to apply. Where two or more manufacturers are specified and no reference is made to “or equal” other manufacturers, other manufacturers will be considered. Written notification of intent to use manufacturers other than those specified is required ten days prior to bid. Submittals shall be reviewed only after bidding and may be rejected if any aspect of the equivalent product is deemed lesser than that of the specified product by the specifier. The contractor shall be responsible for ensuring alternates are equivalent to those specified.

C. All materials, except medium voltage equipment and components, shall be listed by and shall bear the label of an approved electrical testing laboratory. If none of the approved electrical testing laboratories has published standards for a particular item, then other national independent testing standards, if available, applicable, and approved by Owner, shall apply and such items shall bear those labels. Where one of the approved electrical testing laboratories has an applicable system listing and label, the entire system, except for medium voltage equipment and components, shall be so labeled.

1.7 CONTINUITY OF EXISTING SERVICES AND SYSTEMS

A. No outages shall be permitted on existing systems except at the time and during the interval specified by the Owner Project Representative. The Owner may require written approval. Any outage must be scheduled when the interruption causes the least interference with normal schedules and business routines. No extra costs will be paid to the Contractor for such outages which must occur outside of regular weekly working hours.

B. This Contractor shall restore any circuit interrupted as a result of this work to proper operation as soon as possible. Note that Owner operations are on a seven-day week schedule, unless otherwise specified.

1.8 PROTECTION OF FINISHED SURFACES

A. Furnish one can of touch-up paint for each different color factory finish furnished by the Contractor. Deliver touch-up paint with other "loose and detachable parts" as covered in the General Requirements.

1.9 APPROVED ELECTRICAL TESTING LABORATORIES

A. The following laboratories are approved for providing electrical product safety testing and listing services as required in these specifications:
   1. Underwriters Laboratories Inc.
   2. Electrical Testing Laboratories, Inc.

1.10 SLEEVES AND OPENINGS

A. Below Grade Wall Penetrations.

B. Conduit Penetrations.

1.11 SEALING AND FIRESTOPPING

A. Sealing and firestopping of sleeves/openings between conduits, cable trays, wireways, troughs, cablebus, busduct, etc. and the structural or partition opening shall be the responsibility of the Contractor whose work penetrates the opening. The Contractor responsible shall hire individuals skilled in such work to do the sealing and firestopping. These individuals hired shall normally and routinely be employed in the sealing and fireproofing occupation.

1.12 INTENT

A. The Contractor shall furnish and install all the necessary materials, apparatus, and devices to complete the electrical equipment and systems installation herein specified, except such parts as are specifically exempted herein.

B. If an item is either called for in the specifications or shown on the plans, it shall be considered sufficient for the inclusion of said item in this contract. If a conflict exists within the Specifications or exists within the Drawings, the Contractor shall furnish the item, system, or workmanship, which is the highest quality, largest, or most closely fits the Owner's intent (as determined by the Owner / Project Manager). Refer to the General Conditions of the Contract for further clarification.

C. It must be understood that the details and drawings are diagrammatic. The Contractor shall verify all dimensions at the site and be responsible for their accuracy.

D. All sizes as given are minimum except as noted.

E. Materials and labor shall be new (unless noted or stated otherwise), first class, and workmanlike, and shall be subject at all times to the Owner's and/or Architect/Engineer's inspections, tests and approval from the commencement until the acceptance of the completed work.

F. Whenever a particular manufacturer's product is named, it is intended to establish a level of quality and performance requirements unless more explicit restrictions are stated to apply.

1.13 OMISSIONS

A. No later than ten (10) days before bid opening, the Contractor shall call the attention of the Owner to any materials or apparatus the Contractor believes to be inadequate and to any necessary items of work omitted.

1.14 SUBMITTALS

A. Refer to applicable sections in Bidding Requirements and Division 1 – General Requirements.

B. Submit for all equipment and systems as indicated in the respective specification sections, marking each submittal with that specification section number. Mark general catalog sheets and drawings to indicate specific items being submitted and proper identification of equipment by name and/or number, as indicated in the contract documents. Failure to do this may result in the submittal(s) being returned to the Contractor for correction and resubmission. Failing to follow these instructions does not relieve the Contractor from the requirement of meeting the project schedule.

C. On request from the Owner or Architect/Engineer, the successful bidder shall furnish additional drawings, illustrations, catalog data, performance characteristics, etc.

D. Submittals shall be grouped to include complete submittals of related systems, products, and accessories in a single submittal. Mark dimensions and values in units to match those specified. Include wiring diagrams of electrically powered equipment.

E. The submittals must be approved before fabrication is authorized.

1.15 PROJECT/SITE CONDITIONS

A. Install Work in locations shown on Drawings, unless prevented by Project conditions.

B. Prepare drawings showing proposed rearrangement of Work to meet Project conditions, including changes to Work specified in other Sections. Obtain permission of Owner before proceeding.

C. Tools, materials and equipment shall be confined to areas designated by the Owner.

1.16 WORK SEQUENCE AND SCHEDULING

A. Install work in phases to accommodate Owner's occupancy requirements. During the construction period coordinate electrical schedule and operations with Owner's Construction Representatives.

1.17 WORK BY OTHER TRADES

A. Every attempt has been made to indicate in this trade's specifications and drawings all work required of this Contractor. However, there may be additional specific paragraphs in other trade specifications and addenda, and additional notes on drawings for other trades which pertain to this Trade's work, and thus those additional requirements are hereby made a part of these specifications and drawings.

B. Electrical details on drawings for equipment to be provided by others are based on preliminary design data only. This Contractor shall lay out the electrical work and shall be responsible for its correctness to match equipment actually provided by others.

1.18 OFFSITE STORAGE

A. If payment will be requested for approved offsite stored material, then the Contractor shall complete an "Off-site Storage Agreement" which the Owner will consider on a case by case basis. Prior approval by Owner personnel for offsite storage will be needed. No material will be accepted for offsite storage unless submittals for the material have been approved.

1.19 REQUEST AND CERTIFICATE FOR PAYMENT

A. Refer to the General Conditions of the Contract for all payment request requirements. A cost breakdown of the proposed values for work performed which may be required by the Owner and if approved by the Owner, will become the basis for construction progress and monthly payments. The cost breakdown items shall reflect actual work progress stages as closely as feasible.

1.20 SALVAGE MATERIALS

A. No materials removed from this project shall be reused. All materials removed shall become the property of and shall be disposed of by the Contractor.

1.21 CERTIFICATES AND INSPECTIONS

A. Refer to the General Conditions for Certificates and Inspections.

B. This Contractor is responsible for coordination of Owner electrical inspection. Inspection requirements will be issued at a pre-installation meeting, arranged by this Contractor and the Electrical Inspector having jurisdiction.

1.22 OPERATION AND MAINTENANCE DATA

A. All operations and maintenance data shall comply with the submission and content requirements specified under applicable sections in Bidding Requirements and Division 1 - General Requirements.

B. In addition to the general content specified under applicable sections in Bidding Requirements and Division 1 - General Requirements supply the following additional documentation:
   1. Manufacturer’s wiring diagrams for electrically powered equipment.

1.23 RECORD DRAWINGS

A. The Contractor shall maintain at least one copy each of the specifications and drawings on the job site at all times.

B. The Owner or Engineer will provide the Contractor with a suitable set of contract drawings on which daily records of changes and deviations from contract shall be recorded. Dimensions and elevations on the record drawings shall locate all buried or concealed piping, conduit, or similar items.

C. The daily record of changes shall be the responsibility of Contractor's field superintendent. No arbitrary mark-ups will be permitted.

D. At completion of the project, the Contractor shall submit the marked-up record drawings to the Owner prior to final payment.

PART 2 PRODUCTS

2.1 ACCESS PANELS AND DOORS

A. Lay-in Ceilings:
   1. Removable lay-in ceiling tiles in 2 x 2 foot or 2 x 4 foot configuration provided under other divisions are sufficient; no additional access provisions are required unless specifically indicated.

B. Concealed Spline Ceilings:
   1. Removable sections of ceiling tile held in position with metal slats or tabs compatible with the ceiling system used will be provided under other divisions.

C. Metal Pan Ceilings:
   1. Removable sections of ceiling tile held in position by pressure fit will be provided under other divisions.

D. Plaster Walls and Ceilings:

1. 16 gauge frame with not less than a 20 gauge hinged door panel, prime coated steel for general applications, stainless steel for use in toilets, showers and similar wet areas, concealed hinges, screwdriver operated cam latch for general application, key lock for use in public areas, UL listed for use in fire rated partitions if required by the application. Use the largest size access opening possible, consistent with the space and the equipment needing service; minimum size is 12" by 12".

2.2 IDENTIFICATION

A. See Electrical Section 260553 – Identification for Electrical Systems.

2.3 SEALING AND FIRESTOPPING

A. Fire and/or Smoke Rated Penetrations:
   1. Whenever possible, avoid penetrations of fire and smoke rated partitions. When they cannot be avoided, verify that sufficient space is available for the penetration to be effectively fire and smoke stopped.

B. Manufacturers:
   1. 3M: www.3m.com.
   2. STI/SpecSeal: www.stifirestop.com.
   3. Tremco: www.tremcosealants.com.
   4. Hilti: www.hilti.com.

C. All firestopping systems shall be by the same manufacturer.

D. Submittals:
   1. Refer to applicable sections in Bidding Requirements and Division 1 - General Requirements.
   2. Contractor shall submit product data for each firestop system. Submittals shall include product characteristics, performance and limitation criteria, test data, MSDS sheets, installation details and procedures for each method of installation applicable to this project. For non-standard conditions where no UL tested system exists, submit manufacturer's drawings for UL system with known performance for which an engineering judgment can be based upon.

E. Product:
   1. Firestop systems shall be UL listed or tested by an independent testing laboratory approved by the Department of Commerce.

F. Use a product that has a rating not less than the rating of the wall or floor being penetrated. Reference architectural drawings for identification of fire and/or smoke rated walls and floors.

G. Contractor shall use firestop putty, caulk sealant, intumescent wrapstrips, intumescent firestop collars, firestop mortar or a combination of these products to provide a UL listed system for each application required for this project. Provide mineral wool backing where specified in manufacturer's application detail.

H. Non-Rated Penetrations:
   1. Conduit Penetrations Through Below Grade Walls:
      a. In exterior wall openings below grade, use a modular mechanical type seal consisting of interlocking synthetic rubber links shaped to continuously fill the annular space between the uninsulated conduit and the cored opening or a water-stop type wall sleeve.
   2. Conduit and Cable Tray Penetrations:
      a. At conduit and cable tray penetrations of non-rated interior partitions, floors and exterior walls above grade, use urethane caulk in annular space between conduit and sleeve, or the core drilled opening.

PART 3 EXECUTION

3.1 EXCAVATION AND BACKFILL

A. Perform all excavation and backfill work to accomplish indicated electrical systems installation in accordance with Division 31 - Trenching. Blasting will not be allowed without written permission of the Owner.

3.2 CONCRETE WORK

A. The Division 3 Contractor will perform all cast-in-place concrete unless noted otherwise elsewhere. Provide all layout drawings, anchor bolts, metal shapes, and/or templates required to be cast into concrete or used to form concrete for the support of electrical equipment.

3.3 CUTTING AND PATCHING

1. Refer to applicable sections in Bidding Requirements and Division 1 - General Requirements.

3.4 BUILDING ACCESS

A. Arrange for the necessary openings in the building to allow for admittance of all apparatus. When the building access was not previously arranged and must be provided by this Contractor, restore any opening to its original condition after the apparatus has been brought into the building.

3.5 EQUIPMENT ACCESS

A. Install all piping, conduit, ductwork, and accessories to permit access to equipment for maintenance. Coordinate the exact location of wall and ceiling access panels and doors with the General Contractor, making sure that access is available for all equipment and specialties. Where access is required in plaster or drywall walls or ceilings, furnish the access doors to the General Contractor and reimburse the General Contractor for installation of those access doors.

3.6 COORDINATION

A. The Contractor shall cooperate with other trades and Owner's personnel in locating work in a proper manner. Should it be necessary to raise or lower or move longitudinally any part of the electrical work to better fit the general installation, such work shall be done at no extra cost to the Owner, provided such decision is reached prior to actual installation. The Contractor shall check location of electrical outlets with respect to other installations before installing.

B. The Contractor shall verify that all devices are compatible for the surfaces on which they will be used. This includes, but is not limited to light fixtures, panelboards, devices, etc. and recessed or semi-recessed heating units installed in/on architectural surfaces.

C. Coordinate all work with other Contractors prior to installation. Any installed work that is not coordinated and that interferes with other Contractor's work shall be removed or relocated at the installing Contractor's expense.

D. Cooperate with the testing consultant in ensuring specification Section 260504 compliance. Verify system completion to the testing consultant. Demonstrate the starting, interlocking and control features of each system so the testing Contractor can perform its work.

3.7 SLEEVES

A. Pipe sleeves for conduits 6" in diameter and smaller, in new poured concrete construction, shall be schedule 40 steel pipe, plastic removable sleeve or sheet metal sleeve, all cast in place.

B. In wet area floor penetrations, top of sleeve to be 2 inches above the adjacent floor. In existing wet area floor penetrations, core drill sleeve openings large enough to insert schedule 40 sleeve and grout the area around the sleeve. If a pipe clamp resting on the sleeve supports the pipe penetrating the sleeve, weld a collar or struts to the sleeve that will transfer weight to the existing floor structure. Wet areas for this paragraph are rooms or spaces containing air handling unit coils, converters, pumps, chillers, boilers, and similar waterside equipment.

C. Pipe penetrations in existing concrete floors that are not in wet areas may omit the use of schedule 40 sleeve and use the core drilled opening as the sleeve.

3.8 SEALING AND FIRESTOPPING

A. Fire and/or Smoke Penetrations:
   1. Install approved product in accordance with the manufacturer's instructions where a pipe (i.e. cable tray, bus, cable bus, conduit, wireway, trough, etc.) penetrates a fire rated surface.

B. Where firestop mortar is used to infill large fire-rated floor openings that could be required to support weight, provide permanent structural forming. Firestop mortar alone is not adequate to support any substantial weight.

C. Non-Rated Surfaces:
   1. When the opening is through a non-fire rated wall, floor, ceiling or roof the opening must be sealed using an approved type of material.
   2. Install escutcheons or floor/ceiling plates where conduit, penetrates non-fire rated surfaces in occupied spaces. Occupied spaces for this paragraph include only those rooms with finished ceilings and the penetration occurs below the ceiling.
   3. In exterior wall openings below grade, assemble rubber links of mechanical seal to the proper size for the conduit and tighten in place, in accordance with the manufacturer's instructions. Install so that the bolts used to tighten the seal are accessible from the interior of the building or vault.
   4. At interior partitions, conduit penetrations are required to be sealed for all clean rooms, laboratories, and most hospital spaces, computer rooms, dormitory rooms, tele/data/com rooms and similar spaces where the room pressure or odor transmission must be controlled. Apply sealant to both sides of the penetration in such a manner that the annular space between the conduit sleeve and the conduit is completely filled.

3.9 HOUSEKEEPING AND CLEAN UP

A. The Contractor shall clean up and remove from the premises, on a daily basis, all debris and rubbish resulting from its work and shall repair all damage to new and existing equipment resulting from its work. When job is complete, this Contractor shall remove all tools, excess material and equipment, etc., from the site.

END OF SECTION

SECTION 260504

CLEANING, INSPECTION, AND TESTING OF ELECTRICAL EQUIPMENT

PART 1 GENERAL

1.1 SCOPE

A. The work under this section includes the required cleaning, repair, adjustment, calibration, maintenance and testing of electrical equipment, as specified herein. This applies only to new electrical and existing electrical equipment being furnished, modified, worked on or serviced by this Contractor for this project. Included are the following topics:
   1. PART 1 – GENERAL.
      a. Scope.
      b. Related Work.
   2. PART 2 – PRODUCTS.
      a. Not Used.
   3. PART 3 – EXECUTION.
      a. General Inspection and Cleaning of all Equipment.
      b. Grounding Systems.
      c. Mechanical and Electrical Interlock System.
      d. Dry Type Transformers.
      e. Cables.
      f. Panelboards.
      g. Light Fixtures.
      h. Occupancy Sensors.
      i. Battery Pack Emergency Lighting.

1.2 RELATED WORK

A. Applicable provisions of Division 1 govern work under this Section.

PART 2 PRODUCTS – NOT USED

PART 3 EXECUTION

3.1 GENERAL INSPECTION AND CLEANING OF ALL ELECTRICAL EQUIPMENT

A. Inspect for physical damage and abnormal mechanical and electrical conditions.

B. Any item found to be out of tolerance, or in any other way defective as a result of the required testing, shall be reported to the Engineer and Owner. Procedure for repair and/or replacement will be outlined. After appropriate corrective action is completed the item shall be re-tested.

C. Compare equipment nameplate information with the latest single line diagram and report any discrepancies.

D. Verify proper auxiliary device operation and indicators.

E. Check tightness of accessible bolted electrical joints. Use torque wrench method.

F. Make a close examination of equipment and remove any shipping brackets, insulation, packing, etc. that may not have been removed during original installation.

G. Make a close examination of equipment and remove any dirt or other forms of debris that may have collected in existing equipment or in new equipment during installation.

H. Clean All Equipment:
   1. Vacuum inside of panelboards, switchboards, switchgear, transformer core and coils, horizontal and vertical busducts, MCC's, fire alarm panels, comm/data, security panel, etc.
   2. Loosen attached particles and vacuum them away.
   3. Wipe all insulators with a clean, dry, lint free rag.
   4. Clean insulator grooves.

5. Re-vacuum inside surfaces as directed by the Owner’s Construction Representative or Inspector.

I. Inspect equipment anchorage.

J. Inspect equipment and bus alignment.

K. Check all heater elements for operation and control.

L. Lubricate nonelectrical equipment per manufacturer's recommendations.

3.2 GROUNDING SYSTEMS

A. Inspect the ground system for adequate termination at all devices.

3.3 MECHANICAL AND ELECTRICAL INTERLOCK SYSTEM

A. Physically test each system to ensure proper function, operation and sequencing.

B. Closure attempt shall be made on locked open devices.

C. Opening attempt shall be made on locked closed devices.

D. Key exchange shall be made with devices operated in off normal positions.

3.4 DRY TYPE TRANSFORMERS

A. Test and adjust the cooling fans, controls and alarm functions.

B. Measure secondary voltage phase-to-phase and phase-to-ground after final energization and prior to loading.

C. Verify and/or connect transformer "XO" to ground, load side of "WYE" systems.

3.5 CABLES

A. Visual and Mechanical Inspections:
   1. Inspect exposed sections for physical damage.
   2. Verify cable is supplied and connected in accordance with single line diagram.
   3. Inspect for shield grounding, cable support and termination.
   4. If cables are terminated through window type C.T.'s make an inspection to verify that neutrals and grounds are properly terminated for normal operation of protective devices.
   5. Inspect for visual jacket and insulation condition.
   6. Visible cable bends shall be checked against ICEA or manufacturer's minimum allowable bending radii -- 12 times the diameter for tape shielded cables.
   7. Inspect for proper fireproofing in common cable areas.
   8. There shall be NO tests performed on existing cable without specific direction from the Consulting Engineer.

B. Electrical Tests -- Below 600 Volts:
   1. All secondary cables from the substation transformers to the secondary switchboards shall be subjected to insulation tests using a 500 vdc megger.
   2. Visually inspect cables, lugs, connectors and all other components for physical damage and proper connections.
   3. Check all cable connectors for tightness (with a torque wrench) and clearances. Torque test conductor and bus terminations to manufacturer's recommendations.
   4. Check for proper grounding resistance at all services and at transformers. Resistance shall be 2 ohms maximum.
      a. Above 600 volts:
         1) Above 600 volt testing will be performed under a separate contract.

3.6 PANELBOARDS

A. Torque all the connections per the manufacturers spec. Verify phase wires, color coding, separate neutral and mechanical bonding. Verify circuit breaker operation. Verify the directory.

3.7 LIGHT FIXTURES

A. Check the bonding and proper lamping. Verify that recessed fixtures are installed with hold down clips. Confirm operation of the fixture with the proper switch or sensor.

3.8 OCCUPANCY SENSORS

A. Confirm operation of the sensor per the manufacturers spec.

3.9 BATTERY PACK EMERGENCY LIGHTING

A. Verify the operation per the manufacturers spec and run all of the diagnostic steps. Confirm proper grounding and location.

END OF SECTION

INTENTIONALLY LEFT BLANK

SECTION 260519

LOW-VOLTAGE ELECTRICAL POWER CONDUCTORS AND CABLES

PART 1 GENERAL

1.1 SCOPE

A. The work under this section includes furnishing and installing required wiring and cabling systems including pulling, terminating and splicing. Included are the following topics:
   1. PART 1 – GENERAL.
      a. Scope.
      b. Related Work.
      c. References.
      d. Submittals.
      e. Project Conditions.
   2. PART 2 – PRODUCTS.
      a. General.
      b. Building Wire.
      c. Underground Wire for Exterior Work.
      d. Wiring Connectors.
   3. PART 3 – EXECUTION.
      a. General Wiring Methods.
      b. Wiring Installation In Raceways.
      c. Wiring Connections and Terminations.
      d. Field Quality Control.
      e. Wire Color.
      f. Branch Circuits.
      g. Emergency Circuits.

1.2 RELATED WORK

A. Applicable provisions of Bidding Requirements and Division 1 - General Requirements govern work under this section.

B. Section 260533 – Raceway and Boxes for Electrical Systems.

C. Section 260553 – Identification for Electrical Systems.

1.3 REFERENCES

A. NFPA 70 - National Electrical Code.

1.4 SUBMITTALS

A. Refer to applicable sections of Bidding Requirements and Division 1 - General Requirements.

B. Submit product data: Provide for each cable assembly type.

C. Submit factory test reports: Indicate procedures and values obtained.

D. Submit shop drawings for modular wiring system including layout of distribution devices, branch circuit conduit and cables, circuiting arrangement, and outlet devices.

E. Submit manufacturer's installation instructions. Indicate application conditions and limitations of use stipulated by product testing agency specified under Regulatory Requirements.

1.5 PROJECT CONDITIONS

A. Verify that field measurements are as shown on Drawings.

B. Conductor sizes are based on copper.

C. Wire and cable routing shown on Drawings is approximate unless dimensioned. Route wire and cable as required to meet project conditions.

D. Where wire and cable routing is not shown, and destination only is indicated, determine exact routing and lengths required.

PART 2 PRODUCTS

2.1 GENERAL

A. All wire shall be new, delivered to the site in unbroken cartons and shall be less than one year old out of manufacturer's stock.

B. All conductors shall be copper.

C. Insulation shall have a 600 volt rating.

D. All conductors shall be stranded.
   1. Stranded conductors may only be terminated with UL OR ETL Listed type terminations or methods: e.g. stranded conductors may not be wrapped around a terminal screw but must be terminated with a crimp type device or must be terminated in an approved back wired method.

2.2 BUILDING WIRE

A. Description: Single conductor insulated wire.

B. Insulation: Type THHN/THWN, XHHW-2 insulation for feeders and branch circuits.

2.3 UNDERGROUND WIRE FOR EXTERIOR WORK

A. Description: Stranded single or multiple conductor insulated wire.

B. Insulation: Type XHHW-2 or USE.

C. This wiring shall be used in all underground applications, except when run in a concrete-encased ductbank.

2.4 WIRING CONNECTORS

A. Split Bolt Connectors: Not acceptable.

B. Solderless Pressure Connectors: High copper alloy terminal. May be used only for cable termination to equipment pads or terminals. Not approved for splicing.

C. Spring Wire Connectors: Solderless spring type pressure connector with insulating covers for copper wire splices and taps. Use for conductor sizes 10 AWG and smaller.

D. All wire connectors used in underground or exterior pull boxes shall be gel filled twist connectors or a connector designed for damp and wet locations.

E. Mechanical Connectors: Bolted type tin-plated; high conductivity copper alloy; spacer between conductors; beveled cable entrances.

F. Compression (crimp) Connectors: Long barrel; seamless, tin-plated electrolytic copper tubing; internally beveled barrel ends. Connector shall be clearly marked with the wire size and type and proper number and location of crimps. Connector shall be irreversible type meeting IEEE Standard 837-2002, UL Listed.

PART 3 EXECUTION

3.1 GENERAL WIRING METHODS

A. All wire and cable shall be installed in conduit.

B. Do not use wire smaller than 12 AWG for power and lighting circuits.

C. All conductors shall be sized to prevent excessive voltage drop at rated circuit ampacity. As a minimum use 10 AWG conductor for 20 ampere, 120 volt branch circuit home runs longer than 100 feet (30 m), and for 20 ampere, 277 volt branch circuit home runs longer than 200 feet (61 m).

D. Make conductor lengths for parallel conductors equal.

E. Splice only in junction or outlet boxes.

F. No conductor less than 10 AWG shall be installed in exterior underground conduit.

G. Identify ALL low voltage, 600v and lower, wire per section 260553.

H. Neatly train and lace wiring inside boxes, equipment, and panelboards.

3.2 WIRING INSTALLATION IN RACEWAYS

A. Pull all conductors into a raceway at the same time. Use Listed wire pulling lubricant for pulling 4 AWG and larger wires and for other conditions when necessary.

B. Install wire in raceway after interior of building has been physically protected from the weather and all mechanical work likely to injure conductors has been completed.

C. Completely and thoroughly swab raceway system before installing conductors.

D. Place all conductors of a given circuit (this includes phase wires, neutral (if any), and ground conductor) in the same raceway. If parallel phase and/or neutral wires are used, then place an equal number of phase and neutral conductors in same raceway or cable.

E. VFD Installations: Install VFD input wiring and output wiring in separate conduit systems. Do not mix VFD input power and output power, or control wiring in a common raceway.

3.3 WIRING CONNECTIONS AND TERMINATIONS

A. Splice only in accessible junction boxes.

B. Wire splices and taps shall be made firm, and adequate to carry the full current rating of the respective wire without soldering and without perceptible temperature rise.

C. All splices shall be so made that they have an electrical resistance not in excess of two feet (600 mm) of the conductor.

D. Use solderless spring type pressure connectors with insulating covers for wire splices and taps, 10 AWG and smaller.

E. Use mechanical or compression connectors for wire splices and taps, 8 AWG and larger. Tape uninsulated conductors and connectors with electrical tape to 150 percent of the insulation value of conductor.

F. Thoroughly clean wires before installing lugs and connectors.

G. At all splices and terminations, leave tails long enough to cut splice out and completely re-splice.

3.4 FIELD QUALITY CONTROL

A. Field inspection and testing will be performed under provisions of Section 260504.
   1. Additional testing as follows shall be performed if aluminum conductors are used:
      a. Equipment terminated with aluminum conductors shall be tested with a thermal imager and recorded.
      b. Conductors shall be closely checked for loose or poor connections, and for signs of overheating or corrosion.
      c. Test procedures shall meet NETA guidelines.
      d. Test results and report shall be provided to the engineer.
      e. Contractor shall correct all deficiencies reported in the test report.

3.5 WIRE COLOR

A. General:
   1. For wire sizes 10 AWG and smaller - Wire shall be colored as indicated below.
   2. For wire sizes 8 AWG and larger – Use colored wire, or identify wire with colored tape at all terminals, splices and boxes. Colors to be as indicated below.
   3. In existing facilities, use existing color scheme.
   4. In new facilities, use black and red for single phase circuits at 120/240 volts, use Phase A black, Phase B red and Phase C blue for circuits at 120/208 volts single or three phase, and use Phase A brown, Phase B orange and Phase C yellow for circuits at 277/480 volts single or three phase. Note: This includes fixture whips except for Listed whips mounted by the fixture manufacturer on the fixture and Listed as a System.
   5. All switch legs shall be the same color as their associated circuit. Traveler conductors run between 3 and 4 way switches shall be colored pink or purple.

B. Neutral Conductors: White for 120/208V and 120/240V systems, Gray for 277/480V systems. Where there are two or more neutrals in one conduit, each shall be individually identified with a different stripe.

C. Branch Circuit Conductors: Three or four wire home runs shall have each phase uniquely color coded.

D. Feeder Circuit Conductors: Each phase shall be uniquely color coded.

E. Ground Conductors: Green for 6 AWG and smaller. For 4 AWG and larger, identify with green colored wire, or with green tape at both ends and at all access points, such as panelboards, motor starters, disconnects and junction boxes. When isolated grounds are required, Contractor shall provide green with yellow tracer.

3.6 BRANCH CIRCUITS

A. The use of single-phase, multi-wire branch circuits with a common neutral is not permitted. All branch circuits shall be furnished and installed with an individual accompanying neutral, sized the same as the phase conductors.

3.7 EMERGENCY CIRCUITS

A. All emergency system wiring (level 1 and level 2) shall be installed in separate raceways after their associated transfer switches. The wiring shall be separate from each other and from all normal system wiring.

END OF SECTION

SECTION 260523

CONTROL-VOLTAGE ELECTRICAL POWER CABLES

PART 1 GENERAL

1.1 SCOPE

A. The work under this section includes furnishing and installing required remote control and signal cabling. Included are the following topics:
   1. PART 1 - GENERAL.
      a. Scope.
      b. Related Work.
      c. References.
      d. Submittals.
      e. Project Conditions.
   2. PART 2 - PRODUCTS.
      a. General.
      b. Remote Control and Signal Cable.
      c. Wiring Connectors.
   3. PART 3 - EXECUTION.
      a. General Wiring Methods.
      b. Wiring Installation In Raceways.
      c. Free-Air Cable Installation.
      d. Wiring Connections and Terminations.
      e. Field Quality Control.

1.2 RELATED WORK

A. Applicable provisions of Division 1 govern work under this Section.

B. Section 260533 - Raceway and Boxes for Electrical Systems.

C. Section 260553 - Identification for Electrical Systems.

1.3 REFERENCES

A. NFPA 70 - National Electrical Code.

1.4 SUBMITTALS

A. Refer to applicable sections in Bidding Requirements and Division 1 - General Requirements, for submittal procedures.

B. Submit product data: Provide for each cable assembly type.

C. Submit manufacturer's installation instructions. Indicate application conditions and limitations of use stipulated by product testing agency specified under Regulatory Requirements.

1.5 PROJECT CONDITIONS

A. Verify that field measurements are as shown on Drawings.

B. Conductor sizes are based on copper.

C. Wire and cable routing shown on Drawings is approximate unless dimensioned. Route wire and cable as required to meet Project Conditions.

D. Where wire and cable routing is not shown, and destination only is indicated, determine exact routing and lengths required.

PART 2 PRODUCTS

2.1 GENERAL

A. All wire shall be new, delivered to the site in unbroken cartons and shall be less than one year old out of manufacturer's stock.

B. All conductors shall be copper.

C. Insulation shall have a 600 volt rating.

D. All conductors must be suitable for the application intended. Conductors #12 and smaller may be solid or stranded with the following requirements or exceptions:
   1. All conductors terminated with crimp type devices must be stranded.
   2. Stranded conductors may only be terminated with UL OR ETL Listed type terminations or methods: e.g. stranded conductors may not be wrapped around a terminal screw but must be terminated with a crimp type device or must be terminated in an approved back wired method.

2.2 REMOTE CONTROL AND SIGNAL CABLE

A. Refer to Section 283100 for requirements for cable to be used on fire alarm systems.

B. Refer to Drawings for requirements for cable to be used on communication systems.

C. All other systems cabling shall meet the requirements of NEC Article 725 and the following:
   1. Control Cable for Class 1 Remote Control and Signal Circuits: 600 volt insulation, individual conductors twisted together, shielded, and covered with an overall PVC jacket. Cable shall be Listed, temperature rated, and plenum or non-plenum rated for the application as required in the National Electrical Code.
   2. Control Cable for Class 2 or Class 3 Remote Control and Signal Circuits shall be constructed, Listed, temperature rated, and plenum or non-plenum rated for the application as required in the NEC Article 725.

2.3 WIRING CONNECTORS

A. Split Bolt Connectors: Not acceptable.

B. Spring Wire Connectors: Solderless spring type pressure connector with insulating covers for copper wire splices and taps. Use for conductor sizes 10 AWG and smaller.

C. All wire connectors used in underground or exterior pull boxes shall be gel filled twist connectors or a connector designed for damp and wet locations.

PART 3 EXECUTION

3.1 GENERAL WIRING METHODS

A. Low voltage control and signal cables shall be installed in conduit. However, they may be installed without conduit above accessible ceilings if the cable meets NEC requirements for the application, unless specified to be in conduit in other sections of the specifications. See requirements for free-air cabling installation below.

B. Control cables for controlling HVAC and lighting equipment connected to emergency power shall be routed in raceway.

C. Do not use wire smaller than 14 AWG for control wiring greater than 60 volts, or 18 AWG for voltages less than 60 volts, all sizes subject to NEC 725 requirements.

D. Splice only in junction boxes.

E. Identify wire per section 260553.

F. Neatly train and lace wiring inside boxes, and equipment.

3.2 WIRING INSTALLATION IN RACEWAYS

A. Pull all conductors into a raceway at the same time. Use Listed wire pulling lubricant for pulling conditions when necessary.

B. Install wire in raceway after interior of building has been physically protected from the weather and all mechanical work likely to injure conductors has been completed.

C. Completely and thoroughly swab raceway system before installing conductors.

3.3 FREE-AIR CABLE INSTALLATION

A. When permitted in exposed ceiling areas, 'Free-Air' wiring runs shall avoid areas of high traffic (i.e. aisle way), shall be run as close as possible to outlining walls and shall be a minimum of ten (10) feet above finished floor.

B. Cabling shall be neatly run at right angles and be kept clear of other trades work.

C. Cabling shall be supported at a maximum of 4-foot intervals utilizing 'bridal-type' mounting rings anchored to ceiling concrete, piping supports or structural steel beams. If cable sag at mid-span exceeds 12-inches, another support shall be provided. Mounting rings shall be designed to maintain cables bend to larger than the minimum bed radius (typically 4 x cable diameter).

D. Cabling shall not be attached to or supported by existing cabling, plumbing or steam piping, ductwork, suspended ceiling supports or electrical conduit. Additionally, cabling shall not be laid directly on the ceiling grid.

E. To reduce or eliminate Electro-Magnetic Interference (EMI), the following minimum separation distances for 'Free-Air' cabling installations shall be adhered to:
   1. Twelve (12) inches from power lines of less than 5kV.
   2. Thirty-nine (39) inches from power lines of 5kV or greater.
   3. Eighteen (18) inches from lighting fixtures.
   4. Thirty-nine (39) inches from transformers and motors.

F. A coil of 2 feet in each cable shall be placed in the ceiling at each 'free-air' wired device. These coils shall be secured (wire tied) at the last cable support before the cable reaches the device and shall be coiled from 100% to 200% of the cable recommended minimum bend radius.

G. All cable shall be free of tension at both ends. Nylon strain relief connectors shall be provided at each device and junction box where cables enter. In cases where the cable must bear some stress, Kellum type grips may be used to spread the strain over a longer length of cable.

H. Cable manufacturers minimum bend radius shall be observed in all instances. Care should be taken in the use of cable ties to secure and anchor the station cabling. Ties should not be over tightened as to compress the cable jacket. No sharp burrs should remain where excess length of the cable tie has been cut.

I. All exposed vertical cable extensions to devices located below the finished ceiling shall be in conduit.

J. Provide protection for exposed cables where subject to damage.

K. Use suitable cable fittings and connectors.

3.4 WIRING CONNECTIONS AND TERMINATIONS

A. Splice only in accessible junction boxes.

B. All splices shall be so made that they have an electrical resistance not in excess of two feet (600 mm) of the conductor.

C. Use solderless spring type pressure connectors with insulating covers for wire splices and taps, 10 AWG and smaller.

D. Thoroughly clean wires before installing lugs and connectors.

E. At all splices and terminations, leave tails long enough to cut splice out and completely re-splice.

3.5 FIELD QUALITY CONTROL

A. Field inspection and testing will be performed under provisions of Section 260504.

END OF SECTION

SECTION 260526

GROUNDING AND BONDING FOR ELECTRICAL SYSTEMS

PART 1 GENERAL

1.1 SCOPE

A. The work under this section includes grounding electrodes and conductors, equipment grounding conductors, and bonding. Included are the following topics:

1. PART 1 - GENERAL.
   a. Scope.
   b. Related Work.
   c. References.
   d. Performance Requirements.
   e. Submittals.
   f. Project Record Documents.
   g. Regulatory Requirements.
2. PART 2 - PRODUCTS.
   a. Rod Electrode.
   b. Mechanical Connectors.
   c. Compression Connectors.
   d. Exothermic Connections.
   e. Wire.
   f. Bus.
3. PART 3 - EXECUTION.
   a. Examination.
   b. General.
   c. Less Than 600 Volt System Grounding.
   d. Field Quality Control.

1.2 RELATED WORK

A. Applicable provisions of Bidding Requirements and Division 1 - General Requirements govern work under this Section.

1.3 REFERENCES

A. NFPA 70 - National Electrical Code.

B. ANSI/IEEE 142 (Latest edition) - Recommended Practice for Grounding of Industrial and Commercial Power Systems.

1.4 PERFORMANCE REQUIREMENTS

A. Grounding System Resistance: 2 ohms maximum at building service entrance.

B. Testing of grounding system resistance is to be witnessed by the Engineer / Owner Representative. Provide test report of grounding system resistance in final O&M manuals.

1.5 SUBMITTALS

A. Refer to applicable sections in Bidding Requirements and Division 1 - General Requirements.

B. Product Data: Provide data for grounding electrodes and connections.

C. Test Reports: Indicate overall resistance to ground and resistance of each electrode.

D. Manufacturer's Instructions: Include instructions for preparation, installation and examination of exothermic connectors.

1.6 PROJECT RECORD DOCUMENTS

A. Accurately record actual locations of grounding electrodes.

1.7 REGULATORY REQUIREMENTS

A. Conform to requirements of NFPA 70.

B. Furnish products listed and classified by Underwriters Laboratories, Inc. or testing firm acceptable to authority having jurisdiction as suitable for purpose specified and shown.

PART 2 PRODUCTS

2.1 ROD ELECTRODE

A. Material: Copper-clad steel.

B. Diameter: 3/4 inch (19 mm) minimum.

C. Length: 10 feet (3.5 m) minimum. Rod shall be driven at least 9' 6" deep.

2.2 MECHANICAL CONNECTORS

A. The mechanical connector bodies shall be manufactured from high strength; high conductivity cast copper alloy material. Bolts, nuts, washers and lock washers shall be made of Silicon Bronze and supplied as a part of the connector body and shall be of the two bolt type.

B. Split bolt connector types are NOT allowed. Exception: The use of split bolts is acceptable for grounding of wire-basket type cable tray, and for cable shields/straps of medium voltage cable.

C. The connectors shall meet or exceed UL 467 and be clearly marked with the catalog number, conductor size and manufacturer.

2.3 COMPRESSION CONNECTORS

A. The compression connectors shall be manufactured from pure wrought copper. The conductivity of this material shall be no less than 99% by IACS standards.

B. The connectors shall meet or exceed the performance requirements of IEEE 837, latest revision.

C. The installation of the connectors shall be made with a compression, tool and die system, as recommended by the manufacturer of the connectors.

D. The connectors shall be clearly marked with the manufacturer, catalog number, conductor size and the required compression tool settings.

E. Each connector shall be factory filled with an oxide-inhibiting compound.

2.4 EXOTHERMIC CONNECTIONS

A. Manufacturers:
   1. Cadweld: www.Cadweld.com.

2.5 WIRE

A. Material: Stranded copper (aluminum not permitted).

B. Grounding Electrode Conductor: Size as shown on drawings, specifications or as required by NFPA 70, whichever is larger.

C. Foundation Electrodes: As shown on drawings.

D. Primary Manhole, Main Switchgear room and Vault Bonding: No. 4/0 minimum.

E. Feeder and Branch Circuit Equipment Ground: Size as shown on drawings, specifications or as required by NFPA 70, whichever is larger. Differentiate between the normal ground and the isolated ground when both are used on the same facility.

2.6 BUS

A. Material: Copper (aluminum not permitted).

B. Size: 1/4" X 2" minimum.

PART 3 EXECUTION

3.1 EXAMINATION

A. Verify that final backfill and compaction has been completed before driving rod electrodes.

3.2 GENERAL

A. Install Products in accordance with manufacturer's instructions.

B. Mechanical connections shall be accessible for inspection and checking. No insulation shall be installed over mechanical ground connections.

C. Ground connection surfaces shall be cleaned and all connections shall be made so that it is impossible to move them.

D. Attach grounds permanently before permanent building service is energized.

E. All grounding electrode conductors shall be installed in PVC conduit, in exposed locations.

3.3 LESS THAN 600 VOLT SYSTEM GROUNDING

A. Supplementary Grounding Electrode: Use driven ground rod on exterior of building or effectively grounded metal frame of the building.

B. Provide code sized copper grounding electrode conductor from secondary switchboard ground bus, each separately derived system neutral, secondary service system neutral to street side of water meter, building steel, ground rod, and any concrete encased electrodes. Provide bonding jumper around water meter.

C. Bond together system neutrals, service equipment enclosures, exposed non-current carrying metal parts of electrical equipment, metal raceway systems, grounding conductor in raceways and cables, receptacle ground connectors, and plumbing systems.

D. Install ground grid under access floors where indicated. Construct grid of #4 AWG bare copper wire installed on 72 inch centers both ways. Bond each access floor support pedestal to grid.

E. Bond together each metallic raceway, pipe, duct and other metal object entering space under access floors. Bond to under floor ground grid. Use #4 AWG bare copper conductor.

F. Equipment Grounding Conductor: Provide separate, insulated equipment grounding conductor within each raceway. Terminate each end on suitable lug, bus, enclosure or bushing. Provide a ground wire from each device to the respective enclosure.

G. Provide communications system grounding conductor at point of service entrance and connect to building common grounding electrode system.

H. Telecommunications and Audio Visual systems shall be installed with an isolated grounding system which has only one ground point. That ground point is to be the common grounding electrode system at the electrical service entrance for the building. Contractor is to provide an isolated grounding conductor from the electrical service entrance of the building to each Telecommunications Grounding Bus Bar (TGBB) in each Telecommunication Room. Use a minimum No. 2/0 AWG copper conductor, or as indicated on the plans, for the telecommunications service grounding conductor. Leave 10 feet slack grounding conductor at each Telecommunications Room. The grounding conductor MUST NOT be attached to building steel (except as allowed at the main electrical service entrance).

I. Telecommunications Equipment Rack Grounding: Use a #6 or larger AWG copper conductor from all telecommunications cabinets and racks to the Telecommunications Grounding Bus Bar (TGBB) in each Telecommunication Room.

3.4 FIELD QUALITY CONTROL

A. Inspect grounding and bonding system conductors and connections for tightness and proper installation.

END OF SECTION

SECTION 260529

HANGERS AND SUPPORTS FOR ELECTRICAL SYSTEMS

PART 1 GENERAL

1.1 SCOPE

A. The work under this section includes conduit and equipment supports, straps, clamps, steel channel, etc, and fastening hardware for supporting electrical work. Included are the following topics:
   1. PART 1 – GENERAL.
      a. Scope.
      b. Related Work.
      c. Submittals.
      d. Quality Assurance.
   2. PART 2 – PRODUCTS.
      a. Material.
   3. PART 3 – EXECUTION.
      a. Installation.

1.2 RELATED WORK

A. Applicable provisions of Bidding Requirements and Division 1 - General Requirements govern work under this section.

1.3 SUBMITTALS

A. Refer to applicable sections in Bidding Requirements and Division 1 - General Requirements.

B. Product Data: Provide data for support channel.

1.4 QUALITY ASSURANCE

A. Support systems shall be adequate for weight of equipment and conduit, including wiring, which they carry.

PART 2 PRODUCTS

2.1 MATERIAL

A. Support Channel: Steel, Galvanized, Enameled or other corrosion resistant.

B. Hardware: Corrosion resistant.

C. Minimum sized threaded rod for supports shall be 3/8” for trapezes and single conduits 1-1/4” and larger, and 1/4” for single conduits 1” and smaller.

D. Conduit clamps, straps, supports, etc., shall be steel or malleable iron. One-hole straps shall be heavy duty type. All straps shall have steel or malleable backing plates when rigid steel conduit is installed on the interior or exterior surface of any exterior building wall.

PART 3 EXECUTION

3.1 INSTALLATION

A. Fasten hanger rods, conduit clamps, outlet, junction and pull boxes to building structure using pre-cast insert system, preset inserts, beam clamps, expansion anchors, or spring steel clips (interior metal stud walls only).

B. Use toggle bolts or hollow wall fasteners in hollow masonry, plaster, or gypsum board partitions and walls; expansion anchors or preset inserts in solid masonry walls; self-drilling anchors or expansion anchors on concrete surfaces; sheet metal screws in sheet metal studs and wood screws in wood construction. If nail-in anchors are used, they must be removable type anchors.

C. **Powder-actuated fasteners and plastic wall anchors are not permitted.**

D. File and de-bur cut ends of support channel and spray paint with cold galvanized paint to prevent rusting.

E. Do not fasten supports to piping, ductwork, mechanical equipment, cable tray or conduit. Do not fasten to suspended ceiling grid system.

F. Do not drill structural steel members unless approved by Owner.

G. Fabricate supports from galvanized structural steel or steel channel, rigidly welded or bolted to present a neat appearance. Use hexagon head bolts with spring lock washers under all nuts.

H. In wet locations, mechanical rooms and electrical rooms install free-standing electrical equipment on 3.5 inch concrete pads.

I. Install surface-mounted cabinets and panelboards with minimum of four anchors. Provide steel channel supports to stand cabinet one inch off wall (7/8” Uni-strut or 3/4” painted, fire-retardant plywood is acceptable).

J. Bridge studs top and bottom with channels to support flush-mounted cabinets and panelboards in stud walls.

K. Furnish and install all supports as required to fasten all electrical components required for the project, including free standing supports required for those items remotely mounted from the building structure, catwalks, walkways etc.

END OF SECTION

SECTION 260533

RACEWAY AND BOXES FOR ELECTRICAL SYSTEMS

PART 1 GENERAL

1.1 SCOPE

A. The work under this section includes conduits, surface raceways, multi-outlet assemblies, auxiliary gutters, wall duct, and boxes for electrical systems including wall and ceiling outlet boxes, floor boxes, and junction boxes. Included are the following topics:
   1. PART 1 - GENERAL.
      a. Scope.
      b. Related Work.
      c. Submittals.
   2. PART 2 - PRODUCTS.
      a. Rigid Metal Conduit and Fittings.
      b. PVC Coated Rigid Metal Conduit.
      c. Intermediate Metal Conduit (IMC) and Fittings.
      d. Electrical Metallic Tubing (EMT) and Fittings.
      e. Flexible Metal Conduit and Fittings.
      f. Liquidtight Flexible Metal Conduit and Fittings.
      g. Rigid Nonmetallic Conduit and Fittings
      h. Conduit Supports.
      i. Auxiliary Gutters (Wireways).
      j. Outlet Boxes.
      k. Floor Boxes.
      l. Pull and Junction Boxes.
      m. General.
   3. PART 3 - EXECUTION.
      a. Conduit Sizing, Arrangement and Support.
      b. Conduit Installation.
      c. Conduit Installation Schedule.
      d. Coordination of Box Locations.
      e. Outlet Box Installation.
      f. Floor Box Installation.
      g. Pull and Junction Box Installation.

1.2 RELATED WORK

A. Applicable provisions of Bidding Requirements and Division 1 - General Requirements govern work under this section.

B. Section 260529 - Hangers and Supports for Electrical Systems.

C. Section 262726 - Wiring Devices.

D. Section 262702 - Equipment Wiring Systems.

E. Division 27, for Communications Cable and Equipment.

1.3 SUBMITTALS

A. Refer to applicable sections in Bidding Requirements and Division 1 - General Requirements.

B. Surface Raceway System - submit product data and catalog sheets for all components.

C. Boxes - provide product data showing configurations, finishes, dimensions, and manufacturer's instructions.

PART 2 PRODUCTS

2.1 RIGID METAL CONDUIT AND FITTINGS

A. Conduit: Heavy wall, galvanized steel, schedule 40, threaded.

B. Fittings and Conduit Bodies: Use all steel threaded fittings and conduit bodies.

2.2 PVC COATED RIGID METAL CONDUIT

A. PVC Externally Coated Conduit: Rigid heavy wall, schedule 40, steel conduit with external 40 mil PVC coating. Conduit must be hot dipped galvanized inside and out including threads. The PVC coating bond to the galvanized steel conduit shall be stronger than the tensile strength of the coating itself.

B. Fittings and Conduit Bodies: Threaded type, material to match conduit. PVC coated fittings and couplings shall have specially formed sleeves to tightly seal to conduit PVC coating. The sleeves shall extend beyond the fitting or coupling a distance equal to the pipe outside steel diameter or two inches whichever is greater.

2.3 INTERMEDIATE METAL CONDUIT (IMC) AND FITTINGS

A. Conduit: Galvanized steel, threaded.

B. Fittings and Conduit Bodies: Use all steel threaded fittings and conduit bodies.

2.4 ELECTRICAL METALLIC TUBING (EMT) AND FITTINGS

A. Conduit: Steel, galvanized tubing.

B. Fittings: All steel, set screw, concrete tight. No push-on or indenter types permitted.

C. Conduit Bodies: All steel threaded conduit bodies.

2.5 FLEXIBLE METAL CONDUIT AND FITTINGS

A. Conduit: Steel, galvanized, spiral strip.

B. Fittings and Conduit Bodies: All steel, galvanized, or malleable iron (except as allowed in specification 265113).

2.6 LIQUIDTIGHT FLEXIBLE METAL CONDUIT AND FITTINGS

A. Conduit: Flexible, steel, galvanized, spiral strip with an outer Liquidtight, nonmetallic, sunlight-resistant jacket.

B. Fittings and Conduit Bodies: ANSI/NEMA FB 1, compression type. There shall be a metallic cover/insert on the end of the conduit inside the connector housing to seal the cut conduit end.

2.7 RIGID NONMETALLIC CONDUIT AND FITTINGS

A. Conduit: Schedule 40 PVC minimum, Listed, sunlight resistant, rated for 90 ˚C conductors.

B. Fittings and Conduit Bodies: NEMA TC 2, Listed.

2.8 CONDUIT SUPPORTS

A. See Section 260529.

2.9 AUXILIARY GUTTERS (WIREWAYS)

A. Description: Oil-tight and dust- tight type wireway without knockouts.

B. Size: as required.

C. Cover: Screw applied

D. Connector: screw applied cover.

E. Fittings: Lay-in type with removable top, bottom, and side; captive screws. Finish: Rust inhibiting primer coat with gray enamel finish.

2.10 OUTLET BOXES

A. Sheet Metal Outlet Boxes: Galvanized steel, with stamped knockouts.

B. Luminaire and Equipment Supporting Boxes: Rated for weight of equipment supported; include 3/8 inch male fixture studs where required.

C. Concrete Ceiling Boxes: Concrete type.

D. Cast Boxes: Cast ferroalloy, or aluminum type deep type, gasketed cover, threaded hubs.

2.11 FLOOR BOXES

A. Floor Boxes for Installation in Cast-In-Place Concrete Floors: Full adjustable.

2.12 PULL AND JUNCTION BOXES

A. Pull boxes and junction boxes shall be minimum 4 inch square by 2-1/8 inches deep for use with 1 inch conduit and smaller. On conduit systems using 1-1/4 inch conduit or larger, pull and junction boxes shall be sized per NEC but not less than 4-11/16 inch square.

B. For telecommunication, fiber optic, security, and other low voltage cable installations the NEC box size requirements shall apply. All boxes, used on telecommunication, security, other low voltage and fiber optic systems with conduits of 1-1/4 inch and larger, shall be sized per the NEC conduit requirements. For determining box size, the conduit is the determining factor not the wire size.

C. Sheet Metal Boxes: Code gauge galvanized steel, screw covers, flanged and spot welded joints and corners.

D. Sheet Metal Boxes Larger than 12 inches in any dimension shall have a hinged cover or a chain installed between box and cover.

E. Cast Metal Boxes for Outdoor and Wet Location Installations: Type 4 and Type 6, flat-flanged, surface-mounted junction box, UL listed as raintight. Galvanized cast iron or aluminum box and cover with ground flange, neoprene gasket, and stainless steel cover screws.

F. Fiberglass or Concrete Handholes with weatherproof cover of non-skid finish shall be used for underground installations.

G. Box extensions and adjacent boxes within 48 inches of each other are not allowed for the purpose of creating more wire capacity.

H. Junction boxes 6" x 6" or larger size shall be without stamped knock-outs.

I. Wireways shall not be used in lieu of junction boxes.

2.13 GENERAL

A. All steel fittings and conduit bodies shall be galvanized.

B. No cast metal or split-gland type fittings permitted.

C. Mogul-type condulets larger than 2 inch not permitted except as approved or detailed.

D. All condulet covers must be fastened to the condulet body with screws and be of the same manufacturer.

E. Wireways, gutters and c-condulets shall not be used in lieu of pull boxes and condulets.

F. All boxes shall be of sufficient size to provide free space for all conductors enclosed in the box and shall comply with NEC requirements.

PART 3 EXECUTION

3.1 CONDUIT SIZING, ARRANGEMENT, AND SUPPORT

A. EMT is permitted to be used in sizes 4 inch and smaller for power and telecommunication systems. See CONDUIT INSTALLATION SCHEDULE below for other limitations for EMT and other types of conduit.

B. Size power conductor raceways for conductor type installed. Conduit size shall be 1/2 inch minimum except all homerun conduits shall be 3/4 inch, or as specified elsewhere. Caution: Per the NEC, the allowable conductor ampacity is reduced when more than three current-carrying conductors are installed in a raceway. Contractor must take the NEC ampacity adjustment factors into account when sizing the raceway and wiring system.

C. Size conduit for all other wiring, including but not limited to data, control, security, fire alarm, telecommunications, signal, video, etc. shall be sized per number of conductors pulled and their cross-section. 40% fill shall be maximum for all new conduit fills.

D. Arrange conduit to maintain headroom and present a neat appearance.

E. Route exposed conduit and conduit above accessible ceilings parallel and perpendicular to walls and adjacent piping.

F. Maintain minimum 6 inch clearance between conduit and piping. Maintain 12 inch clearance between conduit and heat sources such as flues, steam pipes, and heating appliances.

G. Arrange conduit supports to prevent distortion of alignment by wire pulling operations. Fasten conduit using galvanized pipe straps, conduit racks (lay-in adjustable hangers), clevis hangers, or bolted split stamped galvanized hangers.

H. Group conduit in parallel runs where practical and use conduit rack (lay-in adjustable hangers) constructed of steel channel with conduit straps or clamps. Provide space for 25 percent additional conduit.

I. Do not fasten conduit with wire or perforated pipe straps. Before conductors are pulled, remove all wire used for temporary conduit support during construction.

J. Support and fasten metal conduit at a maximum of 8 feet on center.

K. Supports shall be independent of the installations of other trades, e.g. ceiling support wires, HVAC pipes, other conduits, etc., unless so approved or detailed.

L. In general, all conduit shall be concealed except where noted on the drawings or approved by the Architect/Engineer. Contractor shall verify with Architect/Engineer all surface conduit installations except in mechanical rooms.

M. Changes in direction shall be made with symmetrical bends, cast steel boxes, stamped metal boxes or cast steel conduit bodies.

N. For indoor conduits, no continuous conduit run shall exceed 100 feet without a junction box.

O. All conduits installed in exposed areas shall be installed with a box offset before entering box.

3.2 CONDUIT INSTALLATION

A. Cut conduit square; de-burr cut ends.

B. Conduit shall not be fastened to the corrugated metal roof deck.

C. Bring conduit to the shoulder of fittings and couplings and fasten securely.

D. Use conduit hubs for fastening conduit to cast boxes. Use sealing locknuts or conduit hubs for fastening conduit to sheet metal boxes in damp or wet locations.

E. All conduit terminations (except for terminations into conduit bodies) shall use conduit hubs, or connectors with one locknut, or shall use double locknuts (one each side of box wall) and insulated bushing. Provide bushings for the ends of all conduit not terminated in box walls. Refer to Section 260526 – Grounding and Bonding for Electrical Systems for grounding bushing requirements.

F. Install no more than the equivalent of three 90 degree bends between boxes.

G. Use hydraulic one-shot conduit bender or factory elbows for bends in conduit larger than 2 inch (50 mm) size unless sweep elbows are required.

H. Conduit shall be bent according to manufacturer's recommendations. Torches or open flame shall not be used to aid in bend of PVC conduit.

I. Use suitable conduit caps or other approved seals to protect installed conduit against entrance of dirt and moisture.

J. Provide 1/8 inch (3 mm) nylon pull string in empty conduit, except sleeves and nipples.

K. Install expansion-deflection joints where conduit crosses building expansion joints. Note: expansion-deflection joints are not required where conduit crosses building control joints if the control joint does not act as an expansion joint. Install expansion fitting in PVC conduit runs as recommended by the manufacturer.

L. Avoid moisture traps where possible. Where moisture traps are unavoidable, provide junction boxes with drain fittings at conduit low points.

M. Where conduit passes between areas of differing temperatures such as into or out of cool rooms, freezers, unheated and heated spaces, buildings, etc., provide Listed conduit seals to prevent the passage of moisture and water vapor through the conduit.

N. Route conduit through roof openings for piping and ductwork where possible.

O. Conduit is not permitted in any slab topping of two inches or less.

P. Ground and bond conduit under provisions of Section 260526.

Q. Maximum Size Conduit in Slabs Above Grade: 3/4 inch. Do not route conduits to cross each other in slabs above grade.

R. PVC conduit shall transition to galvanized rigid metal conduit before it enters a concrete pole base, foundation, wall (where exposed) or up through a concrete floor.

S. Identify conduit under provisions of Section 260553.

T. All conduit installed underground (exterior to building) shall be buried a minimum of 24 inches below finished grade, whether or not the conduit is concrete encased.

U. PVC conduit shall be cleaned with solvent, and dried before application of glue. The temperature rating of glue/cement shall match weather condition. Apply full even coat of cement/glue to entire area that will be inserted into fitting. The entire installation shall meet manufacturers recommendations.

3.3 CONDUIT INSTALLATION SCHEDULE

A. Conduit other than that specified below for specific applications shall not be used.

B. Underground Installations within Five Feet of Foundation Wall: Rigid steel conduit.

C. Underground Installations More than Five Feet from Foundation Wall: Rigid steel conduit. Plastic-coated rigid steel conduit. Schedule 40 PVC conduit.

D. Under Slab on Grade Installations: Schedule 40 PVC conduit.

E. Exposed Outdoor Locations: Rigid steel conduit.

F. Concealed in Concrete and Block Walls: Rigid steel conduit. Electrical metallic tubing. Schedule 40 PVC conduit.

G. Within Concrete Slab: Rigid steel conduit. Schedule 40 PVC conduit.

H. Wet Interior Locations: Rigid steel conduit, PVC coated rigid steel conduit.

I. Concealed Dry Interior Locations: Rigid steel conduit. Intermediate metal conduit. Electrical metallic tubing.

J. Exposed Dry Interior Locations: Rigid steel conduit. Intermediate metal conduit. Electrical metallic tubing.

K. Motor and equipment connections: Flexible PVC coated metal conduit (all locations). Minimum length shall be one foot; maximum length shall be three feet. Conduit must be installed perpendicular to direction of equipment vibration to allow conduit to freely flex.

L. Light fixtures: Direct box or conduit connection for surface mounted and recessed fixtures. Flexible metal conduit from a J-box for recessed lay-in light fixtures. Conduit size shall be 3/8 inch minimum diameter and six foot maximum length. Conduit length shall allow movement of fixture for maintenance purposes.

M. Medium Voltage Applications (Interior Locations): Rigid steel conduit.

3.4 COORDINATION OF BOX LOCATIONS

A. Provide electrical boxes as shown on Drawings, and as required for splices, taps, wire pulling, equipment connections, and code compliance.

B. Electrical box locations shown on Contract Drawings are approximate unless dimensioned. Verify location of floor boxes and outlets in offices and work areas prior to rough-in.

C. No outlet, junction, or pull boxes shall be located where it will be obstructed by other equipment, piping, lockers, benches, counters, etc.

D. Boxes shall not be fastened to the metal roof deck.

E. It shall be the Contractor's responsibility to study drawings pertaining to other trades, to discuss location of outlets with workmen installing other piping and equipment and to fit all electrical outlets to job conditions.

F. In case of any question or argument over the location of an outlet, the Contractor shall refer the matter to the Architect/Engineer and install outlet as instructed by the Architect/Engineer.

G. The proper location of each outlet is considered a part of this contract and no additional compensation will be paid to the Contractor for moving outlets which were improperly located.

H. Locate and install boxes to allow access to them. Where installation is inaccessible, coordinate locations and provide 18 inch by 24 inch access doors.

I. Locate and install to maintain headroom and to present a neat appearance.

J. Install boxes to preserve fire resistance rating of partitions and other elements, using approved materials and methods.

3.5 OUTLET BOX INSTALLATION

A. Do not install boxes back-to-back in walls. Provide minimum 6 inch separation, except provide minimum 24 inch separation in acoustic-rated walls.

B. Power:
   1. Recessed (1/4” maximum) outlet boxes in masonry, concrete or tile construction shall be minimum 4 inch square, with device rings. Device covers shall be square-cut except rounded corner plaster rings are allowed in drywall applications. Angle cut plaster rings are not permitted. Coordinate masonry cutting to achieve neat openings for boxes.

C. Low Voltage:
   1. Recessed (1/4” maximum) outlet boxes in masonry, concrete or tile construction shall be minimum 4-11/16 inch square, 2-1/8 inch deep. Device covers shall be square-cut except rounded corner plaster rings are allowed in drywall applications. Angle cut plaster rings are not permitted. Coordinate masonry cutting to achieve neat openings for boxes.

D. Provide knockout closures for unused openings.

E. Support boxes independently of conduit except for cast boxes that are connected to two rigid metal conduits, both supported within 12 inches of box.

F. Use multiple-gang boxes where more than one device are mounted together; do not use sectional boxes. Provide non-metallic barriers to separate wiring of different voltage systems.

G. Install boxes in walls without damaging wall insulation.

H. Coordinate mounting heights and locations of outlets mounted above counters, benches, and backsplashes. Devices mounted above a countertop shall be oriented horizontally.

I. Ceiling outlets shall be 4 inch square, minimum 2-1/8 inch deep except that concrete boxes and plates will be approved where applicable. Position outlets to locate luminaires as shown on reflected ceiling plans.

J. In inaccessible ceiling areas, position outlets and junction boxes within 6 inches of recessed luminaire, to be accessible through luminaire ceiling opening.

K. Provide recessed outlet boxes in finished areas; secure boxes to interior wall and partition studs, accurately positioning to allow for surface finish thickness. Use stamped steel stud bridges for flush outlets in hollow stud wall, and adjustable steel channel fasteners for flush ceiling outlet boxes.

L. Align wall-mounted outlet boxes for switches, thermostats, and similar devices.

M. Provide cast ferroalloy or aluminum outlet boxes in exterior and wet locations.

N. Surface wall outlets shall be 4 inch square with raised covers for one and two gang requirements. For three gang or larger requirements, use gang boxes with non-overlapping covers.

3.6 FLOOR BOX INSTALLATION

A. Set boxes level and flush with finish flooring material.

3.7 PULL AND JUNCTION BOX INSTALLATION

A. Locate pull boxes and junction boxes above accessible ceilings, in unfinished areas or furnish and install Owner approved access panels in non-accessible ceilings where boxes are installed. All boxes are to be readily-accessible.

B. Support pull and junction boxes independent of conduit.

END OF SECTION

INTENTIONALLY LEFT BLANK

SECTION 260553

IDENTIFICATION FOR ELECTRICAL SYSTEMS

PART 1 GENERAL

1.1 SCOPE

A . The work under this section includes the products and execution requirements relating to labeling of power, lighting, general wiring, signal, fire alarm, and telecommunications wire and cabling. Further, this section includes labeling of all terminations and related sub-systems, including but not limited to nameplates, stenciling, wire and cable marker labeling of all backbone fiber optic (inter-building, tie & riser) cables, terminating equipment and labeling of inner duct (fiber optic). Included are the following topics:

1. PART 1 - GENERAL.
    a. Scope.
    b. Related Work.
    c. Submittals.
2. PART 2 - PRODUCTS.
    a. Materials.
3. PART 3 - EXECUTION.
    a. General.
    b. Junction and Pullbox Identification.
    c. Power and Control Wire Identification.
    d. Wiring Device Identification.
    e. Nameplate Engraving.
    f. Panelboard Directories.

1.2 RELATED WORK

A . Applicable provisions of Bidding Requirements and Division 1 - General Requirements govern work under this section.

B . Section 260519 - Low-Voltage Electrical Power Conductors and Cables.

C . Section 260523 - Control-Voltage Electrical Power Cables.

D . Division 27, for Communications Cable and Equipment.

1.3 SUBMITTALS

A . Refer to applicable sections in Bidding Requirements and Division 1 - General Requirements.

B . Include schedule for nameplates and stenciling.

C . Prior to installation, the Contractor shall provide samples of all label types planned for the project. These samples shall include examples of the lettering to be used. Samples shall be mounted on 8-1/2” x 11” sheets annotated, explaining their purposed use.

PART 2 PRODUCTS

2.1 MATERIALS

A . Labels: All labels shall be permanent, and machine generated. NO HANDWRITTEN OR NON-PERMANENT LABELS ARE ALLOWED. Exception: Back side of device plates and junction boxes may use handwritten, legible labeling on box covers, unless specifically prohibited by other specification sections.

B . Cable label size shall be appropriate for the conductor or cable size(s), outlet faceplate layout and patch panel design. All labels shall be self-laminating, white/transparent vinyl and be wrapped around the cable or sheath. Labels for power conductors (600V and lower) shall be cloth-type. Flag type labels are not allowed. The labels shall be of adequate size to accommodate the circumference of the cable being labeled and properly self-laminate over the full extent of the printed area of the label.

C . Nameplates: Engraved three layer laminated plastic, black letters on a white background. Emergency system (level 1 and level 2) shall use white letters on red background.

D . Tape (phase identification only): Scotch #35 tape in appropriate colors for system voltage and phase.

E . Adhesive type labels not permitted except for phase and wire identification. Machine generated adhesive labels shall be permitted for device plates, 4-11/16 inch and smaller junction boxes, fire alarm and control devices.

PART 3 EXECUTION

3.1 GENERAL

A . Where mixed voltages are used in one building (e.g. 4160 volt, 480 volt, 208 volt) each switch, switchboard, junction box, equipment, etc., on each system must be labeled for voltage in addition to other requirements listed herein.

B . All branch circuit and power panels must be identified with the same symbol used in circuit directory in main distribution center.

C . Clean all surfaces before attaching labels with the label manufacturer's recommended cleaning agent.

D . Install all labels firmly as recommended by the label manufacturer.

E . Labels shall be installed plumb and neatly on all equipment.

F . Install nameplates parallel to equipment lines.

G . Secure nameplates to equipment fronts using screws, rivets or manufacturer approved adhesive or cement.

H . Embossed tape will not be permitted for any application.

3.2 JUNCTION AND PULLBOX IDENTIFICATION

A . The following junction and pullboxes shall be identified utilizing spray painted covers:

System	Color(s)
Secondary Power – 480Y/277V	Brown
Secondary Power – 208Y/120V, 240/120V	White
Emergency Power – 480Y/277V	Brown/Red
Emergency Power – 208Y/120V	White/Red
Fire Alarm	Red
Temperature Control	Green
Door Control and Door Monitoring System	Orange
Sound and Intercom Systems	Blue
Video Surveillance System/MATV	Yellow

B . Provide circuit numbers, and source panel designations for power wiring. Other system shall be identified as shown on details or approved shop drawings. Temperature control shall identify the source.

3.3 POWER AND CONTROL WIRE IDENTIFICATION

A . Provide wire markers on each conductor in panelboard gutters, pull boxes, outlet and junction boxes, and at load connection. Identify with branch circuit or feeder number for power and lighting circuits, and with control wire number as indicated on schematic and interconnection diagrams or equipment manufacturer's shop drawings for control wiring.

B . All wiring shall be labeled within 2 to 4 inches of terminations. Each end of a wire or cable shall be labeled as soon as it is terminated including wiring used for temporary purposes.

3.4 WIRING DEVICE IDENTIFICATION

A . Wall switches, receptacles, occupancy sensors, wall dimmers, device plates and box covers, poke-through fittings, access floor boxes, photocells and time clocks shall be identified with circuit numbers and source. In exposed areas, identifications should be made inside of device covers, unless directed otherwise. Use machine-generated labels, or neatly hand-written permanent marker.

3.5 NAMEPLATE ENGRAVING

A . Provide nameplates of minimum letter height as scheduled below.

B . Panelboards, Switchboards and Motor Control Centers: 1 inch; identify equipment designation. 1/2 inch (13 mm); identify voltage rating, source and room location of the source.

C . Equipment Enclosures: 1 inch; identify equipment designation.

D . Circuit Breakers, Switches, and Motor Starters in Panelboards or Switchboards or Motor Control Centers: 1/2 inch; identify circuit and load served, including location.

E . Individual Circuit Breakers, Disconnect Switches, Enclosed Switches, and Motor Starters: 1/2 inch; identify source and load served.

F . Transformers: 1 inch; identify equipment designation. 1/2 inch; identify primary and secondary voltages, primary source, and secondary load and location.

G . Junction boxes: 1 inch; identify system source(s) and load(s) served. Junction boxes may be neatly identified using a permanent marker.

3.6 PANELBOARD DIRECTORIES

A . Typed directories for panels must be covered with clear plastic, have a metal frame. Room number on directories shall be Owner's numbers, not Plan numbers unless Owner so specifies.

END OF SECTION

INTENTIONALLY LEFT BLANK

SECTION 260573

SHORT CIRCUIT/COORDINATION STUDY
AND
ARC FLASH HAZARD STUDY

PART 1 GENERAL

1.1 SCOPE

A. The Electrical Contractor shall retain the services of an independent third party firm to perform a short circuit/coordination study and arc flash hazard study as described herein.

B. The studies shall be submitted to the Design Engineer prior to receiving final approval of the distribution equipment shop drawings and/or prior to release of equipment for manufacture. If formal completion of the studies may cause delay in equipment manufacture, approval from the Engineer may be obtained for a preliminary submittal of sufficient study data to ensure that the selection of device ratings and characteristics will be satisfactory.

C. The studies shall include all portions of the electrical distribution system from the normal power source or sources, and emergency / standby sources, down to and including the smallest circuit breaker in the distribution system (for short circuit calculations). Normal system connections and those which result in maximum fault conditions shall be adequately covered in the study.

D. The firm should be currently involved in high and low-voltage power system evaluation. The study shall be performed, stamped and signed by a registered professional engineer in the State of Oklahoma. Credentials of the individual(s) performing the study and background of the firm shall be submitted to the Design Engineer for approval prior to start of the work. A minimum of five 5 years of experience in power system analysis is required for the individual in charge of the project.

E. The firm performing the study should demonstrate capability and experience to provide assistance during start up as required.

F. The study and assessment shall be performed based on SKM's Dapper, Captor and PowerTool software.

G. Included are the following topics:
   1. PART 1 - GENERAL.
      a. Scope.
      b. Related Work.
      c. Quality Assurance.
      d. Data Collection for the Study.
      e. Submittals.
   2. PART 2 - PRODUCTS.
      a. Not Used.
   3. PART 3 - EXECUTION.
      a. Short Circuit and Coordination Study.
      b. Field Settings.
      c. Arc Flash Hazard Study.

1.2 RELATED WORK

A. Applicable provisions of Bidding Requirements and Division 1 - General Requirements govern work under this section.

B. Section 26 24 16 - Panelboards.

1.3 QUALITY ASSURANCE

A. Reference standards listed in the *IEEE Recommended Practices for Protection and Coordination of Industrial and Commercial Power Systems* ("Buff Book"), latest edition.

1.4 DATA COLLECTION FOR THE STUDY

A. The Contractor shall provide the required data for preparation of the studies. The engineer performing the system studies shall furnish the Contractor with a listing of the required data immediately after award of the contract.

B. The Contractor shall expedite collection of the data to assure completion of the studies as required for final approval of the distribution equipment shop drawings and/or prior to release of the equipment for manufacture.

1.5 SUBMITTALS

A. Refer to applicable sections in Bidding Requirements and Division 1 - General Requirements.

B. Third Party Qualifications:
   1. Submit qualifications of individual(s) who will perform the work to Design Engineer for approval prior to commencement of the studies.

C. Draft Report:
   1. Submit a draft of the study to Design Engineer for review prior to delivery of the study to the Owner. Make all additions or changes as required by the reviewer.

D. Final Study Report:
   1. Provide studies in conjunction with equipment submittals to verify equipment ratings required.
   2. The results of the power system study shall be summarized in a final report. Six (6) bound copies of the final report shall be submitted. Provide two (2) copies in PDF format of the study, so that it can be more easily stored and shared. Also, provide 2 copies (on CD) of the report in MS word, and 2 copies (on CD) of the one-line diagram in CAD format.
   3. The report shall include the following sections:
      a. Overview.
      b. Short Circuit Study:
         SC-1 Purpose.
         SC-2 Explanation of Data.
         SC-3 Assumptions.
         SC-4 Analysis of Results.
         SC-5 Recommendations.
         SC-6 DAPPER Fault Analysis Input Report.
      c. Protective Device Coordination Study:
         PDC-1 Purpose.
         PDC-2 Explanation of Data.
         PDC-3 Assumptions.
         PDC-4 Analysis of Results.
         PDC-5 Recommendations (Including NEC 700-27 Requirement).
         PDC-6 CAPTOR Results.
         PDC-7 Example Drawings.
      d. Arc Flash Study:
         ARC-1 Purpose.
         ARC-2 Explanation of Data.
         ARC-3 Assumptions.
         ARC-4 Analysis of Results.
         ARC-5 Recommendations.
         ARC-6 SKM Arc Flash Evaluation Report.
      e. Prioritized Recommendations and Conclusions.
      f. Appendices:
         APP-1 DAPPER One-line Diagrams.
         APP-2 AutoCAD One-line Diagrams.
         APP-3 SKM Protective Device Summaries.
         APP-4 Reference Data.

APP-5 Sample Work Permit Form.
APP-6 Copy of Warning Labels, including study date.

E. The above sections shall include the following items in detail:
   1. Obtain available fault current from the local utility company.
   2. Short circuit studies shall evaluate the available fault current at each bus (each change of impedance), including all three-phase motors.
   3. Coordination study recommendations for relay settings, breaker settings, and motor protection settings.
   4. Recommendations for improving the coordination and/or load distribution, as well as ground fault requirements.
   5. Arc flash values for two normal cases to define the highest values (low short circuit and high short circuit).
   6. Arc flash values for two maintenance cases, which define the arc flash values available at the equipment that would be available if the instantaneous trip of the upstream circuit breaker is set at a minimum value. This is recommended if someone has to work on live equipment.
   7. IEEE standard one-line diagram with equipment evaluation and circuit breaker setting forms that clearly define the system data and are easy to interpret.
   8. Recommendations to reduce the arc flash incident energy in all areas that require class 2 and higher PPE.
   9. Prioritized report summarizing all recommendations from this study. This shall include observed NEC code violations and their corrective action.
   10. The Contractor shall provide a one-line diagram that meets IEEE/ANSI standard 141, mounted on 24” x 36” (minimum) Styrofoam backboard. This one-line diagram shall be mounted in each electrical room.

PART 2 PRODUCTS – NOT USED

PART 3 EXECUTION

3.1 SHORT CIRCUIT AND COORDINATION STUDY

A. The short circuit, coordination, and arc flash hazard studies shall be performed using SKM Dapper, Captor and PowerTool for Windows software packages. In the short circuit study, provide calculation methods and assumptions, the base per unit quantities selected, one-line diagrams, source impedance data including power company system characteristics, typical calculations, and recommendations. Calculate short circuit interrupting and momentary (when applicable) duties for an assumed 3-phase bolted fault at each supply switchgear lineup, unit substation primary and secondary terminals, low voltage switchgear lineup, switchboard, motor control center, distribution panelboard, pertinent branch circuit panelboard, and other significant locations throughout the system. Provide a ground fault current study for the same system areas, including the associated zero sequence impedance data. Include in tabulations fault impedance, X to R ratios, asymmetry factors, motor contribution, short circuit KVA, and symmetrical and asymmetrical fault currents.

B. In the protective device coordination study, provide time-current curves graphically indicating the coordination proposed for the system, centered on conventional, full-size, log-log forms. Include with each curve sheet a complete title and one-line diagram with legend identifying the specific portion of the system covered by that particular curve sheet. Include a detailed description of each protective device identifying its type, function, manufacturer, and time-current characteristics. Tabulate recommended device tap, time dial, pickup, instantaneous, and time delay settings.

C. Include on the curve sheets power company relay and fuse characteristics, system medium-voltage equipment relay and fuse characteristics, low-voltage equipment circuit breaker trip device characteristics, pertinent transformer characteristics, pertinent transformer characteristics, pertinent motor and generator characteristics, and characteristics of other system load protective devices. Include at least all devices down to largest branch circuit and largest feeder circuit breaker in each motor control center, and main breaker in branch panelboards.

D. Include all adjustable settings for ground fault protective devices. Include manufacturing tolerance and damage bands in plotted fuse characteristics. Show transformer full load and 150, 400, or 600 percent currents, transformer magnetizing inrush, ANSI transformer withstand parameters, and significant symmetrical and asymmetrical fault currents. Terminate device characteristic curves at a point reflecting the maximum symmetrical or asymmetrical fault current to which the device is exposed.

E. Select each primary protective device required for a delta-wye connected transformer so that its characteristic or operating band is within the transformer characteristics, including a point equal to 58 percent of the ANSI withstand point to provide secondary line-to-ground fault protection. Where the primary device characteristic is not within the transformer characteristics, show a transformer damage curve. Separate transformer primary protective device characteristic curves from associated secondary device characteristics by a 16 percent current margin to provide proper coordination and protection in the event of secondary line-to-line faults. Separate medium-voltage relay characteristic curves from curves for other devices by at least a 0.4-second time margin.

F. Include complete fault calculations as specified herein for each proposed and ultimate source combination. Note that source combinations may include present and future supply circuits, large motors, or generators as noted on drawing one-lines.

G. Utilize equipment load data for the study obtained by the Contractor from contract documents, including contract addendums issued prior to bid openings.

H. Include fault contribution of all motors in the study. Notify the Engineer in writing of circuit protective devices not property rated for fault conditions.

I. Provide settings for the chiller motor starters or obtain from the mechanical contractor, include in the study package, and comment.

J. When an emergency generator is provided, include phase and ground coordination of the generator protective devices, to meet NEC 700.27 requirements. Show the generator decrement curve and damage curve along with the operating characteristic of the protective devices. Obtain the information from the generator manufacturer and include the generator actual impedance value, time constants and current boost data in the study. Do not use typical values for the generator.

K. Evaluate proper operation of the ground relays in 4-wire distributions with more than one main service circuit breaker, or when generators are provided, and discuss the neutral grounds and ground fault current flows during a neutral to ground fault.

L. For motor control circuits, show the MCC full-load current plus symmetrical and asymmetrical of the largest motor starting current to ensure protective devices will not trip major or group operation.

3.2 FIELD SETTINGS

A. The Contractor shall perform field adjustments of the protective devices as required to place the equipment in final operating condition. The settings shall be in accordance with the approved short circuit study, protective device coordination study and arc flash hazard study.

B. Necessary field settings of devices and adjustments and minor modifications to equipment to accomplish conformance with the approved short circuit and protective device coordination study shall be carried out by the Contractor at no additional cost to the Owner.

3.3 ARC FLASH HAZARD STUDY

A. As part of the short circuit and coordination study, arc flash hazard study shall be included. The study shall include the following:
   1. Determine and document all possible utility and generator/emergency sources that are capable of being connected to each piece of electrical gear. Calculations shall be based on highest possible source connection.
   2. Calculations to conform to National Fire Protection Association (NFPA) 70E – 2003 calculation standards. All incident energy units shall be calculated in calories per square centimeter.
   3. Provide recommended boundary zones and personal protective equipment (PPE) based on the calculated incident energy and requirements of NFPA 70E-2003 for each piece of electrical gear.

B. Electrical Contractor shall provide labeling as required by OSHA based upon the results of the arc flash hazard study. At a minimum, the labeling shall contain the following information: PPE level, Flash Hazard Boundaries, Flash Protection Boundary, and Shock Hazard Boundaries such as Limited Approach Boundary, Restricted Approach Boundary, Prohibited Approach Boundary, and study date.

END OF SECTION

INTENTIONALLY LEFT BLANK

SECTION 262200

LOW-VOLTAGE TRANSFORMERS

PART 1 GENERAL

1.1 SCOPE

A. The work under this section includes dry type general purpose two winding transformers meeting the requirements of NEMA TP-1, and dry type isolation transformers. Included are the following topics:
   1. PART 1 – GENERAL.
      a. Scope.
      b. Related Work.
      c. References.
      d. Submittals.
      e. Operation and Maintenance Data.
      f. Delivery, Storage, and Handling.
   2. PART 2 – PRODUCTS.
      a. Dry Type General Purpose Two Winding Transformers.
   3. PART 3 – EXECUTION.
      a. Installation.
      b. Field Quality Control.

1.2 RELATED WORK

A. Applicable provisions of Bidding Requirements and Division 1 - General Requirements govern work under this section.

1.3 REFERENCES

A. NEMA TP-1.

1.4 SUBMITTALS

A. Refer to applicable sections in Bidding Requirements and Division 1 - General Requirements.

B. Include outline and support point dimensions of enclosures and accessories, unit weight, voltage, kVA, and impedance ratings and characteristics, loss data, efficiency at 25, 50, 75 and 100 percent rated load, sound level, tap configurations, insulation system type, and rated temperature rise.

1.5 OPERATION AND MAINTENANCE DATA

A. All operations and maintenance data shall comply with the submission and content requirements specified under applicable sections in Bidding Requirements and Division 1 - General Requirements.

1.6 DELIVERY, STORAGE, AND HANDLING

A. Store and protect equipment in a dry location with uniform temperature. Cover ventilating openings to keep out dust.

B. Handle transformers using only lifting eyes and brackets provided for that purpose. Protect units against entrance of rain, sleet, or snow if handled in inclement weather.

PART 2 PRODUCTS

2.1 MANUFACTURERS

A. Square D: www.squared.com.

B. Siemens: www.siemens.com.

C. General Electric: www.geindustrial.com.

D. Cutler Hammer: www.cutlerhammer.com.

2.2 DRY TYPE GENERAL PURPOSE TWO WINDING TRANSFORMERS

A. Dry Type General Purpose Transformers: Factory assembled, air cooled, dry type general purpose two winding transformers per NEMA-TP1; ratings as shown on the Drawings.

B. Transformers shall meet the energy efficiency standards of NEMA TP-1 and the DOE 'ENERGY STAR' label.

C. Transformer losses shall conform to NEMA TP-1 requirements.

D. Insulation system shall be rated at 220 degrees C.

E. Winding temperature rise shall be rated at 150 degrees C above a 40 degrees C ambient.

F. Case temperature shall not exceed 50 degrees C rise above a 40 degrees C ambient at its warmest point.

G. Winding Taps, Transformers 15 KVA and Larger: Four 2-1/2 percent taps, two above and two below rated voltage, full capacity taps on primary winding.

H. Sound Levels: Maximum sound levels are as follows:

KVA Rating	Sound Level
15-50	45 dB
51-150	50 dB
151-300	55 dB
301-500	60 dB
501-750	65 dB

I. Ground core and coil assembly to enclosure by means of a visible flexible copper grounding strap sized to meet NEMA and UL standards.

J. Coil Conductors: Continuous windings with termination pads brazed or welded.

K. Isolate core and coil from enclosure using vibration absorbing mounts.

L. Enclosure: NEMA Type per drawings. Provide lifting eyes or brackets.

M. Nameplate: Include transformer connection data.

N. Mounting: Transformers 75 KVA and less shall be suitable for wall, floor, or trapeze mounting; transformers larger than 75 KVA shall be suitable for floor or trapeze mounting.

PART 3 EXECUTION

3.1 INSTALLATION

A. Set transformer plumb and level.

B. Use flexible conduit, 2 ft. minimum length, for connections to transformer case. Make conduit connections to side panel of enclosure.

C. Mount transformers on vibration isolating pads suitable for isolating the transformer noise from the building structure.

D. Provide sufficient space around transformer for cooling as recommended by the manufacturer.

3.2 FIELD QUALITY CONTROL

A. Check for damage and tight connections prior to energizing transformer.

B. Measure primary and secondary voltages and make appropriate tap adjustments within 2-1/2% of the normal operating load after the building is in full operation.

END OF SECTION

SECTION 262416

PANELBOARDS

PART 1 GENERAL

1.1 SCOPE

A . The work under this section includes main, distribution and branch circuit panelboards. Included are the following topics:
1. PART 1 – GENERAL.
   a. Scope.
   b. Related Work.
   c. Submittals.
   d. Operation and Maintenance Data.
   e. Spare Parts.
2. PART 2 – PRODUCTS.
   a. Main and Distribution Panelboards.
   b. Branch Circuit Panelboards.
3. PART 3 – EXECUTION.
   a. Installation.
   b. Field Quality Control.

1.2 RELATED WORK

A . Applicable provisions of Division 1 govern work under this Section.

1.3 SUBMITTALS

A . Refer to applicable sections in Bidding Requirements and Division 1 - General Requirements for Submittal procedure.

B . Include outline and support point dimensions, voltage, main bus ampacity, integrated short circuit ampere rating, and circuit breaker arrangement and sizes.

1.4 OPERATION AND MAINTENANCE DATA

A . All operations and maintenance data shall comply with the submission and content requirements specified.

1.5 SPARE PARTS

A . Keys: Furnish 2 keys for each panelboard to Owner.

PART 2 PRODUCTS

2.1 MANUFACTURERS

A . Square D: www.squared.com.

B . Siemens: www.siemens.com.

C . General Electric: www.geindustrial.com.

D . Cutler Hammer: www.cutlerhammer.com.

2.2 MAIN AND DISTRIBUTION PANELBOARDS

A . Panelboards: Circuit breaker type.

B . Enclosure: NEMA Type 1.. Minimum cabinet size: 5-3/4 inches deep; 20 inches wide, with 5 inch minimum gutter space top and bottom. Constructed of galvanized code gauge steel.

C . Provide cabinet front with hinged door with flush lock. Front cover shall be hinged to allow access to wiring gutters without removal of panel trim. Hinged trim shall be held in place with screw fasteners. Finish in manufacturer's standard gray enamel.

D . Provide metal directory holders with clear plastic covers.

E . Provide panelboards with copper bus (phase buses, bus fingers, etc., ratings as scheduled on Drawings. Provide ground bars in all panelboards. Neutral and ground bars can be dual rated ALCU9. All spaces shall have bus fully extended and drilled for the future installation of breakers.

F . Minimum System (i.e. individual component) Short Circuit Rating: As shown on the Drawings.

G . Molded Case Circuit Breakers: Provide circuit breakers with integral thermal and instantaneous magnetic trip in each pole. Provide circuit breakers UL listed as Type HACR for air conditioning equipment branch circuits.

H . Circuit breakers shall be bolt-on type with common trip handle for all poles. No handle ties of any sort will be approved.

2.3 BRANCH CIRCUIT PANELBOARDS

A . Lighting and Appliance Branch Circuit Panelboards: Circuit breaker type.

B . Enclosure: Type 1. Minimum cabinet size: 5-3/4 inches deep; 20 inches (508 mm) wide with 5 inch minimum gutter space top and bottom. Constructed of galvanized code gauge steel. Panel enclosure (back box) shall be of non-stamped type (without KO's) to avoid concentric break out problem.

C . Provide surface cabinet front with concealed trim clamps, concealed hinge and flush cylinder lock all keyed alike. Front cover shall be hinged to allow access to wiring gutters without removal of panel trim. Hinged trim shall be held in place with screw fasteners. Finish in manufacturer's standard gray enamel.

D . Provide metal directory holders with clear plastic covers.

E . Provide panelboards with copper bus (phase buses, bus fingers, etc., ratings as scheduled on Drawings. Provide ground bars in all panelboards. Neutral and ground bars can be dual rated ALCU9. All spaces shall have bus fully extended and drilled for the future installation of breakers.

F . Minimum System (i.e. individual component) Short Circuit Rating: As shown on the Drawings.

G . Molded Case Circuit Breakers: Bolt-on type thermal magnetic trip circuit breakers. Provide UL Class A ground fault interrupter circuit breakers where shown on Drawings. Provide circuit breakers UL listed as Type HACR for air conditioning equipment branch circuits.

H . Do not use tandem circuit breakers.

I . Circuit breakers shall be bolt-on type with common trip handle for all poles. No handle ties of any sort will be approved.

All of the panelboards provided under this section shall be by the same manufacturer.

PART 3 EXECUTION

3.1 INSTALLATION

A . See Section 260529 for support requirements.

B . Install panelboards plumb with wall finishes.

C . Height: 6 feet to top.

D . Install a crimp type stud termination to stranded conductor when terminating on circuit breakers without a captive assembly rated for terminating stranded conductors.

E . Provide filler plates for unused spaces in panelboards.

F . See Section 26 05 53 for identification requirements. Provide typed circuit directory for each branch circuit panelboard. Revise directory to reflect circuiting changes required to balance phase loads.

G . Stub three (3) empty 3/4 inch conduits to accessible location above ceiling or below floor out of each recessed panelboard. Cap these conduits to prevent material from entering them.

3.2 FIELD QUALITY CONTROL

A . If aluminum conductors size #1/0 and larger (per Section 26 05 19) are to be used as panelboard feeders, it is the responsibility of the Contractor to provide panelboards with adequate wire bending space to accommodate the aluminum conductors and terminators to meet allowable code requirements. The Contractor shall circuit the panelboards as shown on the drawings. Measure steady state load currents at each panelboard feeder. Should the difference at any panelboard between phases exceed 10 percent, rearrange circuits in the panelboard to balance the phase loads within 10 percent.

B . Visual and Mechanical Inspection: Inspect for physical damage, proper alignment, anchorage, and grounding. Check proper installation and tightness of connections.

END OF SECTION

INTENTIONALLY LEFT BLANK

SECTION 262702

EQUIPMENT WIRING SYSTEMS

PART 1 GENERAL

1.1 SCOPE

A . The work under this section includes electrical connections to equipment specified under other Divisions and/or Sections, or furnished by Owner, including, but not limited to:
   1. HVAC motors, VFDs, and panels.
   2. Plumbing motors, VFDs, and panels.

B . Included are the following topics:
   1. PART 1 – GENERAL.
      a. Scope.
      b. Related Work.
      c. Submittals.
      d. Coordination.
   2. PART 2 – PRODUCTS.
      a. Cords and Caps.
      b. Other Products.
   3. PART 3 – EXECUTION.
      a. Inspection.
      b. Preparation.
      c. Installation.
      d. HVAC and Plumbing Connections.
      e. Equipment Connection Schedule.

1.2 RELATED WORK

A . Applicable provisions of Bidding Requirements and Division 1 - General Requirements govern work under this section.
   1. Section 260519 - Low-Voltage Electrical Power Conductors and Cables.
   2. Section 260533 - Raceway and Boxes for Electrical Systems.

1.3 SUBMITTALS

A . Refer to applicable sections in Bidding Requirements and Division 1 - General Requirements.

B . Product Data: Provide data for cord and wiring devices.

1.4 COORDINATION

A . Coordinate all equipment requirements with the various Contractors and the Owner. Review the complete set of drawings and specifications to determine the extent of wiring, starters, devices, etc., required.

PART 2 PRODUCTS

2.1 CORDS AND CAPS

A . Straight-blade Attachment Plug: NEMA WD 1.

B . Locking-blade Attachment Plug: NEMA WD 5.

C . Attachment Plug Configuration: Match receptacle configuration at outlet provided for equipment.

D . Cord Construction: Oil-resistant thermoset insulated multiconductor flexible cord with identified equipment grounding conductor, suitable for hard usage in damp locations.

E . Cord Size: Suitable for connected load of equipment and rating of branch circuit overcurrent protection.

2.2 OTHER PRODUCTS

A . Refer to related sections for other product requirements.

PART 3 EXECUTION

3.1 INSPECTION

A . Verify that equipment is ready for electrical connection, wiring, and energization.

3.2 PREPARATION

A . Review equipment submittals prior to installation and electrical rough-in. Verify location, size, and type of connections. Coordinate details of equipment connections with supplier and installer.

3.3 INSTALLATION

A . Use wire and cable with insulation suitable for temperatures encountered in heat-producing equipment.

B . Make conduit connections to equipment using flexible PVC-coated metal conduit.

C . Install pre-finished cord set where connection with attachment plug is indicated or specified, or use attachment plug with suitable strain-relief clamps.

D . Provide suitable strain-relief clamps for cord connections to outlet boxes and equipment connection boxes.

E . Make wiring connections in control panel or in wiring compartment of pre-wired equipment in accordance with manufacturer's instructions. Provide interconnecting wiring where indicated.

F . Install disconnect switches, controllers, control stations, and control devices such as limit switches and temperature switches as indicated. Connect with conduit and wiring as indicated.

G . Coolers and Freezers: Cut and seal conduit openings in freezer and cooler walls, floor, and ceilings.

3.4 HVAC AND PLUMBING CONNECTIONS

A . Provide all power wiring including all circuitry carrying electrical energy from panelboard or other source through starters, variable frequency drives (VFDs), and disconnects to motors or to packaged control panels. Packaged control panels may include disconnects and starters and overcurrent protection. Provide all wiring between packaged control panels and motors.

B . VFD Installations: Install VFD input wiring and output wiring in separate conduit systems. Do not mix VFD input power and output power, or control wiring in a common raceway.

C . Provide 120 volts to each temperature control panel. Coordinate requirements with HVAC/DDC Contractors.

D . Unless otherwise specified, all electrical motors and control devices such as aquastats, float and pressure switches, fan powered VAV boxes, switches, electro-pneumatic switches, solenoid valves and damper motors requiring mechanical connections shall be furnished and installed and wired by the Contractor supplying the devices.

E . Each motor terminal box shall be connected with a minimum 12 inch, maximum 36 inch piece of flexible PVC-coated metal conduit to a fixed junction box. Conduit must be installed perpendicular to direction of equipment vibration to allow conduit to freely flex.

F . Check for proper rotation of each motor.

3.5 EQUIPMENT CONNECTION SCHEDULE

A . As indicated on the drawings.

END OF SECTION

INTENTIONALLY LEFT BLANK

SECTION 262726

WIRING DEVICES

PART 1 GENERAL

1.1 SCOPE

A. The work under this section includes wall switches, receptacles, occupancy sensors, wall dimmers, device plates and box covers, poke-through service fittings, access floor boxes, photo cells and time clocks. Included are the following topics:
   1. PART 1 – GENERAL.
      a. Scope.
      b. Related Work.
      c. Submittals.
      d. Operation and Maintenance Data.
   2. PART 2 – PRODUCTS.
      a. Manufacturers.
      b. Wall Switches.
      c. Receptacles.
      d. Occupancy Sensors.
      e. Wall Dimmers.
      f. Device Plates and Box Covers.
   3. PART 3 – EXECUTION.
      a. Installation.
      b. Field Quality Control.
      c. Occupancy Sensors.
      d. Adjusting.

1.2 RELATED WORK

A. Applicable provisions of Bidding Requirements and Division 1 - General Requirements govern work under this section.

1.3 SUBMITTALS

A. Refer to applicable sections in Bidding Requirements and Division 1 - General Requirements.

B. Provide product data showing model numbers, configurations, finishes, dimensions, and manufacturer's instructions.

C. For occupancy sensor shop drawings, the manufacturer’s actual layout of occupancy sensors and the wiring diagrams shall be provided.

1.4 OPERATION AND MAINTENANCE DATA

A. All operations and maintenance data shall comply with the submission and content requirements specified under applicable sections in Bidding Requirements and Division 1 - General Requirements.

PART 2 PRODUCTS

2.1 MANUFACTURERS

A. Cooper: www.cooperwiringdevices.com.

B. Hubbell: www.hubbell-wiring.com.

C. Pass and Seymour: www.passandseymour.com.

D. Leviton: www.leviton.com.

2.2 WALL SWITCHES

A. Wall Switches for Lighting Circuits and Motor Loads Under 1/2 HP: Heavy duty use toggle switch, rated 20 amperes and 120/277 volts AC. Switches shall be UL20 Listed and meet Federal Specification WS-896. All switches shall be heavy duty Specification Grade with separate green ground screw.

B. All switches shall be back and side wired, screw clamp type, suitable for solid or stranded wire up to #10 AWG. Switches shall be Leviton model 1221-S, Hubbell model CS1221, Pass & Seymour model CSB20, Cooper model CSB120, or approved equal.
   1. Handle: Made of nylon or high impact resistant material.
   2. Color: Gray.

2.3 RECEPTACLES

A. Convenience and Straight-blade Receptacles: NEMA Type 5-20R, nylon or high impact resistant face. Receptacles shall be UL498 Listed and meet Federal Specification WC-596. All duplex receptacles shall be heavy duty Specification Grade, 20 amp rated. All receptacles shall be back and side wired, screw clamp type, suitable for solid or stranded wire up to #10 AWG, with a separate green ground screw. Receptacles shall be Leviton model 5362, Hubbell model HBL5362, Pass & Seymour model 5362A, or Cooper model AH5362.

B. Generally, all receptacles shall be duplex convenience type unless otherwise noted.

C. All receptacles installed in outdoor locations, in garages, within 6 feet of the outside edge of sinks, and in other damp or wet locations shall be GFCI type.

D. GFCI Receptacles: Duplex convenience receptacle, Specification Grade, with integral ground fault current interrupter meeting the requirements of UL standard 943 Class A and UL standard 498. GFCI receptacles shall be Leviton model 7899, Hubbell model GF20, Pass & Seymour model 2095, Cooper model VGF20 or approved equal.

E. All devices shall be Gray in color. All receptacles on emergency circuits shall have a red face.

F. All receptacles designated as isolated ground shall have an isolated ground triangle imprint on the face of the receptacle.

G. Locking-Blade Receptacles: As indicated on drawings.

H. Specific-use Receptacle Configuration: As indicated on drawings.

2.4 OCCUPANCY SENSORS

A. All occupancy sensors shall be hardwired type; battery type shall not be permitted.

B. Wall Mounted (Wall Switch Type):
   1. The sensor shall use either passive infrared or, if dual technology, passive infrared and passive acoustic sensing, or passive infrared and ultrasonic, for detecting room occupancy. The unit shall fit in/on a standard single gang switch box.
   2. Rated capacity: 600 watts minimum at 120 volts, 60 Hz; 1000 watts minimum at 277 volts, 60 Hz.
   3. Sensitivity shall be user adjustable or self-adjusting type.
   4. The delay timer shall be adjusted within a range of 6 to 30 minutes by the Contractor in the field. The sensor shall have a test mode for performance testing.
   5. The off switch shall have manual override for positive off and automatic on.
   6. The test LED shall indicate motion.
   7. The area of coverage shall be approximately 180 degrees by 35-40 feet.
   8. The unit shall have a five year warranty.

C. Ceiling Mounted:
   1. The sensor shall use either passive infrared or, if dual technology, passive infrared and passive acoustic sensing, or passive infrared and ultrasonic, for detecting room occupancy. The unit shall fit in/on a standard octagon box. All ceiling mounted sensors shall be installed to a box with ring and box support.
   2. Rated capacity shall be 20 amps at 120 or 277 volts, for fluorescent lamps. Provide power pack as required for low voltage sensors.
   3. Sensitivity shall be user adjustable or self-adjusting type.
   4. The delay timer shall be adjusted within a range of 6 to 30 minutes by the Contractor in the field. The sensor shall have a test mode for performance testing.
   5. The coverage area shall be 360 degrees by approximately 15 feet radius when mounted at 9 foot height. The sensor shall have provisions, such as masking, to block out problem areas.
   6. Test LED to indicate motion.
   7. The unit shall have a five year warranty.
   8. See drawings for actual type of sensor.

2.5 WALL DIMMERS

A. Wall Dimmers: Linear slide semiconductor type.

B. Rating: 600 Watts minimum, larger size to accommodate load shown on Contract Drawings.

2.6 DEVICE PLATES AND BOX COVERS

A. Decorative Cover Plate: 302/304 smooth stainless steel.

B. Weatherproof Cover Plate: Gasketed metal with hinged device covers.

C. Surface Cover Plate: Raised galvanized steel.

PART 3 EXECUTION

3.1 INSTALLATION

A. Install wall switches 46 inches above floor to the center of device, OFF position down.

B. Install wall dimmers 46 inches above floor to the center of device; de-rate ganged dimmers as instructed by manufacturer; do not use common neutral.

C. Install convenience receptacles 24 inches above floor, 2” above backsplash, grounding pole on bottom.

D. Install box for information outlet 24 inches above finished floor. Install box for telephone jack for wall telephone 48 above finished floor.

E. Install specific-use receptacles at heights shown on Contract Drawings.

F. Drill opening for poke-through fitting installation in accordance with manufacturer's instructions.

G. Install decorative plates on switch, receptacle, and blank outlets in finished areas.

H. Install galvanized steel plates on outlet boxes and junction boxes in unfinished areas, above accessible ceilings, and on surface-mounted outlets.

I. Install devices and wall plates flush and level.

J. Receptacles shall have a bonding conductor from grounding terminal to the metal conduit system. Self-grounding receptacles using mounting screws as bonding means are not approved.

3.2 FIELD QUALITY CONTROL

A. Inspect each wiring device for defects.

B. Operate each wall switch and sensor with circuit energized and verify proper operation.

C. Verify that each receptacle device is energized.

D. Test each receptacle device for proper polarity.

E. Test each GFCI receptacle device for proper operation.

F. Owner personnel reserve the right to be present at all tests.

3.3 OCCUPANCY SENSORS

A. Power packs used in return air plenum ceiling areas shall be installed in an approved enclosure or UL listed for return air plenum.

B. Provide a minimum of 4 feet of coiled cable for ceiling-mounted sensors.

C. Sensitivity Test: After the sensor has been energized for at least 15 minutes, walk to the middle of the room (if conference room) or sit at the normal desk position (if and office). Make no motion for 20 seconds. Move one arm up and down slowly. The test LED should blink.

D. Time Delay Test: Set the time delay for 10 minutes. Walk into the room to activate the sensor then leave room. Sensor must turn lights off at approximately 10 minutes. Walk into the room again to reactivate the lights. Lights should activate within 1 second.

E. For lights on emergency power without a remote transfer device, route the emergency circuit through a separate relay controlled by the occupancy sensor(s) in the respective area. For lights on emergency power with a remote transfer device, the emergency power does not get routed through the occupancy sensor relay, but the normal power does get routed through the occupancy sensor relay.

3.4 ADJUSTING

A. Adjust devices and wall plates to be flush and level.

B. Mark all conductors with the panel and circuit number serving the device with a machine generated label, at the device, and on the back of the device cover.

END OF SECTION

SECTION 262728

DISCONNECT SWITCHES

PART 1 GENERAL

1.1 SCOPE

A . The work under this section includes disconnect switches, fuses and enclosures. Included are the following topics:
   1. PART 1 – GENERAL.
      a. Scope.
      b. Related Work.
      c. Submittals.
      d. Operation and Maintenance Data.
   2. PART 2 – PRODUCTS.
      a. Manufacturers.
      b. Disconnect Switches.
      c. Fuses.
   3. PART 3 – EXECUTION.
      a. Installation.

1.2 RELATED WORK

A . Applicable provisions of Bidding Requirements and Division 1 - General Requirements govern work under this section.

1.3 SUBMITTALS

A . Refer to applicable sections in Bidding Requirements and Division 1 - General Requirements.

B . Include outline drawings with dimensions, and equipment ratings for voltage, ampacity, horsepower, and short circuit.

1.4 OPERATION AND MAINTENANCE DATA

A . All operations and maintenance data shall comply with the submission and content requirements specified under applicable sections in Bidding Requirements and Division 1 - General Requirements.

PART 2 PRODUCTS

2.1 MANUFACTURERS

A . Square D: www.squared.com.

B . Siemens: www.siemens.com.

C . General Electric: www.geindustrial.com.

D . Cutler Hammer: www.cutlerhammer.com.

2.2 DISCONNECT SWITCHES

A . Fusible Switch Assemblies (use only when overcurrent protection is required): NEMA Type Heavy Duty; quick-make, quick-break, load interrupter, enclosed knife switch with externally operable handle interlocked to prevent opening front cover with switch in ON position. Handle lockable in OFF position. Fuse Clips: Designed to accommodate Class R cartridge type fuses.

B . Nonfusible Switch Assemblies: NEMA Type Heavy Duty; quick-make, quick-break, load interrupter, enclosed knife switch with externally operable handle interlocked to prevent opening front cover with switch in ON position. Handle lockable in OFF position.

C . Enclosure: NEMA Type 1 for interior installations and Type 3R for exterior installations.

D . Provide manufacturer’s equipment ground kit in all disconnect switches.

2.3 FUSES

A . Fuses 600 Amperes and Less: Dual element, time delay, 600 volt, UL Class RK 5. Interrupting Rating: 200,000 rms amperes.

B . Fuses 601 Amperes and Larger: Time delay, 600 volt, UL Class L. Interrupting Rating: 200,000 rms amperes.

C . **Provide three (3) spares of each size and type fuse. Provide enclosure for spare fuse.**

PART 3 EXECUTION

3.1 INSTALLATION

A . Install disconnect switches where indicated on Drawings.

B . Provide identification as specified in Section 260553.

END OF SECTION

SECTION 265113

INTERIOR LIGHTING FIXTURES, LAMPS, AND BALLASTS

PART 1 GENERAL

1.1 SCOPE

A. The work under this section includes interior luminaires and accessories, exit signs, lamps, and ballasts. Included are the following topics:
   1. PART 1 – GENERAL.
      a. Scope.
      b. Related Work.
      c. Submittals.
      d. Operation and Maintenance Data.
      e. Extra Material.
   2. PART 2 – PRODUCTS.
      a. Manufacturers.
      b. Interior Luminaires and Accessories.
      c. LED Luminaires.
   3. PART 3 – EXECUTION.
      a. Installation.
      b. Adjusting and Cleaning.
      c. Interface with Other Products.
      d. Field Quality Control.
      e. All Fixture Connections Including Master-Satellite.

1.2 RELATED WORK

A. Applicable provisions of Bidding Requirements and Division 1 - General Requirements govern work under this section.

1.3 SUBMITTALS

A. Refer to applicable sections in Bidding Requirements and Division 1 - General Requirements.

B. Include outline drawings, lamp and ballast data, support points, weights, accessory information and performance data for each luminaire type.

C. For each luminaire type, submit luminaire information in the following example table format, and submit catalog cuts with highlighted catalog numbers and required accessories.

LUMINAIRE		BALLAST	LAMP	ANSI INPUT WATTS
Type	Manufacturer and Catalog No.	Manufacturer, Quantity per Fixture, and Catalog No.	Manufacturer, Quantity per Fixture, and Catalog No.	

1.4 OPERATION AND MAINTENANCE DATA

A. All operations and maintenance data shall comply with the submission and content requirements specified under applicable sections in Bidding Requirements and Division 1 - General Requirements.

1.5 EXTRA MATERIAL

A. Provide ten (10) percent of each lamp type, but not less than one (1) of each type.

PART 2 PRODUCTS

2.1 MANUFACTURERS

A. As specified on Light Fixture Schedule on drawings.

2.2 INTERIOR LUMINAIRES AND ACCESSORIES

A. See the Lighting Fixture Schedule on the drawings, for type of fixtures and catalog numbers. Catalog numbers are shown on the drawings for quality and performance requirements only. Fixtures manufactured by others are equally acceptable provided they meet or exceed the performance of the indicated fixtures, and meet the intent of the design.

B. Where alternate fixtures to those specified are provided, notification of alternates are required prior to bid in accordance with Section 26 05 00. Full photometric drawings and a spreadsheet indicating the differences between the specified fixtures and alternate fixtures shall be provided as part of the pre-bid notification. The spreadsheet shall indicate all aspects of the alternate fixture that differ from the specified fixture, including, but not limited to the following:
   1. Physical Dimensions.
   2. Mounting Type.
   3. Fixture Ratings/Listings.
   4. Housing Materials/Construction.
   5. Lumen Output.
   6. Fixture Voltage.
   7. Fixture Wattage.
   8. Fixture Efficacy.
   9. CCT.
   10. CRI.
   11. Beam Angles/Distribution.
   12. Manufacturer Warranty.
   13. Emergency Power.
   14. Controls Requirements.

C. Provide fluorescent fixtures with quick-connect disconnecting means, similar to Thomas & Betts Sta-Kon.

2.3 LED LUMINAIRES

A. LED Luminaires shall meet all DesignLights Consortium® (DesignLights.org) Product Qualification Criteria. This does not require that the luminaire be listed on the DesignLights Consortium's® Qualified Products List, but they must meet the Product Qualification Criteria. The technical requirements that the luminaire shall meet for each Application Category are:
   1. Minimum Light Output.
   2. Zonal Lumen Requirements.
   3. Minimum Luminaire Efficacy.
   4. Minimum CRI.
   5. L70 Lumen Maintenance.
   6. Minimum Luminaire Warranty of 5 years (not pro-rated) to include LED driver and all LED components.
   7. Additional requirements:
      a. Color Temperature of 3000K-4100K for interior luminaires as listed in the Luminaire Schedule on the plans. The color temperature of exterior LED luminaires should not exceed 4100K (nominal).
      b. Color Consistency: LED manufacturer shall use a maximum 3-step MacAdam Ellipse binning process to achieve consistent luminaire-to-luminaire color for interior luminaires. Exterior luminaires shall use a maximum 5-step MacAdam Ellipse binning process.
      c. Glare Control: Exterior luminaires shall meet DesignLights Consortium's® criteria for Zonal Lumen Distribution requirements or Backlight-Uplight-Glare (BUG) standards for exterior luminaires.

d. Luminaire shall be mercury-free, lead-free, and RoHS compliant.
e. Luminaire shall comply with FCC 47 CFR part 15 non-consumer RFI/EMI standards.
f. Light output of the LED system shall be measured using the absolute photometry method following IES LM-79 and IES LM-80 requirements and guidelines.
g. Luminaire shall maintain 70% lumen output (L70) for a minimum of 50,000 hours.
h. Driver shall have a rated life of 50,000 hours, minimum.
i. Lumen output shall not depreciate more than 20% after 10,000 hours of use.
j. Driver and LEDs shall be furnished from a single manufacturer to ensure compatibility.
k. Luminaire Color Rendering Index (CRI) shall be a minimum of 80 for interior luminaires, and a minimum of 70 for exterior luminaires.
l. LED luminaire shall be thermally designed as to not exceed the maximum junction temperature of the LED for the ambient temperature of the location the luminaire is to be installed. Rated case temperature shall be suitable for operation in the ambient temperatures typically found for the intended installation. Exterior luminaires to operate in ambient temperatures of -20°F to 122°F (-29°C to 50°C).
m. LED driver shall have a minimum power factor (pf) of 0.9 and a maximum crest factor (cf) of 1.5 at full input power and across specified voltage range.
n. Luminaire shall operate normally for input voltage fluctuations of plus or minus 10 percent.
o. Luminaire shall have a maximum Total Harmonic Distortion (THD) of 20% at full input power and across specified voltage range.
p. Wiring connections to LED drivers shall utilize polarized quick-disconnects for field maintenance.
q. All connections to luminaires shall be reverse polarity protected and provide high voltage protection in the event connections are reversed or shorted during the installation process.
r. Fuse Protections: All luminaires shall have built-in fuse protection. All power supply outputs shall be either fuse protected or be Polymeric Positive Temperature Coefficient (PTC)-protected as per Class 2 UL listing.
s. All luminaires shall be provided with knockouts for conduit connections.
t. The LED luminaire shall carry a limited 5-year warranty minimum for LED light engine(s)/board array, and driver(s).
u. Provide all of the following data on submittals:
    1) Delivered lumens.
    2) Input watts.
    3) Efficacy.
    4) Color rendering index.

8. LED Luminaires used for Emergency Egress Lighting:
    a. The failure of one LED shall not affect the operation of the remaining LEDs.
9. Emergency LED Luminaire Compatibility with Inverters:
    a. Emergency Inverters shall be sine-wave type, or have written confirmation from the luminaire manufacturer that the luminaire will function with a square-wave inverter.
10. Dimming:
    a. LED driver shall be compatible with dimming controls where dimming is indicated on the plans. Dimmable drivers shall use Dimming Constant Current (DCC) or Pulse Width Modulation (PWM) operation.
    b. LED luminaires shall dim to (20%, 15%, 10%, 5%, or 0.1%) as specified in the Luminaire Schedule on the plans without visible flicker or “popcorn effect”. “Popcorn effect” is defined as the luminaire being on a pre-set dimmed level (less than 100%), and going to 100% prior to returning to the pre-set level when power is returned to the luminaire.

PART 3 EXECUTION

3.1 INSTALLATION

A. Install in accordance with manufacturer’s instructions.

B. Install suspended luminaires and exit signs using pendants supported from swivel hangers. Heavy duty jack chain supports may be used where indicated on the fixture schedule. Provide pendant or chain length required to suspend luminaire at indicated height.

C. Support luminaires larger than 2 x 4 foot size independent of ceiling framing.

D. Locate ceiling luminaires as indicated on reflected ceiling plan.

E. Install surface mounted luminaires and exit signs plumb and adjust to align with building lines and with each other. Secure to prohibit movement.

F. The Contractor shall install fixture supports as required. Fixture installations with fixtures supported only by insecure boxes will be rejected. It shall be the Contractor's responsibility to support all lighting fixtures adequately, providing extra steel work for the support of fixtures if required. Any components necessary for mounting fixtures shall be provided by the Contractor. No plastic, composition or wood type anchors shall be used.

G. Exposed Grid Ceilings: Provide auxiliary members spanning ceiling Ts to support surface mounted luminaires Fasten surface mounted luminaires to ceiling T using bolts, screws, rivets, or suitable clips. Provide independent support for all fixtures over 50 lbs.

H. Install recessed luminaires to permit removal from below.

I. Install recessed luminaires using accessories and firestopping materials to meet regulatory requirements for fire rating.

J. Install code required hardware to secure recessed grid-supported luminaires in place.

K. Install wall mounted luminaires and exit signs at height as scheduled.

L. Install accessories furnished with each luminaire.

M. Make wiring connections to branch circuit using building wire with insulation suitable for temperature conditions within luminaire.

N. Bond fixtures and metal accessories to branch circuit equipment grounding conductor.

O. Install specified lamps in each luminaire and exit sign.

P. HID Luminaires: Use power hook hangers rated 500 pounds minimum or provide safety chain between ballast and structure. Provide safety chain between reflector and ballast.

Q. All lamps shall be delivered to the job in sealed cartons and protected from dirt and dust during storage on the project. Lamps shall be taken directly from the cartons and installed in the fixture with special care so that they do not become dusty and are not soiled in the operation.

R. Lamps installed in fixtures using dimming ballasts shall be burned in at 100% rated output by the Contractor for a minimum of 100 hours as recommended by the ballast manufacturer.

S. All new lamps shall be operational at the Substantial Completion of the project.

3.2 ADJUSTING AND CLEANING

A. Align luminaires and clean lenses and diffusers at completion of Work. Clean paint splatters, dirt, and debris from installed luminaires.

B. Aim and adjust luminaires as indicated on Drawings or as directed by the Architect/Engineer.

C. Touch up luminaire finish at completion of work.

3.3 INTERFACE WITH OTHER PRODUCTS

A. Interface with air handling accessories furnished and installed under Division 23.

3.4 FIELD QUALITY CONTROL

A. Operate each luminaire after installation and connection. Inspect for proper connection and operation.

3.5 ALL FIXTURE CONNECTIONS INCLUDING MASTER-SATELLITE

A. Direct box or conduit connections for surface and recessed fixtures. Flexible metal conduit from a J-box for recessed lay-in light fixtures. Flexible metal conduit shall be minimum 3/8" minimum diameter and six foot maximum length. Flexible whip between master and slave fixtures may be supported off of the ceiling grid wires. Conduit length shall allow movement of the fixture for maintenance purposes. Minimum wire size shall be #18 AWG for single fixture or master-slave fixture.

B. The flexible connectors shall be all steel, galvanized, clamp type with locknut or snap-in connector including those used on the master-slave unit.

END OF SECTION

MOORE PUBLIC SCHOOLS
BOARD OF EDUCATION

MOORE Public Schools
LEARNING FOR LIFE

MOORE PUBLIC SCHOOLS DISTRICT NO. I-2
CLEVELAND COUNTY MOORE, OKLAHOMA

CLASSROOM ADDITION
HIGHLAND WEST
JUNIOR HIGH SCHOOL

901 NORTH SANTA FE
MOORE , OK. 73160

AGP | the Abla Griffin Partnership

201 N. BROADWAY SUITE 210 MOORE, OK. 73160
405.735.3477 AGP@theAGP.net www.the AGP.net

STATE OF OKLAHOMA
MICHAEL L. ABLA
2639
OKLAHOMA CITY, OKLAHOMA
LICENSED ARCHITECT

7/31/23

CONSTRUCTION MANAGER

OMNI CONSTRUCTION

1909 S. EASTERN AVE.
MOORE, OK 73160

INDEX TO DRAWINGS

SHEET NUMBER	DESCRIPTION
C	COVER SHEET
--	TOPOGRAPHIC SURVEY - FOR INFORMATION ONLY
G100	LEGENDS / MAPS / ETC.
C1.00	DEMOLITION PLAN
C2.00	SITE PLAN
C3.00	PAVING / GRADING PLAN
C4.00	UTILITY PLAN
C5.00	EROSION CONTROL PLAN
C5.01	EROSION CONTROL DETAILS
C6.00	STANDARD DETAILS
C6.01	STANDARD DETAILS
C700	SIDEWALK DETAILS
DETENTION POND PLANS	
C0.00	DETENTION COVER
C3.01	DRAINAGE - HISTORIC
C3.02	DRAINAGE - DEVELOPED
C3.03	DETENTION POND PLAN
C5.00	EROSION CONTROL PLANS
C5.01	EROSION CONTROL DETAILS
S100	GENERAL NOTES
S101	GENERAL NOTES
S102	GENERAL NOTES
S103	DETAILS
S104	DETAILS
S105	DETAILS
S106	SPECIAL INSPECTIONS
S200	OVERALL FOUNDATION PLAN
S201	FOUNDATION PLAN - AREA "A"
S202	FOUNDATION PLAN - AREA "B"
S203	FOUNDATION PLAN - AREA "C"
S204	FOUNDATION PLAN - AREA "D"
S300	OVERALL FRAMING PLAN
S301	FRAMING PLAN - AREA "A"
S302	FRAMING PLAN - AREA "B"
S303	FRAMING PLAN - AREA "C"
S304	FRAMING PLAN - AREA "D"
S501	FOUNDATION SECTIONS
S601	FRAMING SECTIONS
S602	FRAMING SECTIONS
S603	FRAMING SECTIONS
A100	LIFE SAFETY PLAN
A101	DEMOLITION PLAN
A102	OVERALL FLOOR PLAN - CLASSROOM AREA / OVERALL FLOOR PLAN - OFFICE AREA
A103	FLOOR PLAN - AREA "A"
A104	FLOOR PLAN - AREA "B"
A105	FLOOR PLAN - AREA "C"
A106	FLOOR PLAN - AREA "D" / MILLWORK ROOM #29
A107	EXTERIOR PLAN - MAIN BUILDING
A108	EXTERIOR PLAN - EXISTING GYM - ALTERNATE #1
A109	ENLARGED FLOOR PLANS / INTERIOR ELEVATIONS
A110	REFLECTED CEILING PLAN - AREA "A"
A111	REFLECTED CEILING PLAN - AREA "B"
A112	REFLECTED CEILING PLAN - AREA "C"
A113	REFLECTED CEILING PLAN - AREA "D"
A114	ROOF PLAN - CLASSROOM AREA / ROOF PLAN - OFFICE AREA
A115	ROOF DETAILS
A116	LVT & CARPET DIM. / DESIGN PLAN - AREA "A"
A117	LVT & CARPET DIM. / DESIGN PLAN - AREA "B"
A118	LVT & CARPET DIM. / DESIGN PLAN - AREA "C"
A119	LVT & CARPET DIM. / DESIGN PLAN - AREA "D"
A120	EQUIPMENT FLOOR PLAN - AREA "A" / EQUIPMENT SCHEDULE
A121	EQUIPMENT FLOOR PLAN - AREA "B"
A122	EQUIPMENT FLOOR PLAN - AREA "C"
A123	EQUIPMENT FLOOR PLAN - AREA "D"
A124	ENLARGED FLR PLAN - TYPICAL LAB EQUIP. & STORAGE ROOM / ENLARGED PLAN ROOM #16
A201	BUILDING ELEVATIONS DEMOLITION
A201a	BUILDING ELEVATIONS
A202	BUILDING ELEVATIONS DEMOLITION
A202a	BUILDING ELEVATIONS
A203	BUILDING ELEVATIONS - ALTERNATE #1
A301	BUILDING SECTIONS
A302	BUILDING SECTION
A303	WALL SECTIONS / DETAILS
A304	WALL SECTIONS / DETAILS
A305	WALL SECTIONS / DETAILS
A401	INTERIOR ELEVATIONS
A501	DETAILS

SHEET NUMBER	DESCRIPTION
A601	ROOM FINISH SCHEDULE / COLOR SCHEDULE
A602	DOOR SCHEDULE / DOOR ELEVATIONS / FRAME ELEVATIONS
A701	MILLWORK DETAILS
A702	MILLWORK DETAILS
A703	MILLWORK DETAILS
F000	FIRE SPRINKLER RISER DIAGRAM / NOTES
F001	FIRE PROTECTION PLAN - SITE
F101	FIRE PROTECTION PLAN - AREA "A"
F102	FIRE PROTECTION PLAN - AREA "B"
F103	FIRE PROTECTION PLAN - AREA "C"
F104	FIRE PROTECTION PLAN - AREA "D"
P000	GENERAL PLUMBING NOTES
PD101	PLUMBING DEMOLITION PLAN - OVERALL
P001	PLUMBING PLAN - SITE
P101	PLUMBING PLAN - BELOW GRADE - AREA "A"
P102	PLUMBING PLAN - BELOW GRADE - AREA "B"
P103	PLUMBING PLAN - BELOW GRADE - AREA "C"
P104	PLUMBING PLAN - BELOW GRADE - AREA "D"
P110	PLUMBING PLAN - ABOVE GRADE - AREA "A"
P111	PLUMBING PLAN - ABOVE GRADE - AREA "B"
P112	PLUMBING PLAN - ABOVE GRADE - AREA "C"
P113	PLUMBING PLAN - ABOVE GRADE - AREA "D"
P201	PLUMBING PLAN - ROOF
P301	PLUMBING ISOMETRIC WASTE & VENT
P302	PLUMBING ISOMETRIC WATER SUPPLY
P501	DETAILS
P601	SCHEDULES
M000	MECHANICAL NOTES
M001	MECHANICAL SITE PLAN
M002	MECH. OVERALL PLAN - CLAQSSROOM AREA / MECH. OVERALL PLAN - OFFICE AREA
M101	MECHANICAL PLAN - AREA "A"
M102	MECHANICAL PLAN - AREA "B"
M103	MECHANICAL PLAN - AREA "C"
M104	MECHANICAL PLAN - AREA "D"
M110	MECHANICAL OVERALL ROOF PLAN
M111	MECH. ROOF PLAN - CLASSROOM AREA / MECH. ROOF PLAN - OFFICE AREA
M501	DETAILS
M502	DETAILS
M601	SCHEDULES
T000	TECHNOLOGY LEGENDS / NOTES
T100	TECHNOLOGY SITE PLAN
T101	TECHNOLOGY SITE PLAN ENLARGED
T201	TECHNOLOGY PLAN - AREA A
T202	TECHNOLOGY PLAN - AREA B
T203	TECHNOLOGY PLAN - AREA C
T204	TECHNOLOGY PLAN - AREA D
T301	IDF ROOM - I.T. 9
T401	DETAILS
T402	DETAILS
T403	DETAILS
T404	DETAILS
T501	SYSTEM SPECIFICATIONS
T502	SYSTEM SPECIFICATIONS
T503	SYSTEM SPECIFICATIONS
T504	SYSTEM SPECIFICATIONS
E000	ELECTRICAL NOTES / SCHEDULES
E001	ELECTRICAL SITE PLAN
E002	OVERALL LIGHTING PLAN - CLASSROOM AREA / OVERALL LIGHTING PLAN - OFFICE
E101	ELECTRICAL LIGHTING PLAN AREA "A"
E102	ELECTRICAL LIGHTING PLAN AREA "B"
E103	ELECTRICAL LIGHTING PLAN AREA "C"
E104	ELECTRICAL LIGHTING PLAN AREA "D"
E200	OVERALL POWER PLAN - CLASSROOM AREA / OVERALL POWER PLAN - OFFICE
E201	ELECTRICAL POWER \PLAN AREA "A"
E202	ELECTRICAL POWER PLAN AREA "B"
E203	ELECTRICAL POWER \PLAN AREA "C"
E204	ELECTRICAL POWER PLAN AREA "D"
E210	ELECTRICAL POWER PLAN - SITE ROOF
E211	OVERALL POWER PLAN - CLASSROOM AREA / OVERALL POWER PLAN - OFFICE
E401	ELECTRICAL ONE-LINE DIAGRAM / SCHEDULE
E501	DETAILS
E601	SCHEDULES

CLASSROOM ADDITION
HIGHLAND WEST JR. HIGH
SET NO.

STRUCTURAL

KFC ENGINEERING

205 NW 63rd, SUITE 390
OKLAHOMA CITY, OK 73116

MECHANICAL/ELECTRICAL/PLUMBING

SALAS O'BRIEN

2600 VAN BUREN ST., SUITE 2604
NORMAN, OKLAHOMA 73072

CIVIL

CEDAR CREEK

11912 N. PENNSYLVANIA AVE., SUITE D4
OKLAHOMA CITY, OK 73120

revisions:

sheet no:
C

date:
JULY 2023

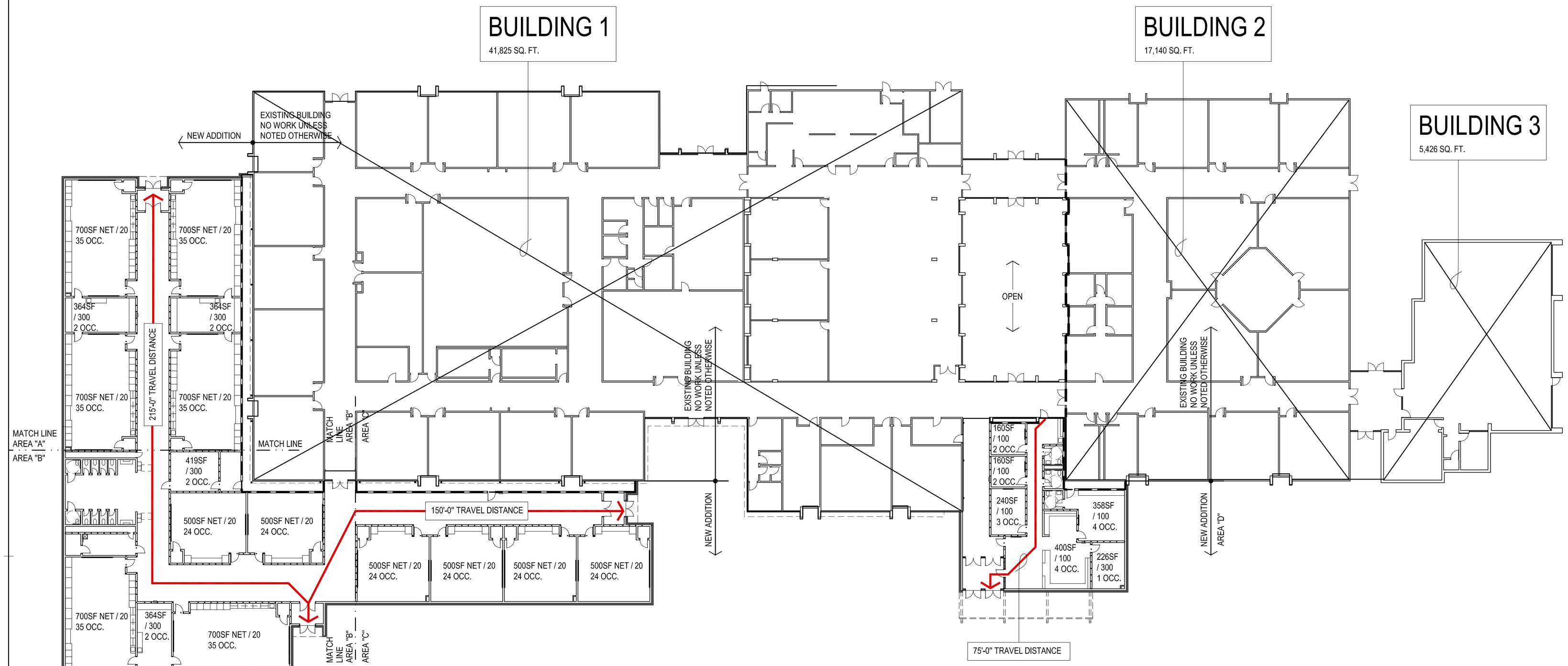

NORTH

1 LIFE SAFETY PLAN

1" = 20'-0"

NOTE:
THIS PLAN INDICATES WALL TO CLOSE OUT TO STRUCTURE DUE TO FIRE CODE REQUIREMENTS.
IT IS NOT A REPRESENTATION OF ALL WALLS REQ'D TO CLOSE OUT FOR STRUCTURAL / NO CEILING PRESENT / WALL @ " CLOUDS" ETC. LOCATIONS

CONSTRUCTION DATA (TABLE 504.4):

OCCUPANCY -	E
CONSTRUCTION TYPE -	TYPE II - B
BASIC ALLOWABLE AREA -	58,000 S.F. SPRINKLED ONE STORY
ALLOWABLE STORIES -	3
ACTUAL STORIES -	1
ACTUAL HEIGHT -	16'-8" / 17'-4"

BUILDING SIZES:

ADDITION AREA A, B & C:	1 STORY @ 24,465 S.F.
ADDITION AREA D:	1 STORY @ 3,825 S.F.

STRUCTURAL FIRE PROTECTION (TABLE 601):

EXTERIOR BEARING WALLS	0 HOUR
INTERIOR BEARING WALLS	NONCOMBUSTIBLE
EXTERIOR NONBEARING WALLS	NONCOMBUSTIBLE
COLUMNS	0 HOUR
BEAMS	0 HOUR
PERMANENT PARTITIONS	NONCOMBUSTIBLE
FLOOR ASSEMBLIES	0 HOUR
ROOF ASSEMBLIES	0 HOUR
EXTERIOR OPENINGS	N/A

PASSIVE FIRE SAFETY SYSTEM:
PORTABLE FIRE EXTINGUISHERS (RE: SHEETS A120 - A124)
TRAVEL DISTANCE = 250'-0" MAX.
DEADEND - 50'-0" MAX.
ACTUAL DEADEND - NONE

ACTIVE FIRE SAFETY SYSTEMS THROUGHOUT NEW ADDITIONS:
FIRE SPRINKLER SYSTEM (UPDATED TO MEET CURRENT CODE)
FIRE ALARM SYSTEM
SMOKE DETECTION
AUTOMATIC AIR HANDLING EQUIP. SHUTDOWN
EXIT LIGHTS/EMERGENCY LIGHTS BATTERY

ACTIVE FIRE SAFETY SYSTEMS THROUGHOUT EXISTING BUILDING(S) :
FIRE ALARM SYSTEM
SMOKE DETECTION
AUTOMATIC AIR HANDLING EQUIP. SHUTDOWN
EXIT LIGHTS/EMERGENCY LIGHTS BATTERY

CODES/REGULATIONS USED (CITY OF MOORE) AUTHORITY HAVING JURISDICTION:
2015 IBC - INTERNATIONAL BUILDING CODE
AMERICAN WITH DISABILITIES ACT ACCESSIBILITY GUIDELINES
2014 NATIONAL ELECTRICAL CODE
2015 INTERNATIONAL PLUMBING CODE
2015 INTERNATIONAL MECHANICAL CODE
2015 INTERNATIONAL FIRE CODE
2015 ENERGY CONSERVATION CODE
ASSOCIATED SUPPLEMENTS TO EACH CODE

OCCUPANT LOAD (TABLE 1004.1.2):

AREAS A, B, & C
CLASSROOM AREA NET RE: PLAN = 354 OCCUPANTS
STORAGE AREA RE: PLAN = 8 OCCUPANTS
TOTAL OCCUPANTS = 362

AREA D
OFFICE AREA RE: PLAN = 15 OCCUPANTS
STORAGE AREA RE: PLAN = 2 OCCUPANTS
TOTAL OCCUPANTS = 17

EGRESS WIDTH:

ADDITION AREA A, B & C: REQUIRED 73"
ADDITION AREA A, B & C: PROVIDED 216" (ADD'L 144" ADDED TO EXIST.)

ADDITION AREA D: REQUIRED 4"
ADDITION AREA D: PROVIDED 144"

PLUMBING FIXTURES (2902.1):

TOTAL OCCUPANT LOAD (ADDITIONAL)
(EDUCATION) = 362

ADDITIONAL REQUIRED:	TOTAL PROVIDED:
WATER CLOSETS = 8	WATER CLOSETS = 7
LAVATORIES = 8	URINALS = 3
DRINKING FOUNTAINS = 4	LAVATORIES = 12
SERVICE SINK = 1	DRINKING FOUNTAINS = 4
	SERVICE SINK = 1

DENOTES 1 HR. RATED PARTITIONS CLOSE-OUT TO BOTTOM OF DECKING - CLOSE-OUT PARTITIONS TO BE CMU WHERE INDICATED ON STRUCTURAL FOR LOAD BEARING CONDITIONS. ALL OTHER INDICATED LOCATIONS TO BE CONSTRUCTED OF 1 LAYER OF 5/8" FIRE RATED GYP. BOARD EACH SIDE ON 3 5/8" METAL STUDS @ 16" O.C. STAGGER ALL JOINTS & PROVIDE FIRE TAPE. SEAL ALL PENETRATIONS W/ CONTINUOUS FIRE STOPPING INSULATION &/OR SEALANT.

DENOTES FIRE WALL BETWEEN NEW ADDITION & EXISTING BUILDING - 2 HOUR AS PER TABLE 706.4

AGP
the Abla Griffin Partnership L.L.C.
201 N. BROADWAY
SUITE 210
MOORE, OK. 73160
405.735.3477
AGP@theAGP.net
www.theAGP.net

CEDAR CREEK
CIVIL

KFC ENGINEERING
STRUCTURAL

SALAS O'BRIEN
MECHANICAL / ELECTRICAL

STATE OF OKLAHOMA
MICHAEL L. ABLA
2639
REGISTERED ARCHITECT
7/31/23

CG
drawn by

MA
checked by

JULY 2023
date

revisions

MOORE PUBLIC SCHOOLS
BOARD OF EDUCATION
MOORE, OKLAHOMA

MOORE Public Schools
LEARNING FOR LIFE

CLASSROOM ADDITION
HIGHLAND WEST
JUNIOR HIGH SCHOOL

sheet no:

A100

LIFE SAFETY PLAN

OWNERSHIP USE OF DOCUMENTS:

AGP EXPRESSLY RESERVES ITS COPYRIGHT AND OTHER PROPERTY RIGHTS OF ALL PLANS AND DRAWINGS DESIGNED AND/OR PRODUCED. PLANS AND DRAWINGS ARE NOT TO BE REPRODUCED IN ANY FORM OR MANNER WITHOUT THE EXPRESSED WRITTEN CONSENT OF AGP.

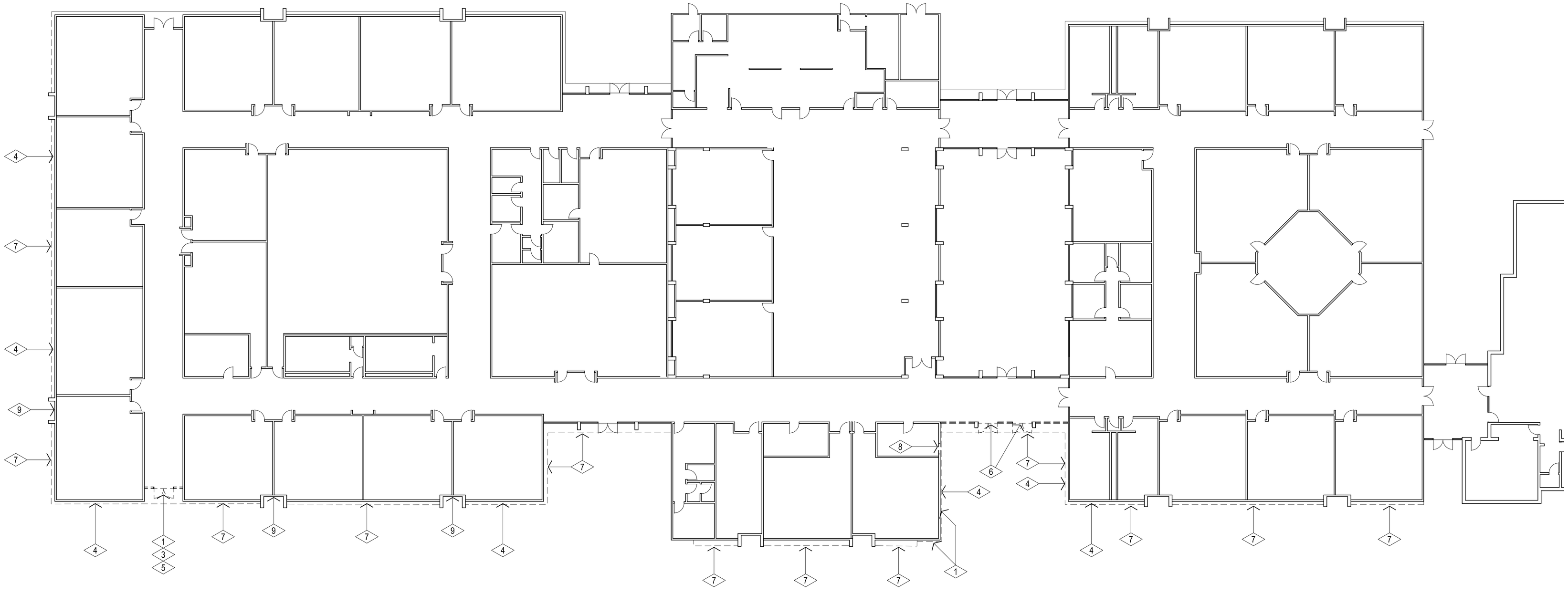

1 DEMOLITION PLAN

1/16" = 1'-0"

NORTH

GENERAL NOTES:

1. FILL, GRADE, & PREPARE ALL EXCAVATED AREAS TO RECEIVE NEW SITE FEATURES.
2. CONTRACTOR TO VISIT SITE PRIOR TO PREPARING BID, & VERIFY ALL ITEMS TO BE DEMOLISHED. ANY ADDITIONAL ITEMS REQUIRING DEMOLITION THAT ARE NOT INCLUDED IN THESE DOCUMENTS SHOULD BE BROUGHT TO THE IMMEDIATE ATTENTION OF THE ARCHITECT AND INCLUDED IN THE BASE BID.
3. EXISTING UNDERGROUND UTILITY LOCATIONS & CONTOUR INFORMATION HAVE BEEN OBTAINED FROM THE BEST AVAILABLE SOURCES. THE CONTRACTOR SHALL FIELD VERIFY ALL EXISTING CONDITIONS PRIOR TO COMMENCING WORK & COORDINATE W/ ARCHITECT.
4. CONTRACTOR IS TO FIELD VERIFY ALL EXISTING ELEVATIONS PRIOR TO STARTING EARTHWORK - AND ADJUST ACCORDINGLY AS DIRECTED BY THE ARCHITECT.
5. DURING ALL EXISTING UTILITY REVISIONS - TEMPORARY SERVICE IS TO BE PROVIDED @ ALL EFFECTED BUILDINGS.
6. ALL SALVAGEABLE ITEMS TO REMAIN OWNER'S PROPERTY & SHALL BE STORED OR DISPOSED OF AS PER OWNER'S INSTRUCTIONS.
7. CONSTRUCTION SHALL MEET ALL APPLICABLE CODES, ORDINANCES, REGULATIONS & STANDARDS REQUIRED BY THE CITY OF MOORE, OKLAHOMA.
8. CONSTRUCTION SHALL MEET ALL APPLICABLE REQUIREMENTS OF THE AMERICANS W/ DISABILITIES ACT INCLUDING ANY SUPPLEMENTAL REQUIREMENTS BY THE CITY OF MOORE, OKLAHOMA.
9. CONTRACTOR SHALL COORDINATE ACCESS TO SITE W/ OWNER PRIOR TO STARTING WORK. OBTAIN APPROVAL FROM OWNER FOR ON-SITE MATERIAL STORAGE, ETC. CONTRACTOR SHALL PROVIDE PROPER SEPARATION BTWN. WORK & STUDENTS.

DEMOLITION NOTES:

(RE: CIVIL SHEETS FOR ADDITIONAL DEMOLITION INFORMATION)

1. REMOVE EXISTING DOORS & FRAME - PREPARE OPENING TO RECEIVE NEW FIRE RATED DOORS & FRAMES & STUD IN-FILL
2. REMOVE EXISTING GUTTERS AND DOWNSPOUTS AS REQUIRED FOR NEW ADDITION. MODIFY GUTTERS TO REMIAN AS REQUIRED FOR PROPER OPERATION
3. REMOVE EXISTING SOFFIT PANEL & EXISTING STRUCTURE AS NECESSARY TO INSTALL NEW CEILING - RE: 1A111
4. REMOVE ALL EXISTING WALL MOUNTED ITEMS TO BE SALVAGED. RE: ELECTRICAL & COORDINATE W/ ARCHITECT & OWNER.
5. DEMOLISH EXISTING CONCRETE STOOP & PREPARE SUBSTRATE TO RECEIVE NEW CONCRETE SLAB, RE: A102
6. REMOVE EXIST. DOORS, FRAME &.STOREFRONT SYSTEM. REPAIR / MODIFY EXISTING CEILING TO RECEIVE NEW TRIM. MODIFY / REPAIR EXISTING FLOOR TILE AS REQUIRED MATCH EXISTING, RE: A102 & A106
7. REMOVE EXIST. MANSARD ROOF PANE & FRAMING AS REQUIRED FOR NEW ADDITION(S) RE: ELEVATIONS
8. REMOVE EXISTING WALL AS REQUIRED TO INSTALL NEW 3'-4"x7'-4" HOLLOW METAL FRAME & WOOD DOOR, RE: STRUCTURAL
9. REMOVE EXISTING WINDOW FRAME - PREPARE OPENING TO RECEIVE NEW SHEATHING ON 3 5/8" METAL STUDS @ 16" O.C. W/ 5/8" FIRE RATED GYP ON EXISTING CLASSROOM SIDE, PAINT ENTIRE WALL

AGP
the Abla Griffin Partnership L.L.C.

201 N. BROADWAY
SUITE 210
MOORE, OK. 73160
405.735.3477
AGP@theAGP.net
www.theAGP.net

CEDAR CREEK
CIVIL

KFC ENGINEERING
STRUCTURAL

SALAS O'BRIEN
MECHANICAL / ELECTRICAL

STATE OF OKLAHOMA
MICHAEL L. ABLA
2639
REGISTERED ARCHITECT
OKLAHOMA CITY, OKLAHOMA

7/31/23

CG
drawn by

MA
checked by

JULY 2023
date

revisions

MOORE PUBLIC SCHOOLS
BOARD OF EDUCATION
MOORE, OKLAHOMA

MOORE Public Schools
LEARNING FOR LIFE

CLASSROOM ADDITION
HIGHLAND WEST
JUNIOR HIGH SCHOOL

sheet no:

A101

DEMOLITION FLOOR PLAN

OWNERSHIP USE OF DOCUMENTS:

AGP EXPRESSLY RESERVES ITS COPYRIGHT AND OTHER PROPERTY RIGHTS OF ALL PLANS AND DRAWINGS DESIGNED AND/OR PRODUCED. PLANS AND DRAWINGS ARE NOT TO BE REPRODUCED IN ANY FORM OR MANNER WITHOUT THE EXPRESSED WRITTEN CONSENT OF AGP.

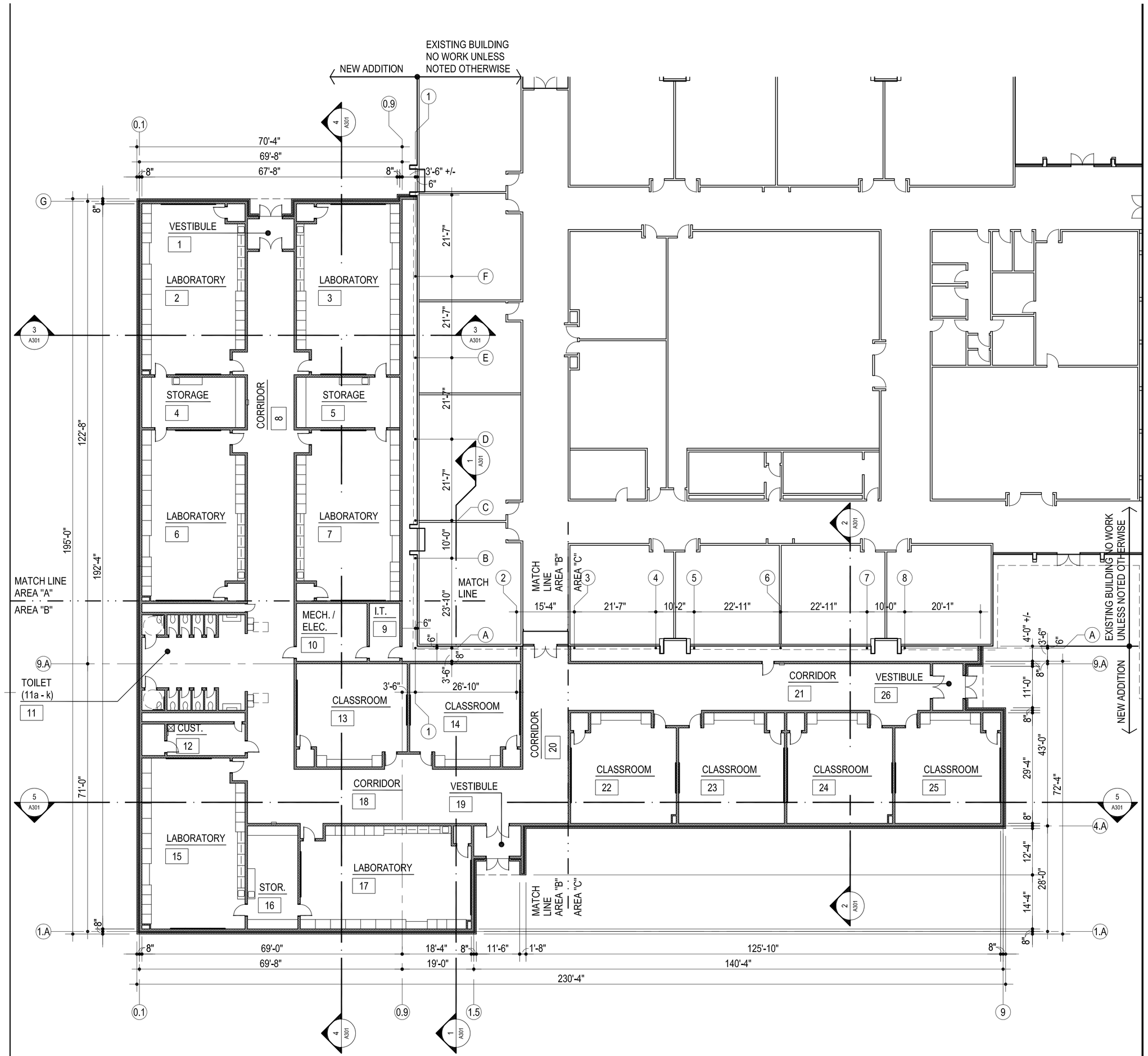

NORTH

1 OVERALL FLOOR PLAN - CLASSROOM AREA

1/16" = 1'-0" 24,465 sq. ft.

MISCELLANEOUS NOTES:

1. F.E.C. - FIRE EXTINGUISHER AND CABINET
2. REFER A116, A117 & A118 FOR FLOORING FINISH LAYOUT

DENOTES ROOM NAME
DORM ROOM
102
DENOTES ROOM NUMBER
102
DENOTES DOOR NUMBER

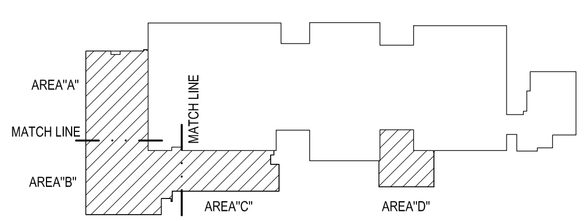

KEY PLAN

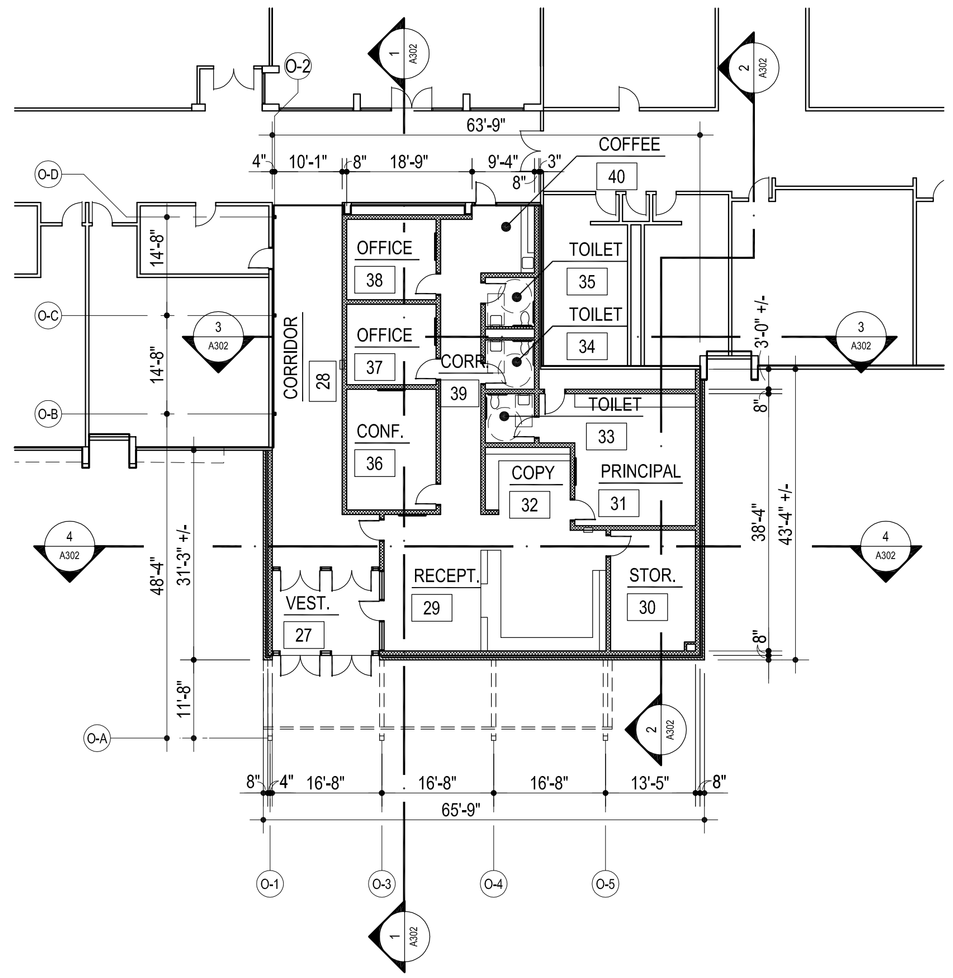

NORTH

2 OVERALL FLOOR PLAN - OFFICE AREA

1/16" = 1'-0" 3,825 sq. ft.

AGP
the Abla Griffin Partnership L.L.C.
201 N. BROADWAY
SUITE 210
MOORE, OK. 73160
405.735.3477
AGP@theAGP.net
www.theAGP.net

CEDAR CREEK
CIVIL

KFC ENGINEERING
STRUCTURAL

SALAS O'BRIEN
MECHANICAL / ELECTRICAL

STATE OF OKLAHOMA
MICHAEL L. ABLA
2639
REGISTERED ARCHITECT
7/31/23

CG
drawn by

MA
checked by

JULY 2023
date

revisions

MOORE PUBLIC SCHOOLS
BOARD OF EDUCATION
MOORE, OKLAHOMA

MOORE Public Schools
LEARNING FOR LIFE

CLASSROOM ADDITION
HIGHLAND WEST
JUNIOR HIGH SCHOOL

sheet no:

A102

OVERALL FLOOR PLAN

OWNERSHIP USE OF DOCUMENTS:

AGP EXPRESSLY RESERVES ITS COPYRIGHT AND OTHER PROPERTY RIGHTS OF ALL PLANS AND DRAWINGS DESIGNED AND/OR PRODUCED. PLANS AND DRAWINGS ARE NOT TO BE REPRODUCED IN ANY FORM OR MANNER WITHOUT THE EXPRESSED WRITTEN CONSENT OF AGP.

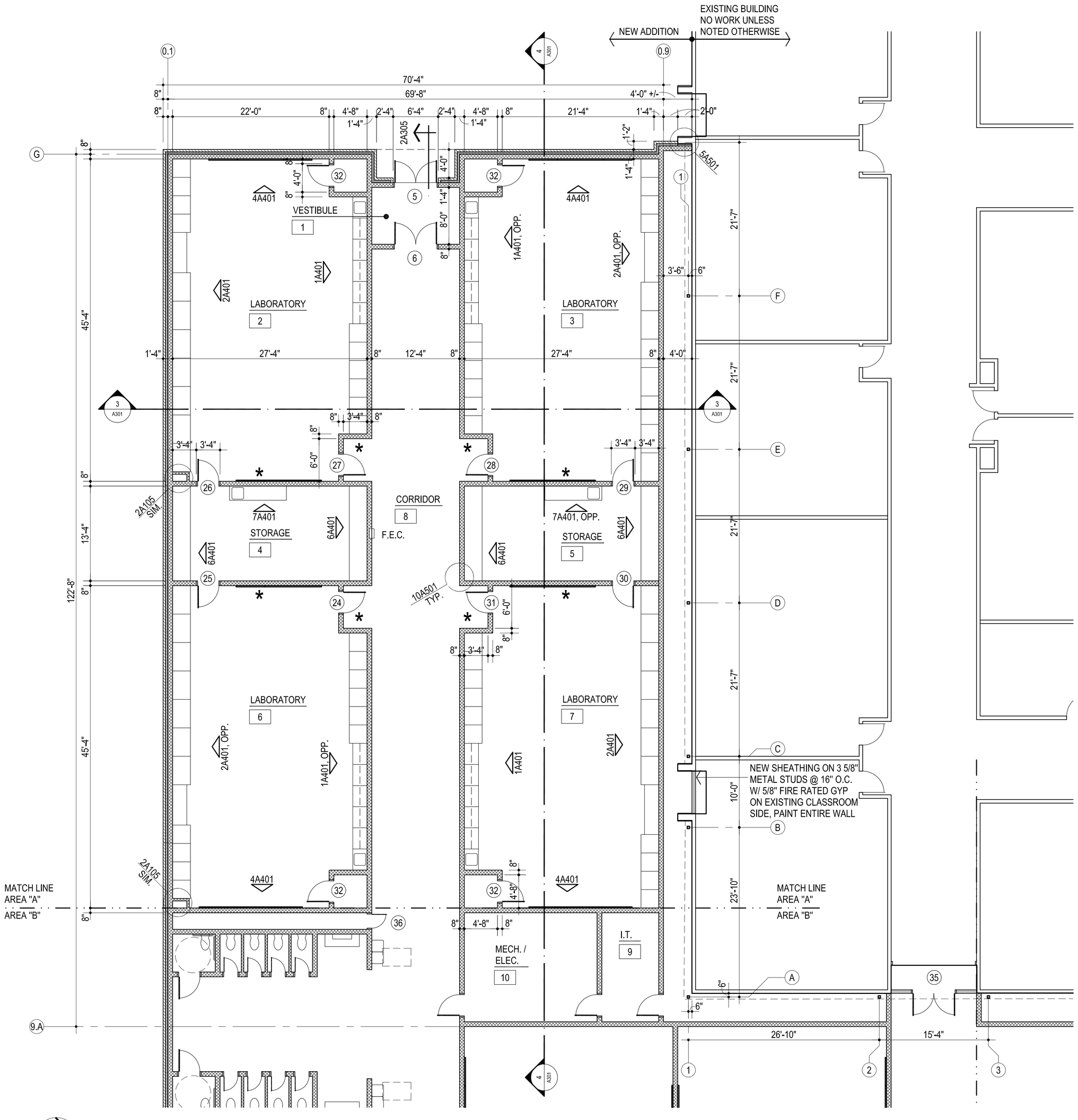

1 FLOOR PLAN - AREA "A"

1/8" = 1'-0"

NORTH

MISCELLANEOUS NOTES:

1. F.E.C. - FIRE EXTINGUISHER AND CABINET
2. REFER A116, A117 & A118 FOR FLOORING FINISH LAYOUT
3. * INDICATES ROOM WALLS & RECESS WALLS PAINTED ACCENT COLOR
4. PROVIDE BULLNOSE @ ALL EXPOSED CMU CORNERS & ENDS (b.n.)

DENOTES ROOM NAME

DORM ROOM

102

DENOTES ROOM NUMBER

102

DENOTES DOOR NUMBER

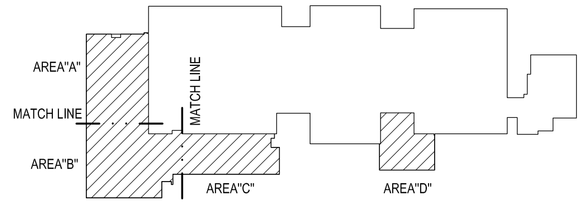

KEY PLAN

AGP
the Abla Griffin Partnership L.L.C.
201 N. BROADWAY
SUITE 210
MOORE, OK. 73160
405.735.3477
AGP@theAGP.net
www.theAGP.net

CEDAR CREEK
CIVIL

KFC ENGINEERING
STRUCTURAL

SALAS O'BRIEN
MECHANICAL / ELECTRICAL

STATE OF OKLAHOMA
MICHAEL L. ABLA
2639
REGISTERED ARCHITECT
OKLAHOMA CITY, OKLAHOMA
7/31/23

CG
drawn by

MA
checked by

JULY 2023
date

revisions

MOORE PUBLIC SCHOOLS
BOARD OF EDUCATION
MOORE, OKLAHOMA

MOORE Public Schools
LEARNING FOR LIFE

CLASSROOM ADDITION
HIGHLAND WEST
JUNIOR HIGH SCHOOL

sheet no:

A103

OVERALL FLOOR PLAN

OWNERSHIP USE OF DOCUMENTS:

AGP EXPRESSLY RESERVES ITS COPYRIGHT AND OTHER PROPERTY RIGHTS OF ALL PLANS AND DRAWINGS DESIGNED AND/OR PRODUCED. PLANS AND DRAWINGS ARE NOT TO BE REPRODUCED IN ANY FORM OR MANNER WITHOUT THE EXPRESSED WRITTEN CONSENT OF AGP.

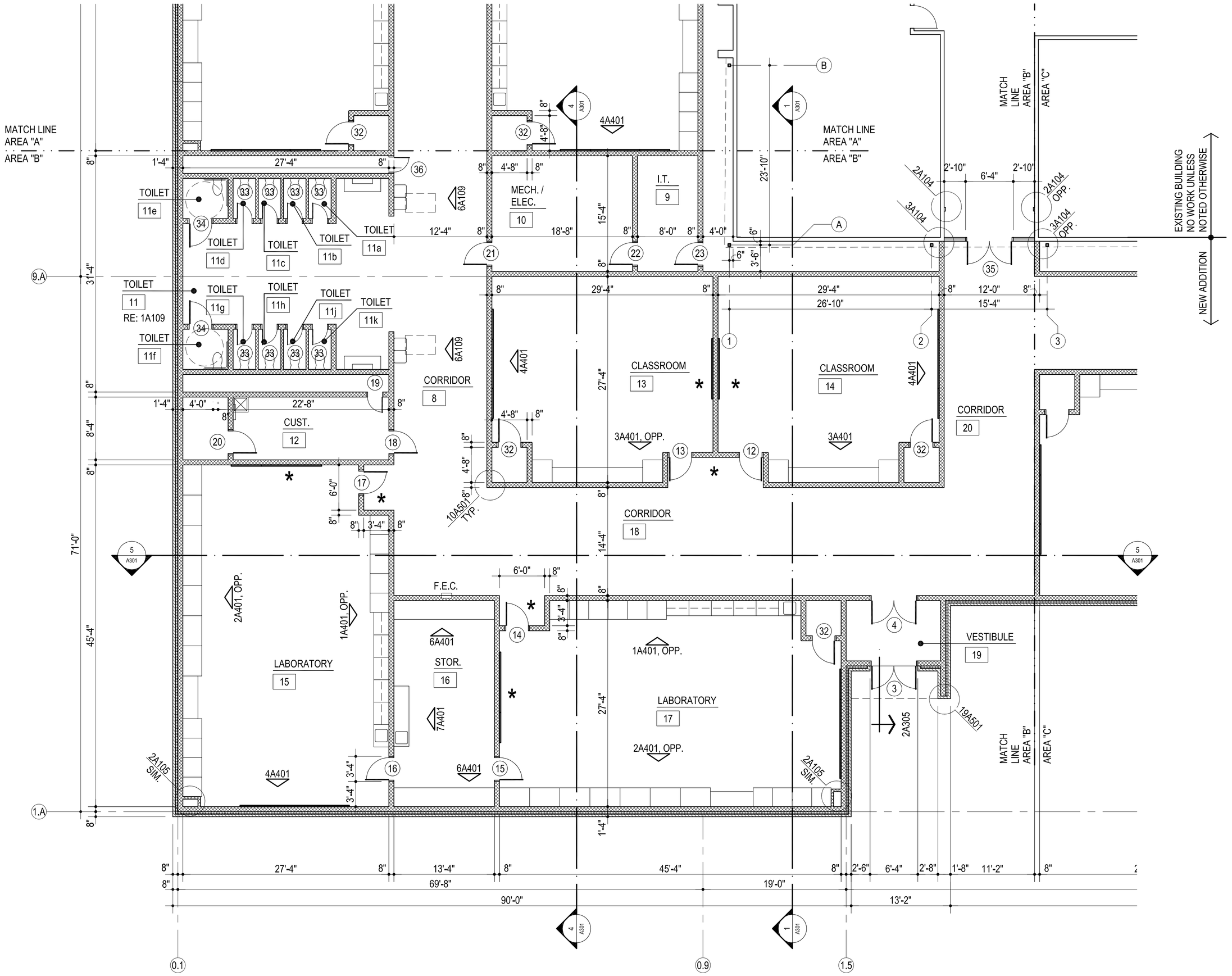

1 FLOOR PLAN - AREA "B"

1/8" = 1'-0"

NORTH

MISCELLANEOUS NOTES:

1. F.E.C. - FIRE EXTINGUISHER AND CABINET
2. REFER A116, A117 & A118 FOR FLOORING FINISH LAYOUT
3. * INDICATES ROOM WALLS & RECESS WALLS PAINTED ACCENT COLOR (3)
4. PROVIDE BULLNOSE @ ALL EXPOSED CMU CORNERS & ENDS (b.n.)

DENOTES ROOM NAME
DORM ROOM
102
DENOTES ROOM NUMBER
102
DENOTES DOOR NUMBER

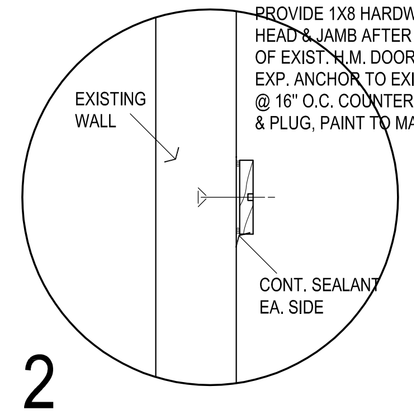

2

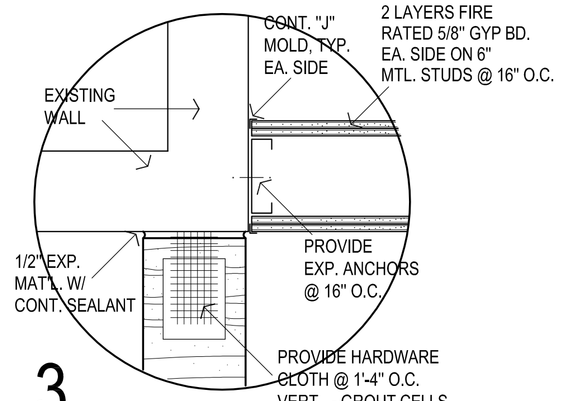

3

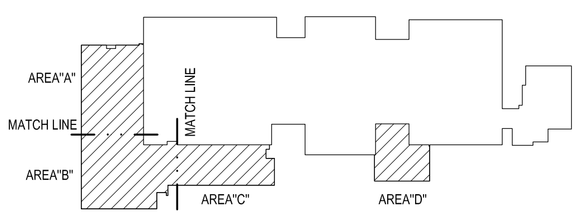

KEY PLAN

AGP
the Abla Griffin Partnership L.L.C.
201 N. BROADWAY
SUITE 210
MOORE, OK. 73160
405.735.3477
AGP@theAGP.net
www.theAGP.net

CEDAR CREEK
CIVIL

KFC ENGINEERING
STRUCTURAL

SALAS O'BRIEN
MECHANICAL / ELECTRICAL

STATE OF OKLAHOMA
MICHAEL L. ABLA 2639
REGISTERED ARCHITECT
7/31/23

CG
drawn by

MA
checked by

JULY 2023
date

revisions

MOORE PUBLIC SCHOOLS
BOARD OF EDUCATION
MOORE, OKLAHOMA

MOORE Public Schools
LEARNING FOR LIFE

CLASSROOM ADDITION
HIGHLAND WEST
JUNIOR HIGH SCHOOL

sheet no:

A104

OVERALL FLOOR PLAN

OWNERSHIP USE OF DOCUMENTS:

AGP EXPRESSLY RESERVES ITS COPYRIGHT AND OTHER PROPERTY RIGHTS OF ALL PLANS AND DRAWINGS DESIGNED AND/OR PRODUCED. PLANS AND DRAWINGS ARE NOT TO BE REPRODUCED IN ANY FORM OR MANNER WITHOUT THE EXPRESSED WRITTEN CONSENT OF AGP.

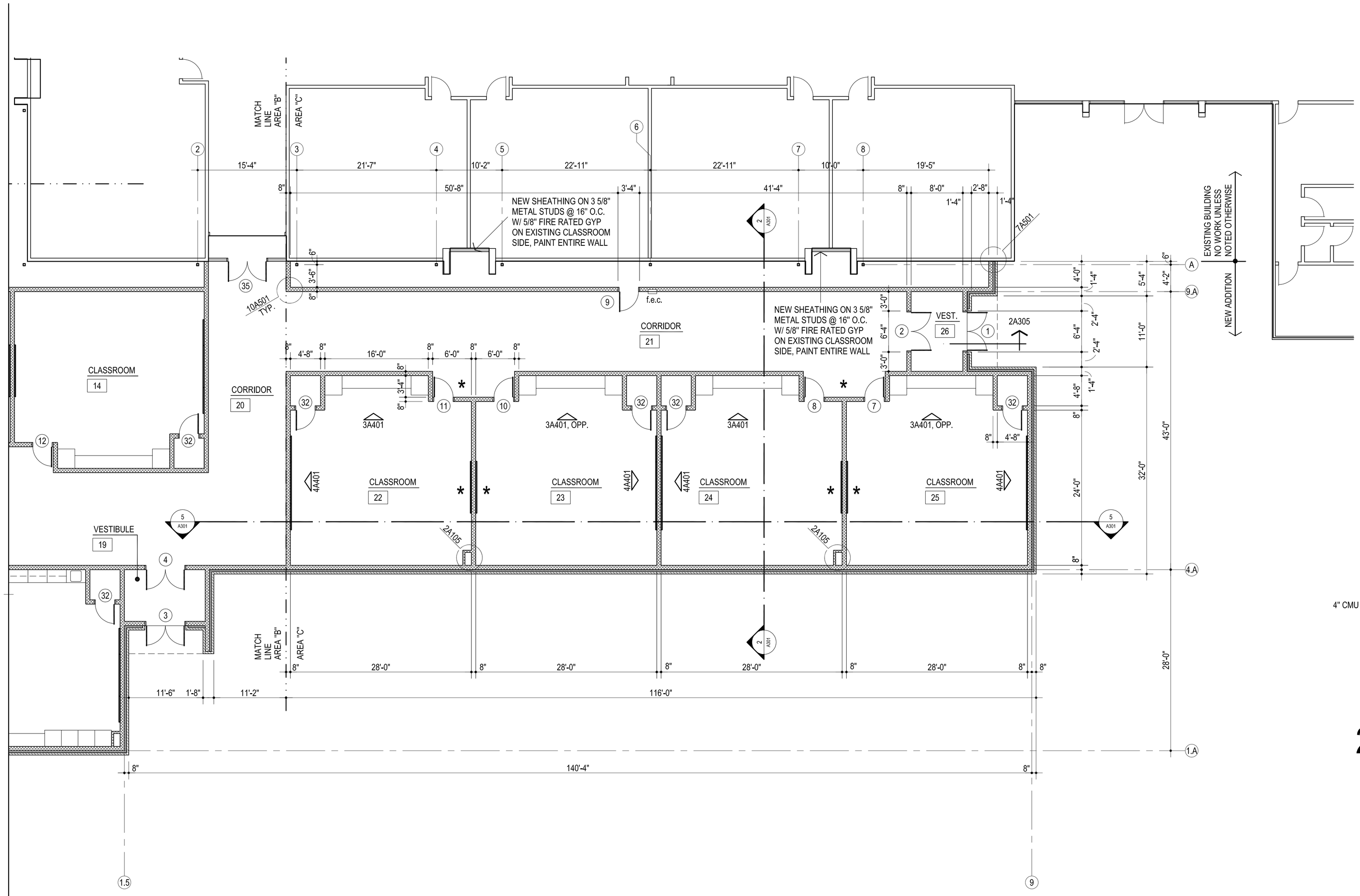

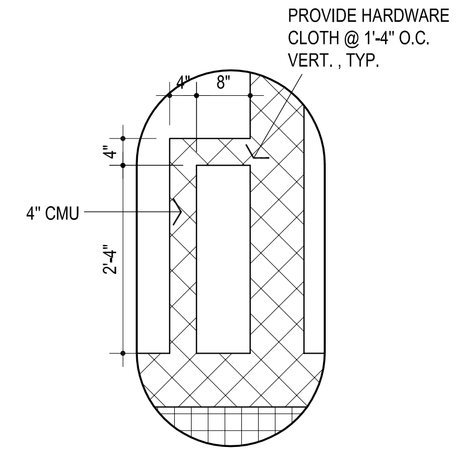

2 CHASE
3/4" = 1'-0"

1 FLOOR PLAN - AREA "C"
1/8" = 1'-0"

NORTH

MISCELLANEOUS NOTES:

1. F.E.C. - FIRE EXTINGUISHER AND CABINET
2. REFER A116, A117 & A118 FOR FLOORING FINISH LAYOUT
3. * INDICATES ROOM WALLS & RECESS WALLS PAINTED ACCENT COLOR
4. PROVIDE BULLNOSE @ ALL EXPOSED CMU CORNERS & ENDS (b.n.)

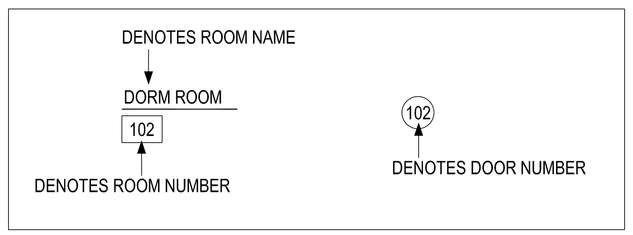

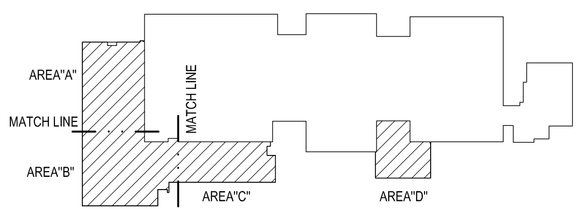

KEY PLAN

AGP
the Abla Griffin Partnership L.L.C.
201 N. BROADWAY
SUITE 210
MOORE, OK. 73160
405.735.3477
AGP@theAGP.net
www.theAGP.net

CEDAR CREEK
CIVIL

KFC ENGINEERING
STRUCTURAL

SALAS O'BRIEN
MECHANICAL / ELECTRICAL

STATE OF OKLAHOMA
MICHAEL L. ABLA
2639
REGISTERED ARCHITECT
7/31/23

CG
drawn by

MA
checked by

JULY 2023
date

revisions

MOORE PUBLIC SCHOOLS
BOARD OF EDUCATION
MOORE, OKLAHOMA

MOORE Public Schools
LEARNING FOR LIFE

CLASSROOM ADDITION
HIGHLAND WEST
JUNIOR HIGH SCHOOL

sheet no:

A105

OVERALL FLOOR PLAN

OWNERSHIP USE OF DOCUMENTS:

AGP EXPRESSLY RESERVES ITS COPYRIGHT AND OTHER PROPERTY RIGHTS OF ALL PLANS AND DRAWINGS DESIGNED AND/OR PRODUCED. PLANS AND DRAWINGS ARE NOT TO BE REPRODUCED IN ANY FORM OR MANNER WITHOUT THE EXPRESSED WRITTEN CONSENT OF AGP.

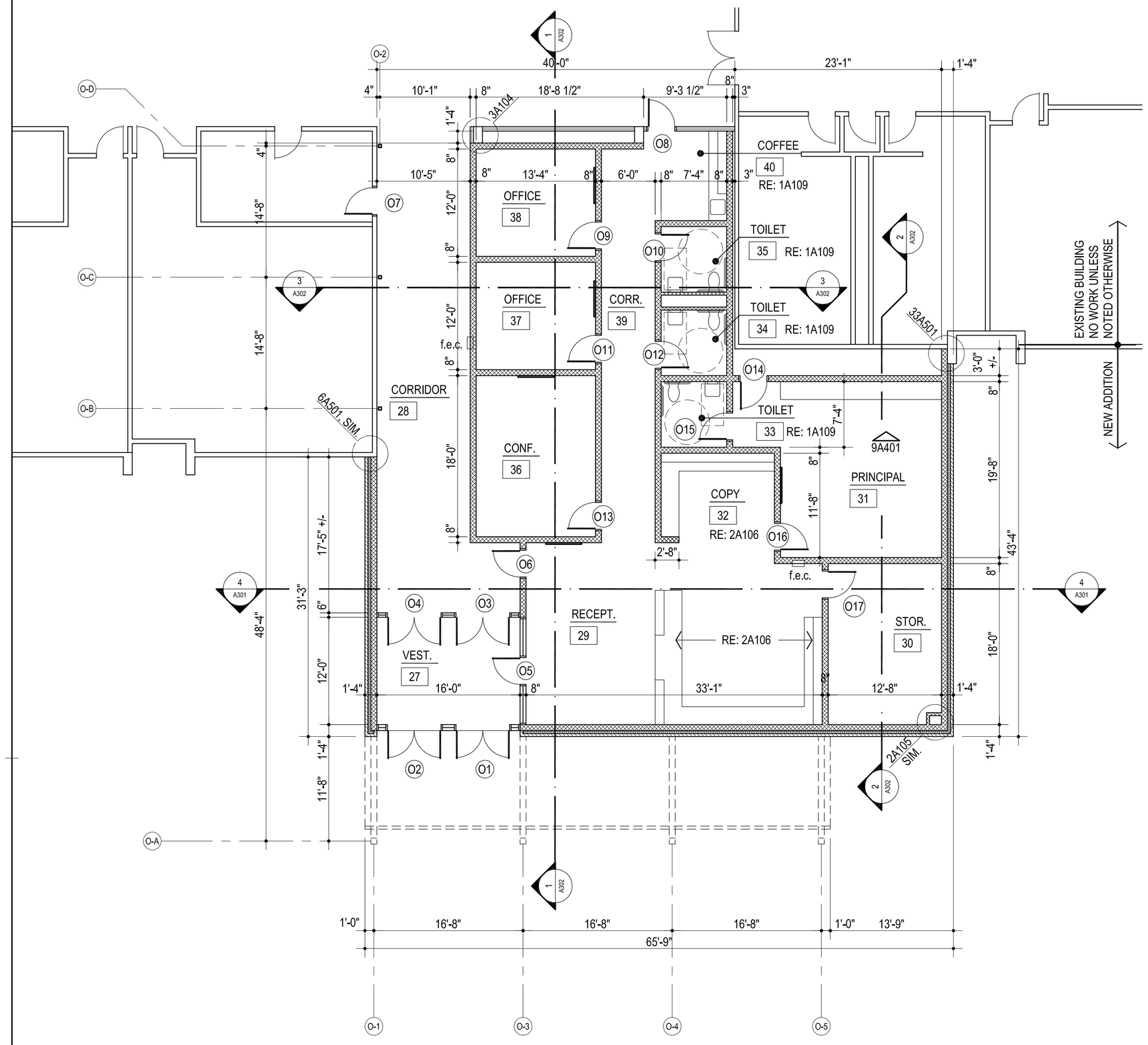

1 FLOOR PLAN - AREA "D"

1/8" = 1'-0" 3,825 sq. ft.

NORTH

MISCELLANEOUS NOTES:

1. F.E.C. - FIRE EXTINGUISHER AND CABINET
2. REFER A116, A117, A118 & A119 FOR FLOORING FINISH LAYOUT
3. PROVIDE BULLNOSE @ ALL EXPOSED CMU CORNERS & ENDS (b.n.)

DENOTES ROOM NAME
DORM ROOM
102
DENOTES ROOM NUMBER
102
DENOTES DOOR NUMBER

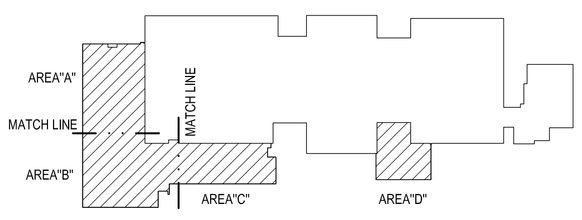

KEY PLAN

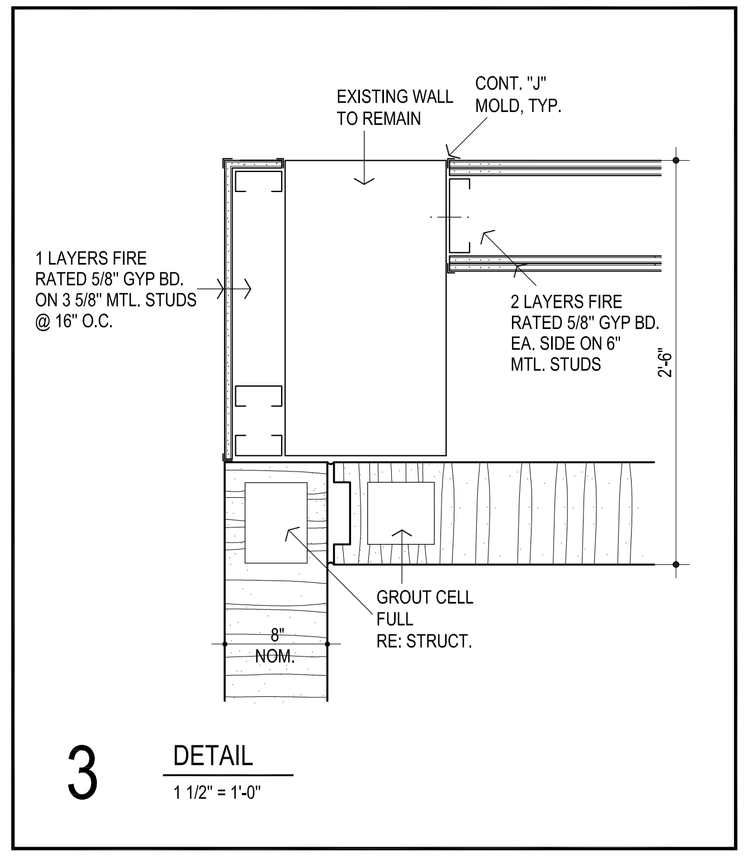

3 DETAIL

1 1/2" = 1'-0"

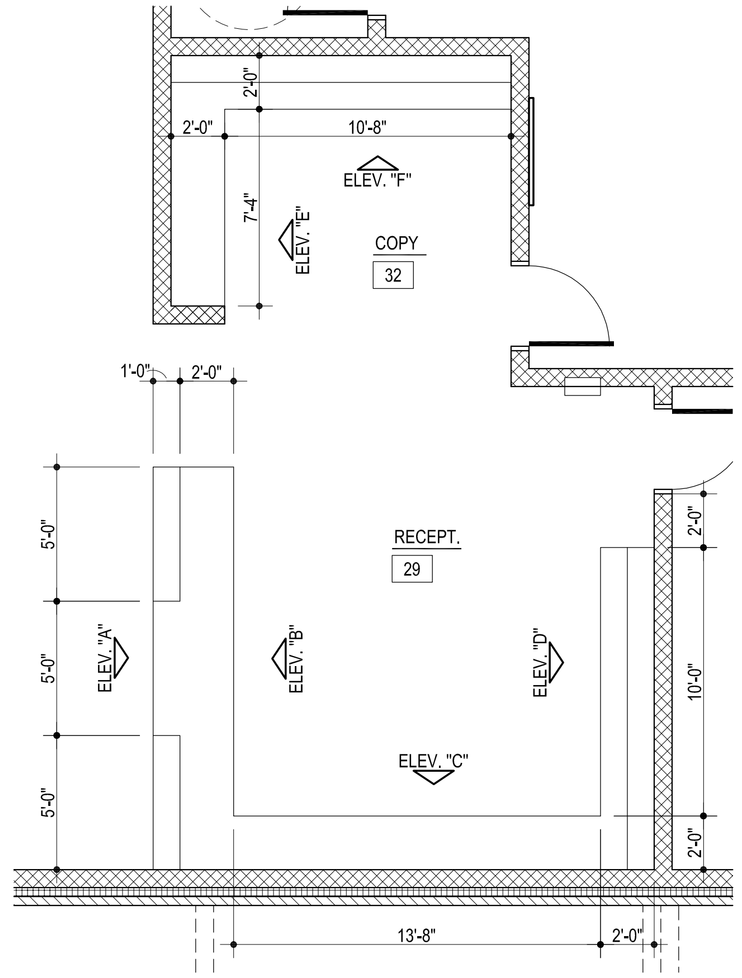

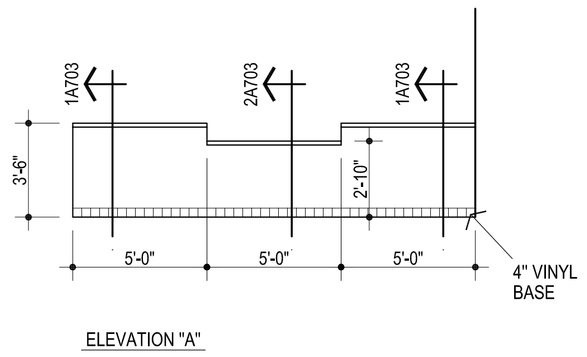

ELEVATION "A"

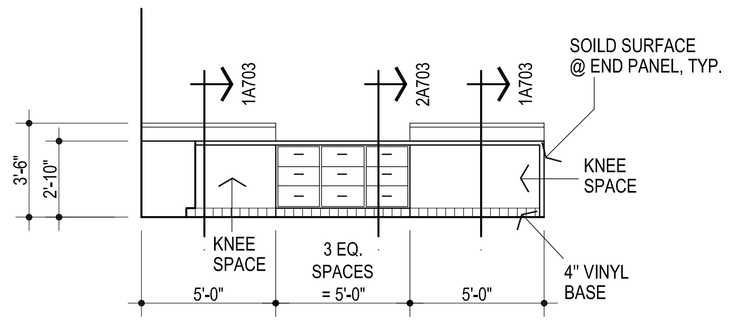

ELEVATION "B"

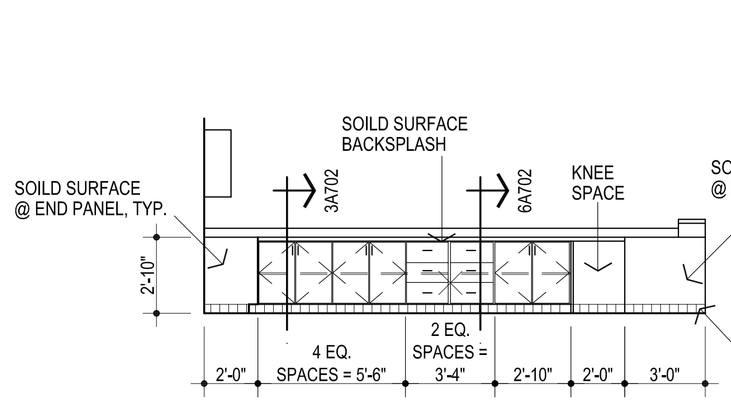

ELEVATION "C"

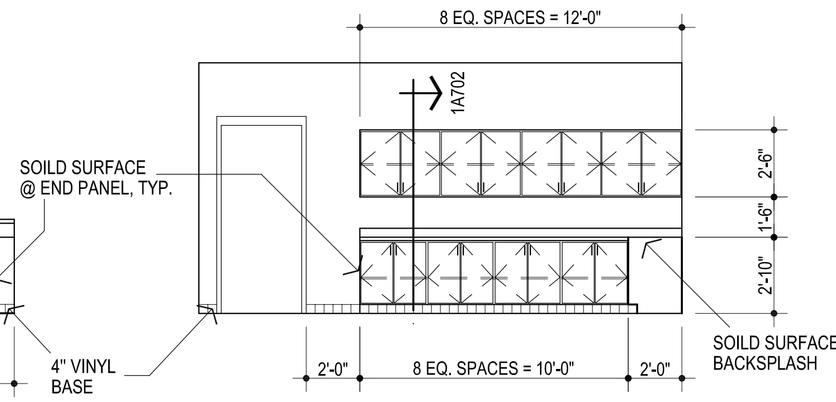

ELEVATION "D"

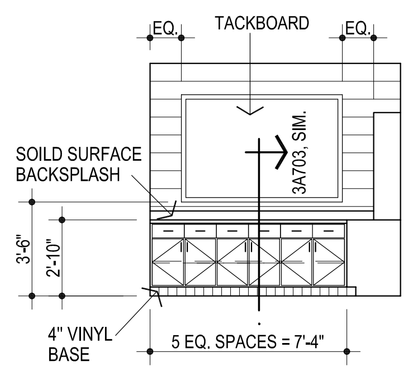

ELEVATION "E"

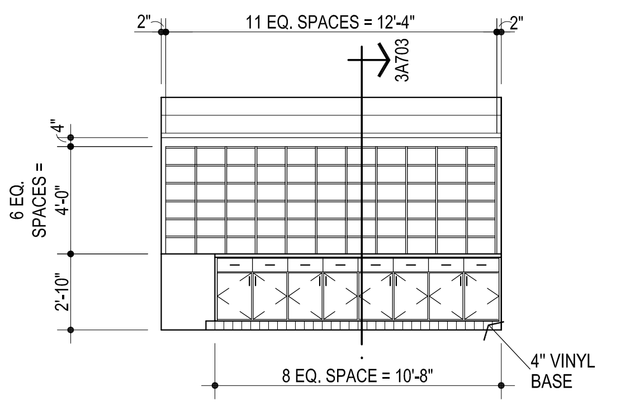

ELEVATION "F"

2 MILLWORK ROOM # 32

1/4" = 1'-0"

AGP
the Abla Griffin Partnership L.L.C.
201 N. BROADWAY
SUITE 210
MOORE, OK. 73160
405.735.3477
AGP@theAGP.net
www.theAGP.net

CEDAR CREEK
CIVIL

KFC ENGINEERING
STRUCTURAL

SALAS O'BRIEN
MECHANICAL / ELECTRICAL

STATE OF OKLAHOMA
MICHAEL L. ABLA
2639
OKLAHOMA CITY, OKLAHOMA
LICENSED ARCHITECT
7/31/23

CG
drawn by

MA
checked by

JULY 2023
date

revisions

MOORE PUBLIC SCHOOLS
BOARD OF EDUCATION
MOORE, OKLAHOMA

MOORE Public Schools
LEARNING FOR LIFE

CLASSROOM ADDITION
HIGHLAND WEST
JUNIOR HIGH SCHOOL

sheet no:

A106

OVERALL FLOOR PLAN

OWNERSHIP USE OF DOCUMENTS:

AGP EXPRESSLY RESERVES ITS COPYRIGHT AND OTHER PROPERTY RIGHTS OF ALL PLANS AND DRAWINGS DESIGNED AND/OR PRODUCED. PLANS AND DRAWINGS ARE NOT TO BE REPRODUCED IN ANY FORM OR MANNER WITHOUT THE EXPRESSED WRITTEN CONSENT OF AGP.

NORTH

1 EXTERIOR PLAN

1" = 20'-0"

DEMOLITION / UPGRADE NOTES:

EXTERIOR UPGRADE SYSTEM - THIN BRICK (1)

1. REMOVE EXISITNG UPPER METAL WALL PANELS & ROOF / EDGE FLASHING & PREPARE / REPAIR SUBSTRATE TO RECEIVE NEW WORK.
2. INSTALL NEW CONTINUOUS PREFINISHED METAL EDGE FLASHING. COLOR SHALL MATCH PREFINISHED WALL PANELS
3. PREPARE / REPAIR EXISTING CAST IN PLACE CONCRETE WALLS TO RECEIVE NEW THIN-BRICK VENEER SYSTEM. RE: ELEVATIONS.
4. CUT-OUT & REPLACE ALL JOINT SEALANTS & INSTALL NEW CONTINUOUS SEALANT & NEW CONTINUOUS BACKER ROD.

EXTERIOR UPGRADE SYSTEM - PAINT (2)

1. PREPARE / REPAIR EXISTING CASTIN PLACE CONCRETE WALLS / CMU TO RECEIVE NEW EXTERIOR PAINT / COATING SYSTEM.
2. CUT-OUT & REPLACE ALL JOINT SEALANTS & INSTALL NEW CONTINUOUS SEALANT & NEW CONTINUOUS BACKER ROD.
3. PREPARE / REPAIR EXISTING METAL WINDOWS & EXTERIOR H.M. DOORS & FRAMES TO RECEIVE NEW PAINTER'S FINISH. COLOR TO BE SHERWIN WILLIAMS - SW7055 ENDURING BRONZE
4. PREPARE / REPAIR EXISTING METAL WALL PANELS & COPING TO RECEIVE NEW EXTERIOR PAINT / COATING SYSTEM.

COLOR SCHEDULE

THIN BRICK COLORS :

COLOR : (30) COLOR : ACME BRICK - LIGHT / CREAM - MATCH EXISTING 2015 GYM

COLOR : (31) COLOR : ACME BRICK - DARK / RED - MATCH EXISTING 2015 GYM

PAINT COLORS :

COLOR : (7) SPLIT-FACE VENEER / TILT UP CONC. PANEL - SHERWIN WILLIAMS - MATCH VENEER COLOR (31) - TO BE SELECTED BY ARCHITECT

COLOR : (7a) EXISTING METAL WALL PANELS & COPING - SHERWIN WILLIAMS - SW7055 ENDURING BRONZE

MISC. COLORS:

COLOR : (4) EXISTING METAL LOUVERS - SHERWIN WILLIAMS - SW7055 ENDURING BRONZE

COLOR : (33) NEW PREFINISHED METAL EDGE FLASHING - MATCH PREFINISHED WALL PANELS

REFER ELEVATIONS FOR ADDITIONAL INFORMATION

AGP
the Abla Griffin Partnership L.L.C.

201 N. BROADWAY
SUITE 210
MOORE, OK. 73160
405.735.3477
AGP@theAGP.net
www.theAGP.net

CEDAR CREEK
CIVIL

KFC ENGINEERING
STRUCTURAL

SALAS O'BRIEN
MECHANICAL / ELECTRICAL

STATE OF OKLAHOMA · MICHAEL L. ABLA 2639 · OKLAHOMA CITY, OKLAHOMA · LICENSED ARCHITECT

7/31/23

CG
drawn by

MA
checked by

JULY 2023
date

revisions

MOORE PUBLIC SCHOOLS
BOARD OF EDUCATION
MOORE, OKLAHOMA

MOORE Public Schools
LEARNING FOR LIFE

CLASSROOM ADDITION
HIGHLAND WEST
JUNIOR HIGH SCHOOL

sheet no:

A107

EXTERIOR PLAN

OWNERSHIP USE OF DOCUMENTS:

AGP EXPRESSLY RESERVES ITS COPYRIGHT AND OTHER PROPERTY RIGHTS OF ALL PLANS AND DRAWINGS DESIGNED AND/OR PRODUCED. PLANS AND DRAWINGS ARE NOT TO BE REPRODUCED IN ANY FORM OR MANNER WITHOUT THE EXPRESSED WRITTEN CONSENT OF AGP.

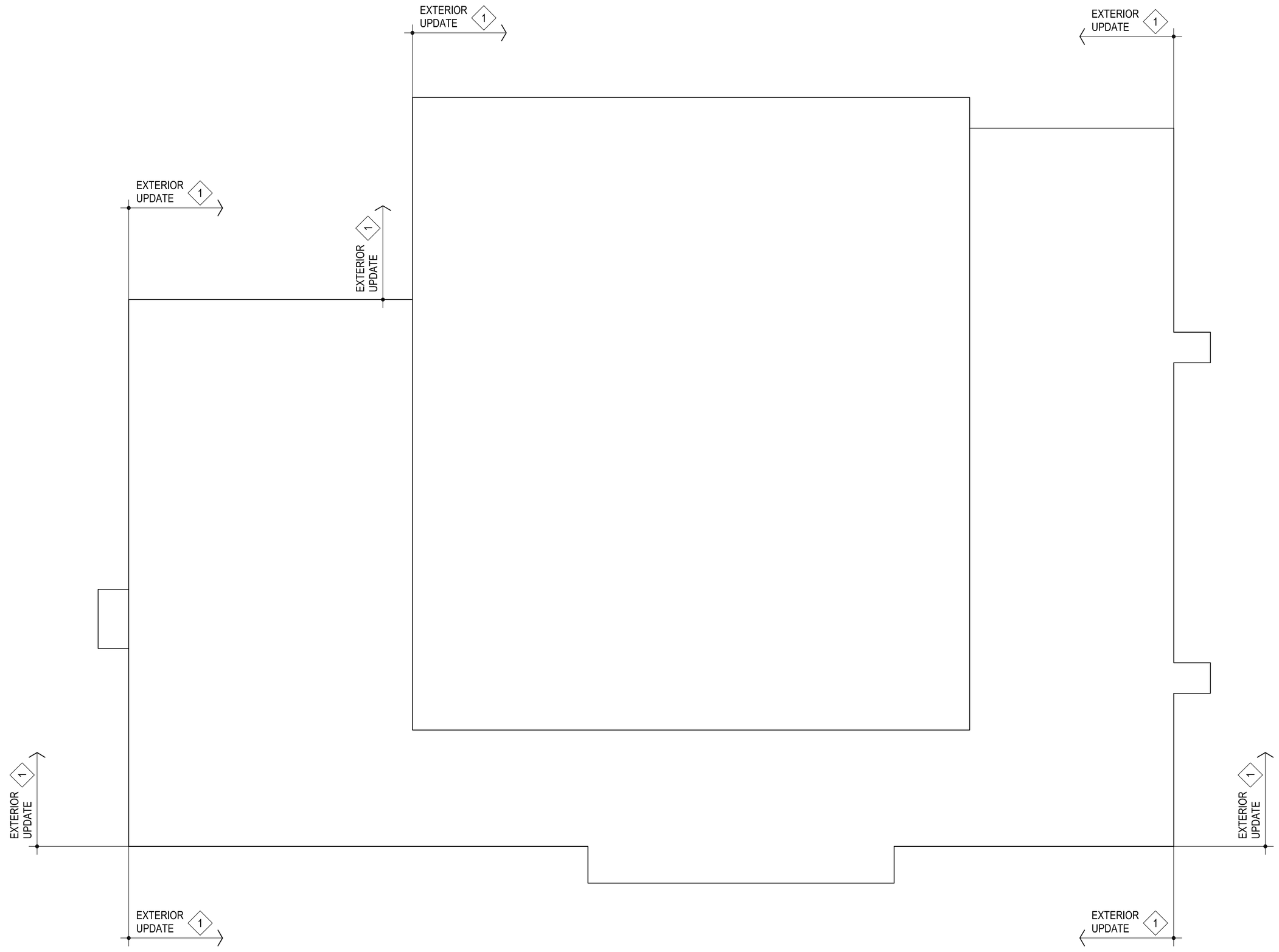

NORTH

1 EXTERIOR PLAN - GYM

3/32" = 1'-0"

DEMOLITION / UPGRADE NOTES:

EXISTING GYM - EXTERIOR UPGRADE SYSTEM (1)

1. PREPARE / REPAIR EXISTING CAST IN PLACE CONCRETE WALLS TO RECEIVE NEW EXTERIOR PAINT / COATING SYSTEM.
2. CUT-OUT & REPLACE ALL JOINT SEALANTS & INSTALL NEW CONTINUOUS SEALANT & NEW CONTINUOUS BACKER ROD.
3. PREPARE / REPAIR EXISTING METAL WINDOWS & EXTERIOR H.M. DOORS & FRAMES TO RECEIVE NEW PAINTER'S FINISH. COLOR TO BE SHERWIN WILLIAMS - SW7055 ENDURING BRONZE

EXISTING GYM - COLOR SCHEDULE

PAINT COLORS :

COLOR : (4) EXISTING H.M. DOORS & FRAMES & WINDOWS & MISC. METALS - SHERWIN WILLIAMS - SW7055 ENDURING BRONZE

COLOR : (7) SPLIT-FACE VENEER / TILT UP CONC. PANEL - SHERWIN WILLIAMS - MATCH VENNER COLOR (BY) - TO BE SELECTED BY ARCHITECT

COLOR : (7a) EXISTING METAL WALL PANELS & COPING - SHERWIN WILLIAMS - SW7055 ENDURING BRONZE

REFER ELEVATIONS FOR ADDITIONAL INFORMATION

ALTERNATE #1

AGP
the Abla Griffin Partnership L.L.C.
201 N. BROADWAY
SUITE 210
MOORE, OK. 73160
405.735.3477
AGP@theAGP.net
www.theAGP.net

CEDAR CREEK
CIVIL

KFC ENGINEERING
STRUCTURAL

SALAS O'BRIEN
MECHANICAL / ELECTRICAL

STATE OF OKLAHOMA
MICHAEL L. ABLA
2639
REGISTERED ARCHITECT
OKLAHOMA CITY, OKLAHOMA
7/31/23

CG
drawn by

MA
checked by

JULY 2023
date

revisions

MOORE PUBLIC SCHOOLS
BOARD OF EDUCATION
MOORE, OKLAHOMA

MOORE Public Schools
LEARNING FOR LIFE

CLASSROOM ADDITION
HIGHLAND WEST
JUNIOR HIGH SCHOOL

sheet no:

A108

EXTERIOR PLAN

OWNERSHIP USE OF DOCUMENTS:

AGP EXPRESSLY RESERVES ITS COPYRIGHT AND OTHER PROPERTY RIGHTS OF ALL PLANS AND DRAWINGS DESIGNED AND/OR PRODUCED. PLANS AND DRAWINGS ARE NOT TO BE REPRODUCED IN ANY FORM OR MANNER WITHOUT THE EXPRESSED WRITTEN CONSENT OF AGP.

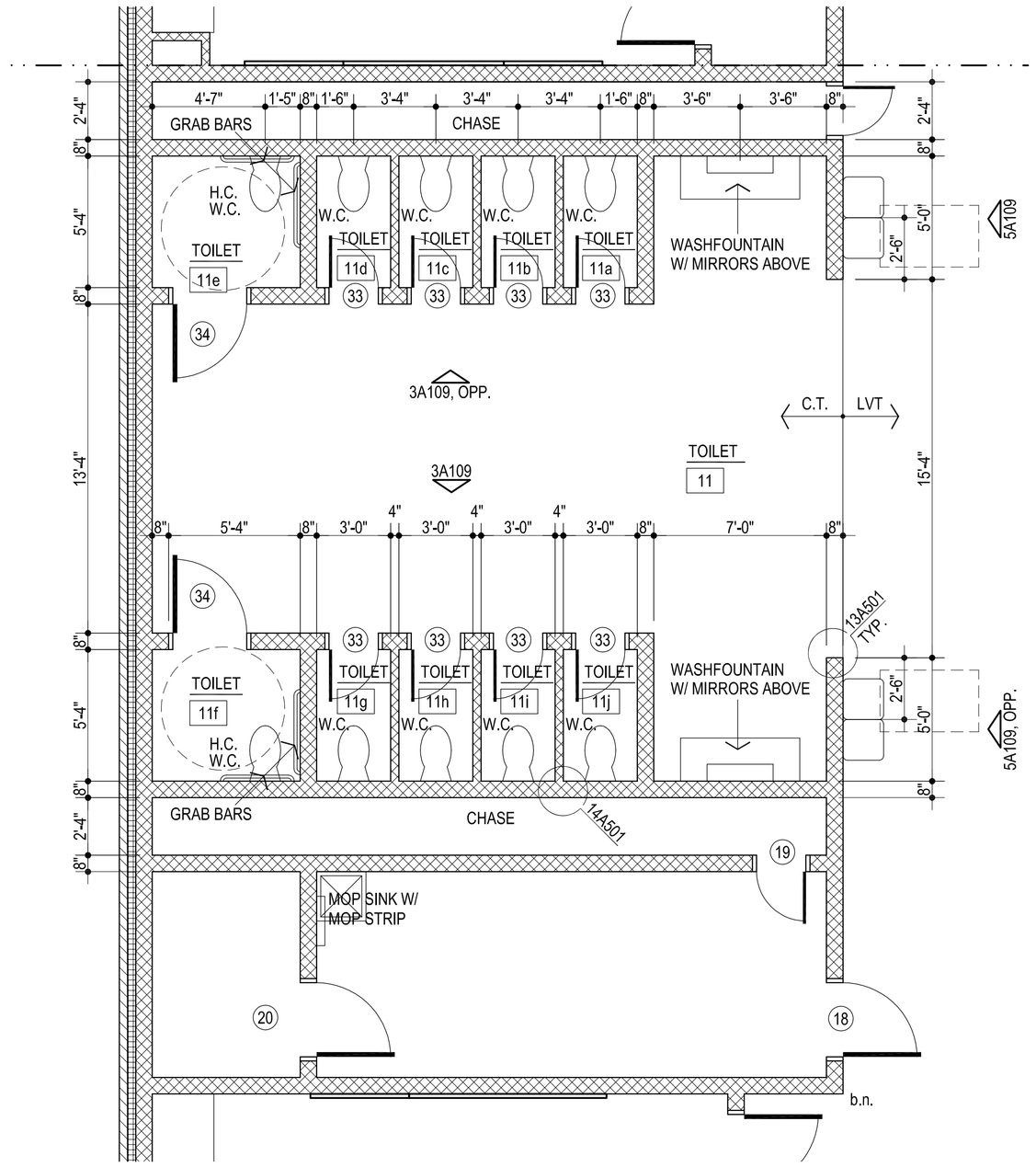

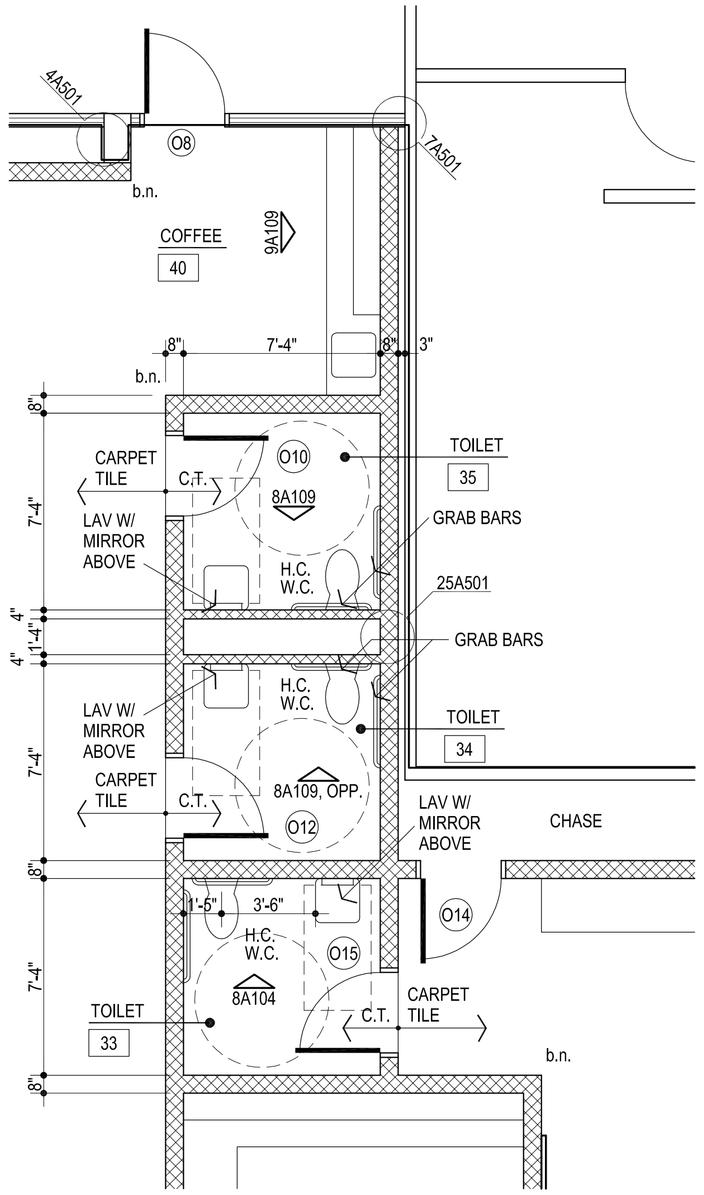

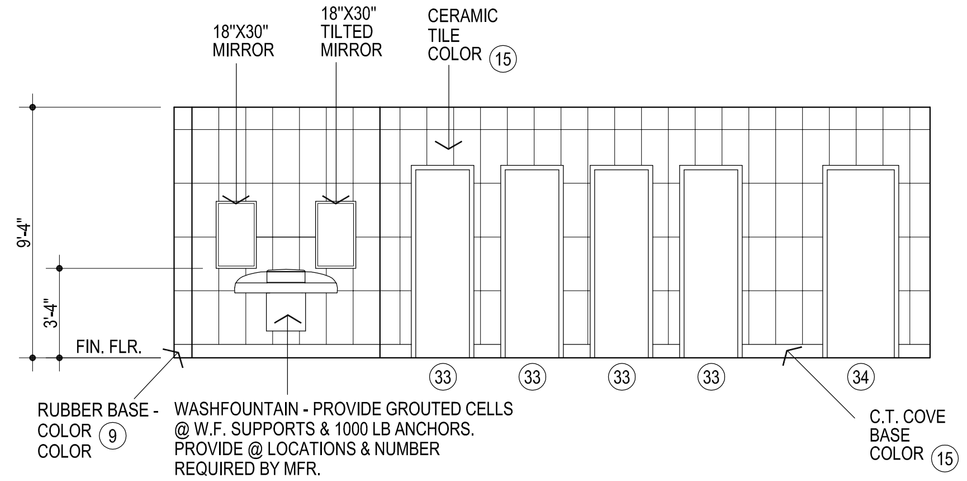

3 E. WALL - RM. #11, W. WALL OPP. - RM. #11

1/4" = 1'-0"

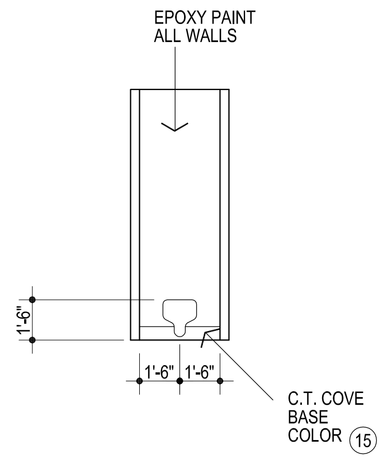

4 TYP. TOILET

1/4" = 1'-0"

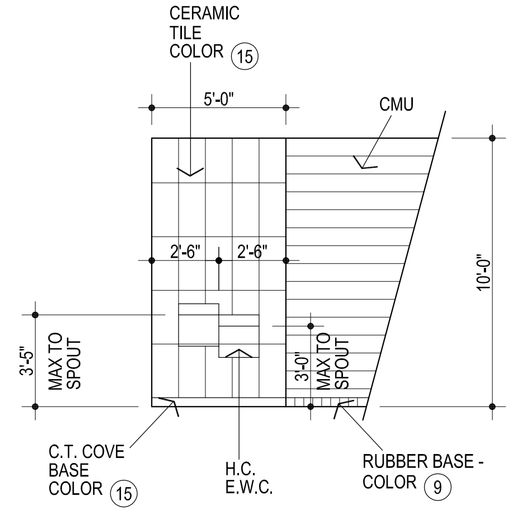

5 TYP. E.W.C. ELEVATION

1/4" = 1'-0"

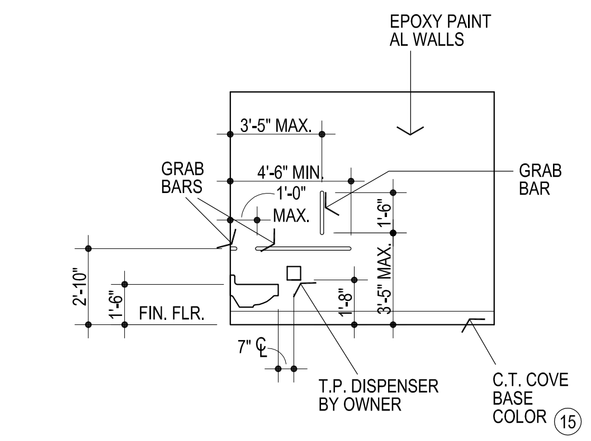

7 HANDICAP ACCESSIBLE W.C.

1/4" = 1'-0"

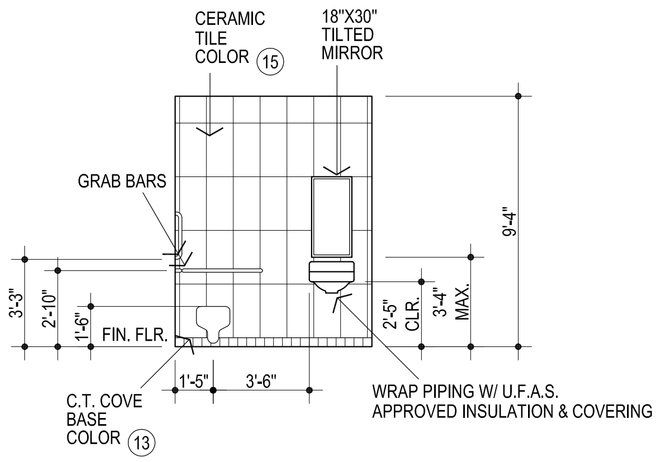

8 W. WALL ROOM # 33
W. WALL ROOM # 34
E. WALL ROOM # 35

1/4" = 1'-0"

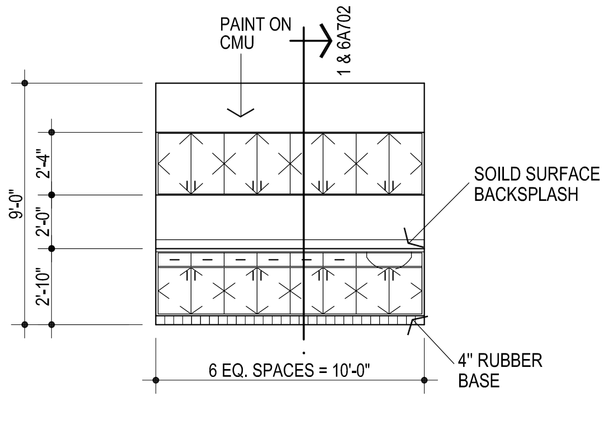

9 N. WALL ROOM # 40

1/4" = 1'-0"

NOTE: CONTRACTOR TO VERIFY THAT THE MOUNTING HEIGHTS OF ALL WALL MOUNTED FIXTURES (I.E. PLUMBING FIXTURES, GRAB BARS, MIRRORS, ETC.) MEET ALL APPLICABLE CODES & STANDARDS PRIOR TO INSTALLATION.

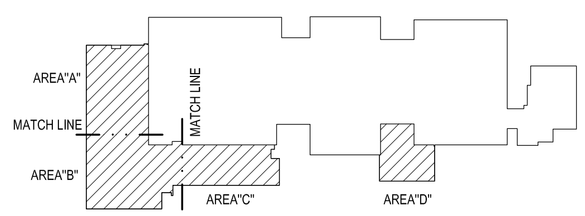

KEY PLAN

NORTH

1 ENLARGED FLOOR PLAN ROOM # 11, 11a, 11b, 11c, 11d, 11e, 11f, 11g, 11h, 11j, & 11k

1/4" = 1'-0"

NORTH

2 ENLARGED FLOOR PLAN ROOM #33, 34, 35 & 40

1/4" = 1'-0"

AGP
the Abla Griffin Partnership L.L.C.
201 N. BROADWAY
SUITE 210
MOORE, OK. 73160
405.735.3477
AGP@theAGP.net
www.theAGP.net

CEDAR CREEK
CIVIL

KFC ENGINEERING
STRUCTURAL

SALAS O'BRIEN
MECHANICAL / ELECTRICAL

STATE OF OKLAHOMA
MICHAEL L. ABLA
2639
REGISTERED ARCHITECT
7/31/23

CG
drawn by

MA
checked by

JULY 2023
date

revisions

MOORE PUBLIC SCHOOLS
BOARD OF EDUCATION
MOORE, OKLAHOMA

MOORE Public Schools
LEARNING FOR LIFE

CLASSROOM ADDITION
HIGHLAND WEST
JUNIOR HIGH SCHOOL

sheet no:

A109

ENLARGED FLOOR PLAN

OWNERSHIP USE OF DOCUMENTS:

AGP EXPRESSLY RESERVES ITS COPYRIGHT AND OTHER PROPERTY RIGHTS OF ALL PLANS AND DRAWINGS DESIGNED AND/OR PRODUCED. PLANS AND DRAWINGS ARE NOT TO BE REPRODUCED IN ANY FORM OR MANNER WITHOUT THE EXPRESSED WRITTEN CONSENT OF AGP.

NORTH

1 REFLECTED CEILING PLAN - AREA "A"

1/8" = 1'-0"

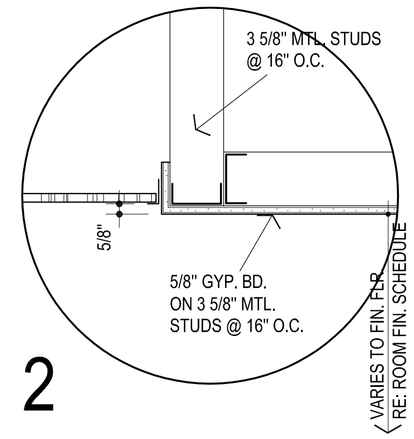

2

LEGEND:

- MECHANICAL OPENINGS
- ELECTRICAL FIXTURES
- CEILING MOUNTED SMOKE DETECTOR, RE: ELEC

NOTES:

1. REFER MECHANICAL & ELECTRICAL FOR ANY ADDITIONAL CEILING MOUNTED FIXTURES
2. REFER TO SHEET A100 FOR LOCATIONS OF FIRE-RATED WALLS

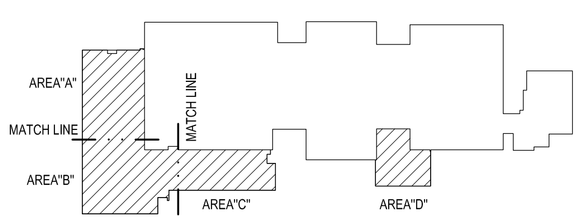

KEY PLAN

AGP
the Abla Griffin Partnership L.L.C.
201 N. BROADWAY
SUITE 210
MOORE, OK. 73160
405.735.3477
AGP@theAGP.net
www.theAGP.net

CEDAR CREEK
CIVIL

KFC ENGINEERING
STRUCTURAL

SALAS O'BRIEN
MECHANICAL / ELECTRICAL

STATE OF OKLAHOMA
MICHAEL L. ABLA 2639
REGISTERED ARCHITECT
OKLAHOMA CITY, OKLAHOMA
7/31/23

CG
drawn by

MA
checked by

JULY 2023
date

revisions

MOORE PUBLIC SCHOOLS
BOARD OF EDUCATION
MOORE, OKLAHOMA

MOORE Public Schools
LEARNING FOR LIFE

CLASSROOM ADDITION
HIGHLAND WEST
JUNIOR HIGH SCHOOL

sheet no:

A110

OVERALL FLOOR PLAN

OWNERSHIP USE OF DOCUMENTS:

AGP EXPRESSLY RESERVES ITS COPYRIGHT AND OTHER PROPERTY RIGHTS OF ALL PLANS AND DRAWINGS DESIGNED AND/OR PRODUCED. PLANS AND DRAWINGS ARE NOT TO BE REPRODUCED IN ANY FORM OR MANNER WITHOUT THE EXPRESSED WRITTEN CONSENT OF AGP.

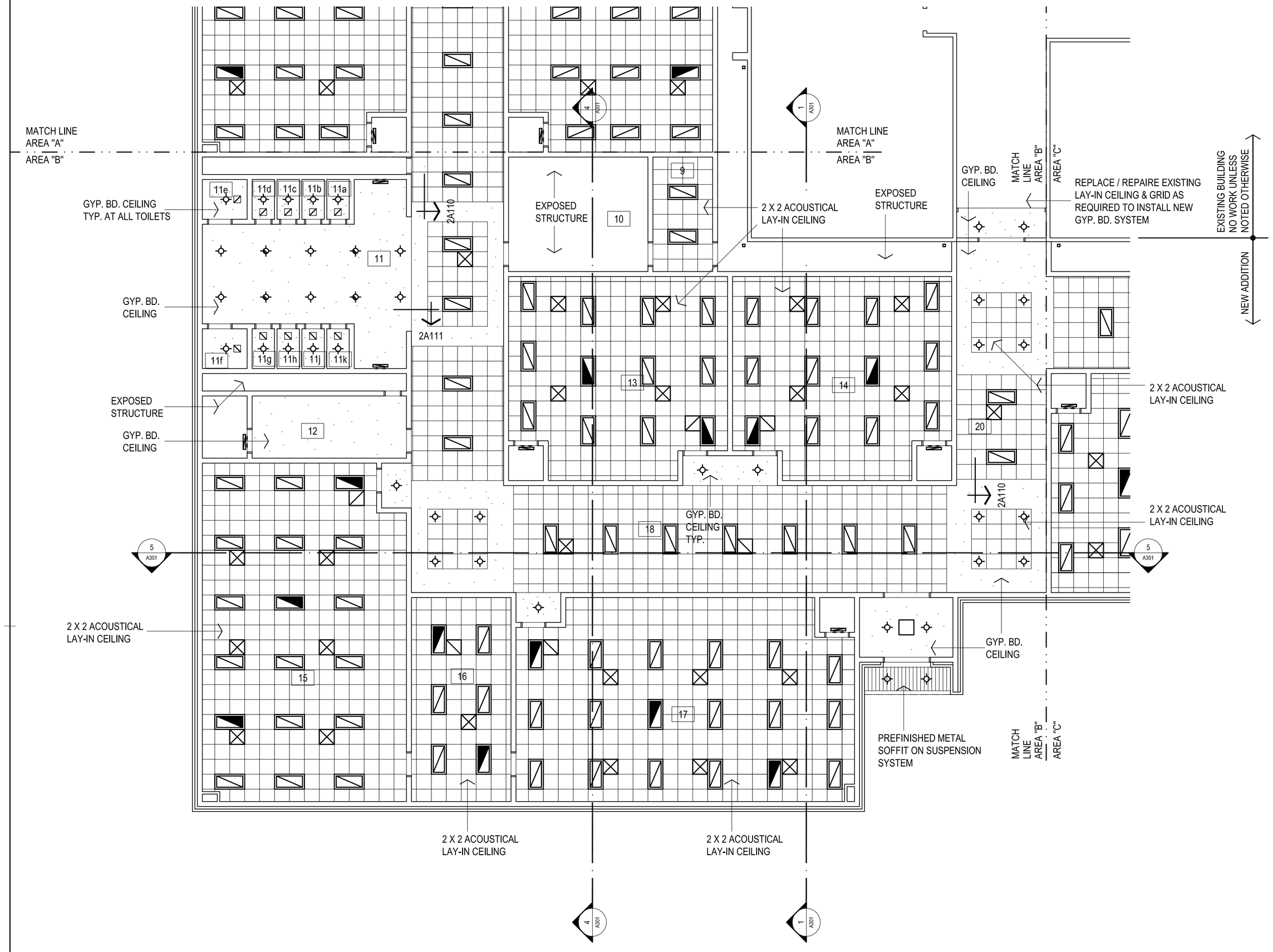

NORTH

1 REFLECTED CEILING PLAN - AREA "B"

1/8" = 1'-0"

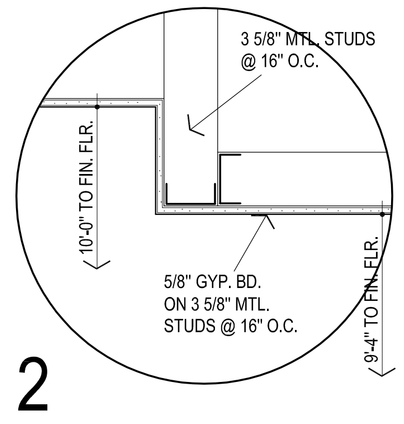

2

LEGEND:

- MECHANICAL OPENINGS
- ELECTRICAL FIXTURES
- CEILING MOUNTED SMOKE DETECTOR, RE: ELEC

NOTES:

1. REFER MECHANICAL & ELECTRICAL FOR ANY ADDITIONAL CEILING MOUNTED FIXTURES
2. REFER TO SHEET A100 FOR LOCATIONS OF FIRE-RATED WALLS

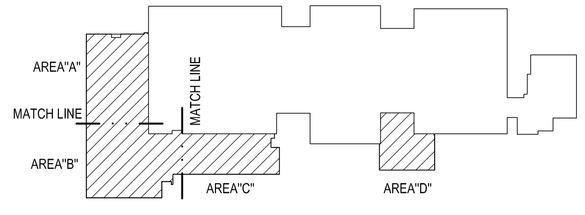

KEY PLAN

AGP
the Abla Griffin Partnership L.L.C.
201 N. BROADWAY
SUITE 210
MOORE, OK. 73160
405.735.3477
AGP@theAGP.net
www.theAGP.net

CEDAR CREEK
CIVIL

KFC ENGINEERING
STRUCTURAL

SALAS O'BRIEN
MECHANICAL / ELECTRICAL

STATE OF OKLAHOMA
MICHAEL L. ABLA
2639
REGISTERED ARCHITECT
7/31/23

CG
drawn by

MA
checked by

JULY 2023
date

revisions

MOORE PUBLIC SCHOOLS
BOARD OF EDUCATION
MOORE, OKLAHOMA

MOORE Public Schools
LEARNING FOR LIFE

CLASSROOM ADDITION
HIGHLAND WEST
JUNIOR HIGH SCHOOL

sheet no:

A111

OVERALL FLOOR PLAN

OWNERSHIP USE OF DOCUMENTS:

AGP EXPRESSLY RESERVES ITS COPYRIGHT AND OTHER PROPERTY RIGHTS OF ALL PLANS AND DRAWINGS DESIGNED AND/OR PRODUCED. PLANS AND DRAWINGS ARE NOT TO BE REPRODUCED IN ANY FORM OR MANNER WITHOUT THE EXPRESSED WRITTEN CONSENT OF AGP.

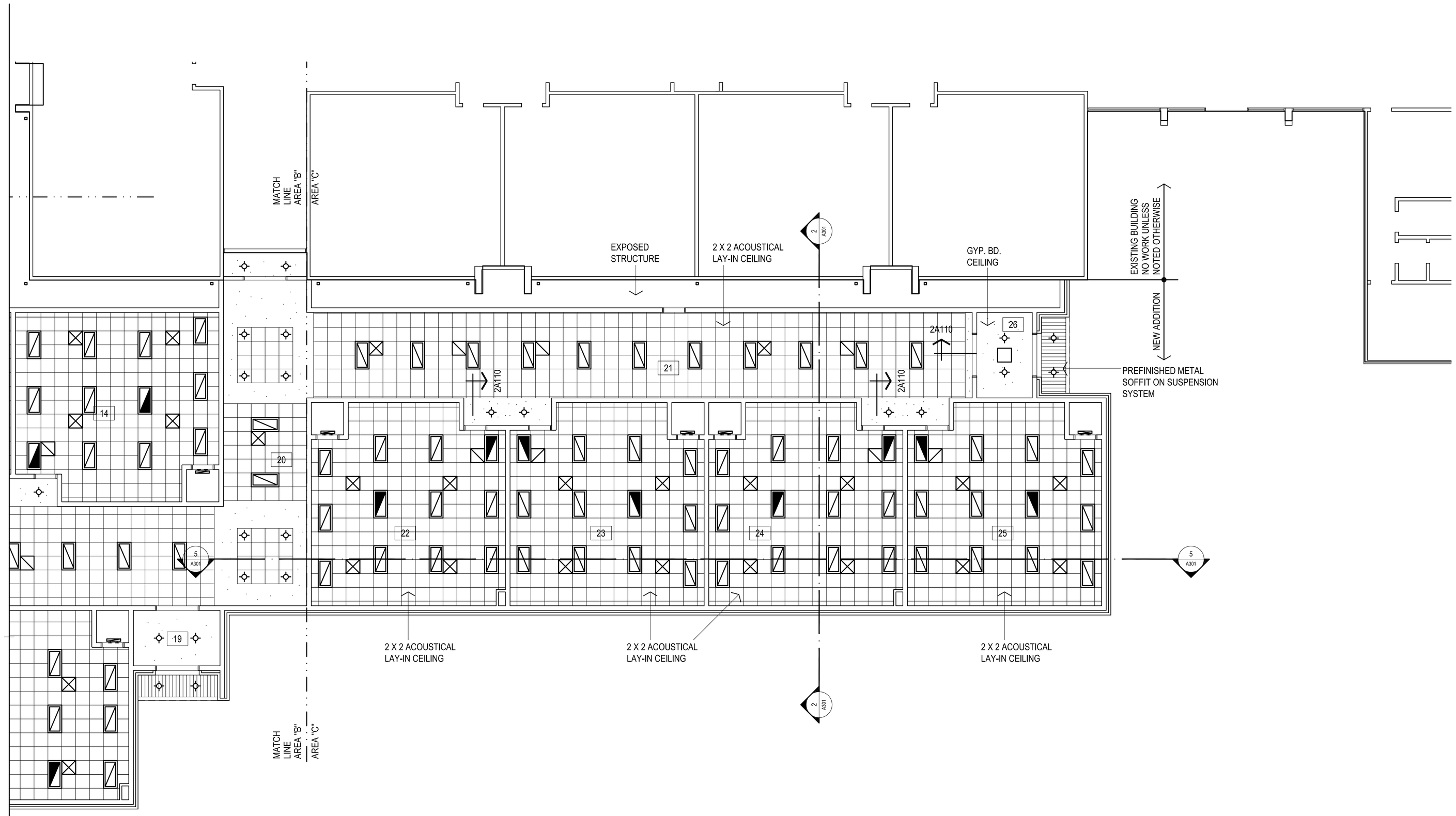

1 FLOOR PLAN - AREA "C"

1/8" = 1'-0"

NORTH

MISCELLANEOUS NOTES:

1. F.E.C. - FIRE EXTINGUISHER AND CABINET
2. REFER A116, A117 & A118 FOR FLOORING FINISH LAYOUT
3. * INDICATES ROOM WALLS & RECESS WALLS PAINTED ACCENT COLOR

DENOTES ROOM NAME

DORM ROOM

102

DENOTES ROOM NUMBER

102

DENOTES DOOR NUMBER

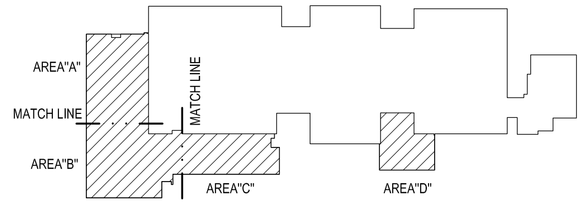

KEY PLAN

AGP
the Abla Griffin Partnership L.L.C.
201 N. BROADWAY
SUITE 210
MOORE, OK. 73160
405.735.3477
AGP@theAGP.net
www.theAGP.net

CEDAR CREEK
CIVIL

KFC ENGINEERING
STRUCTURAL

SALAS O'BRIEN
MECHANICAL / ELECTRICAL

STATE OF OKLAHOMA
MICHAEL L. ABLA
2639
REGISTERED ARCHITECT
OKLAHOMA CITY, OKLAHOMA

7/31/23

CG
drawn by

MA
checked by

JULY 2023
date

revisions

MOORE PUBLIC SCHOOLS
BOARD OF EDUCATION
MOORE, OKLAHOMA

MOORE Public Schools
LEARNING FOR LIFE

CLASSROOM ADDITION
HIGHLAND WEST
JUNIOR HIGH SCHOOL

sheet no:

A112

OVERALL FLOOR PLAN

OWNERSHIP USE OF DOCUMENTS:

AGP EXPRESSLY RESERVES ITS COPYRIGHT AND OTHER PROPERTY RIGHTS OF ALL PLANS AND DRAWINGS DESIGNED AND/OR PRODUCED. PLANS AND DRAWINGS ARE NOT TO BE REPRODUCED IN ANY FORM OR MANNER WITHOUT THE EXPRESSED WRITTEN CONSENT OF AGP.

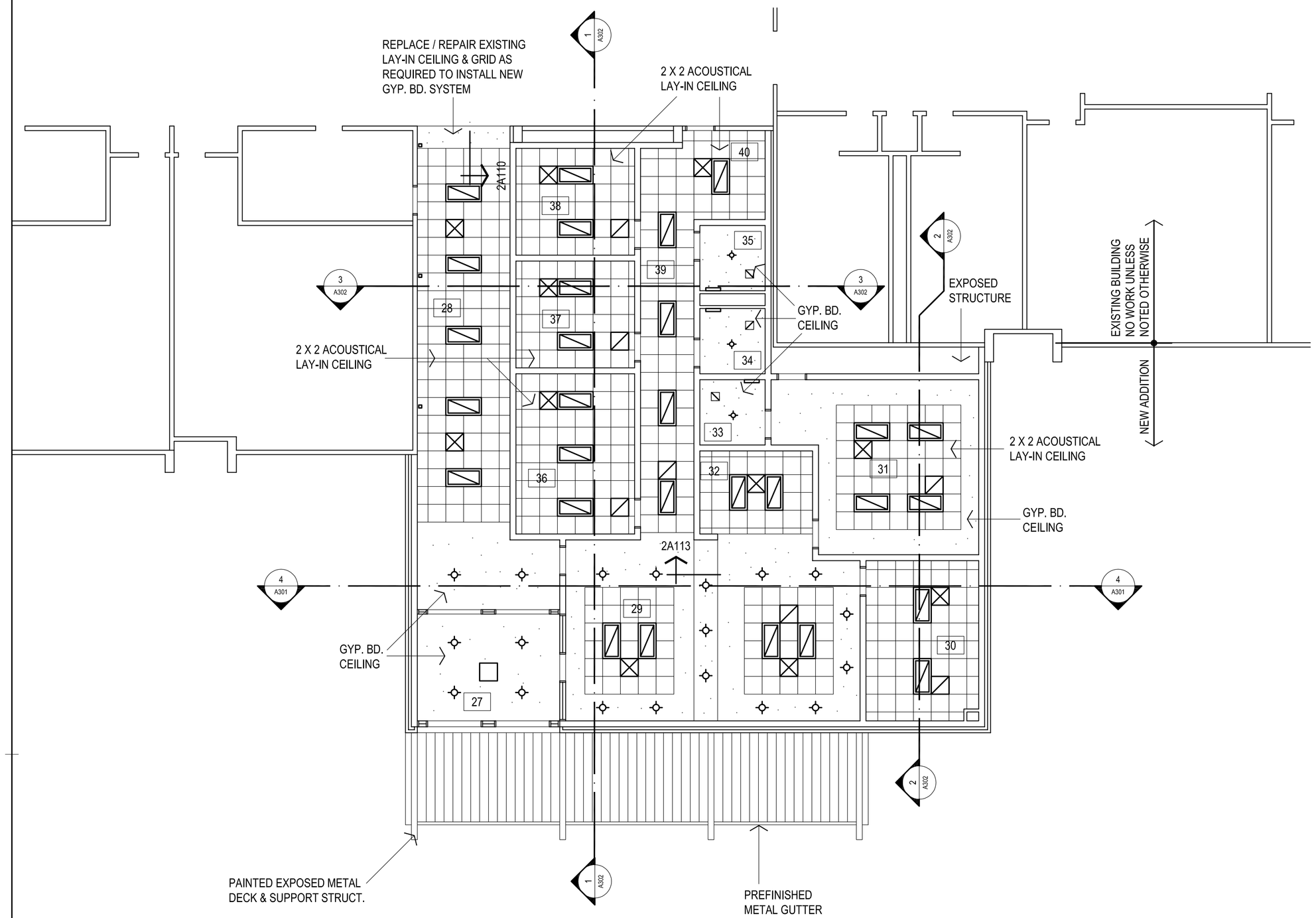

1 REFLECTED CEILING PLAN - AREA "D"

1/8" = 1'-0"

NORTH

LEGEND:

- MECHANICAL OPENINGS
- ELECTRICAL FIXTURES
- CEILING MOUNTED SMOKE DETECTOR, RE: ELEC

NOTES:

1. REFER MECHANICAL & ELECTRICAL FOR ANY ADDITIONAL CEILING MOUNTED FIXTURES
2. REFER TO SHEET A100 FOR LOCATIONS OF FIRE-RATED WALLS
3. EXISTING SOFFIT TO REMAIN PROVIDE NEW SOFFIT MATERIALS, TRIM, ETC FOR COMPLETE INSTALLATION. SALVAGE EXISTING SOFFIT TO BE REMOVED AS PRACTICAL FOR REUSE.

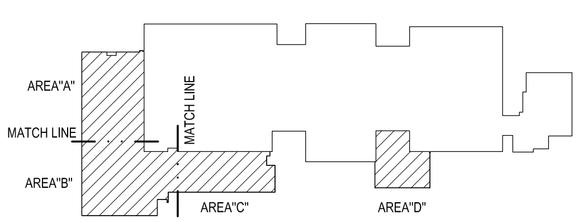

KEY PLAN

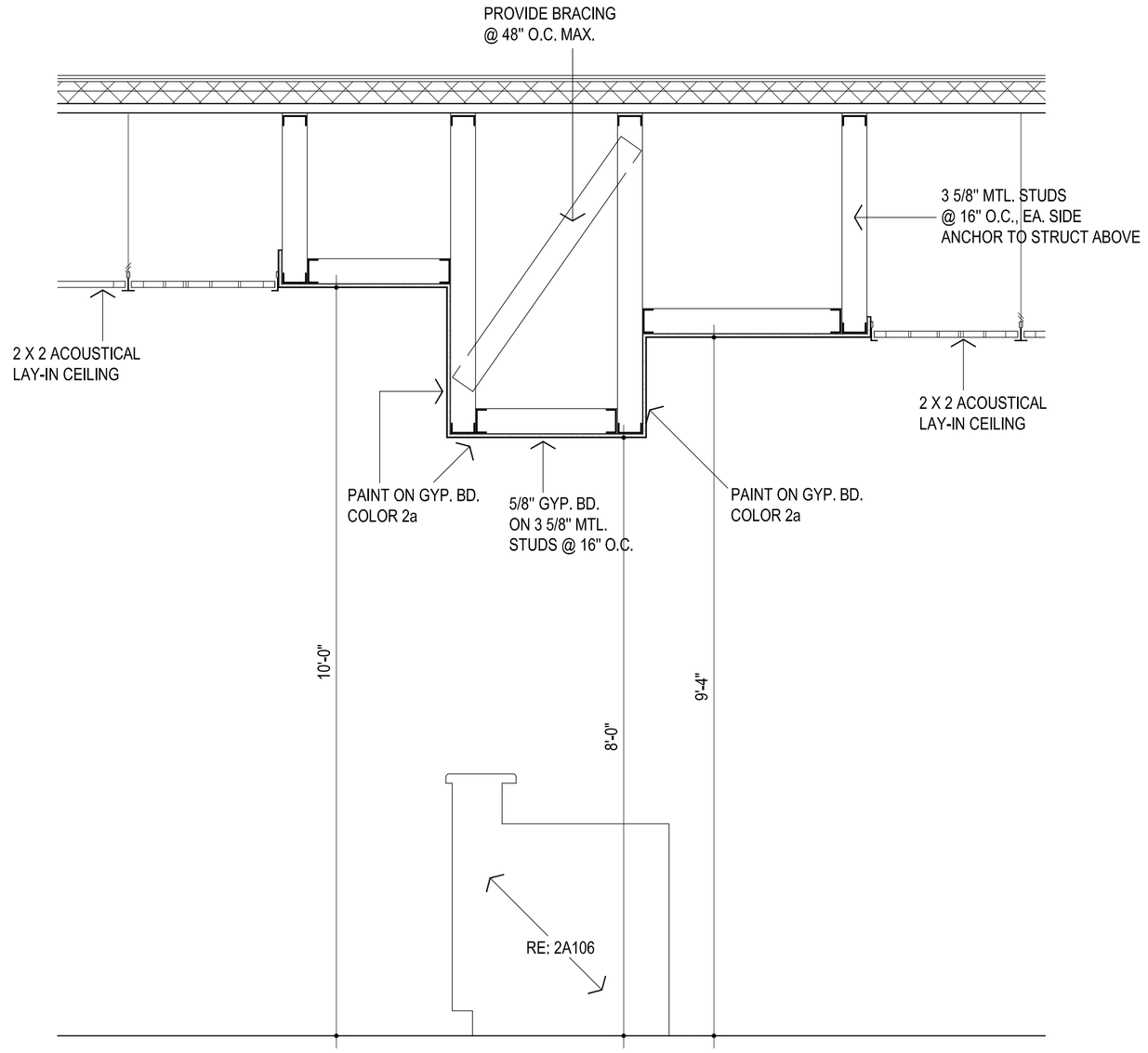

2 SECTION

3/4" = 1'-0"

AGP
the Abla Griffin Partnership L.L.C.
201 N. BROADWAY
SUITE 210
MOORE, OK. 73160
405.735.3477
AGP@theAGP.net
www.theAGP.net

CEDAR CREEK
CIVIL

KFC ENGINEERING
STRUCTURAL

SALAS O'BRIEN
MECHANICAL / ELECTRICAL

STATE OF OKLAHOMA
MICHAEL L. ABLA 2639
REGISTERED ARCHITECT
7/31/23

CG
drawn by

MA
checked by

JULY 2023
date

revisions

MOORE PUBLIC SCHOOLS
BOARD OF EDUCATION
MOORE, OKLAHOMA

MOORE Public Schools
LEARNING FOR LIFE

CLASSROOM ADDITION
HIGHLAND WEST
JUNIOR HIGH SCHOOL

sheet no:

A113

OVERALL FLOOR PLAN

OWNERSHIP USE OF DOCUMENTS:

AGP EXPRESSLY RESERVES ITS COPYRIGHT AND OTHER PROPERTY RIGHTS OF ALL PLANS AND DRAWINGS DESIGNED AND/OR PRODUCED. PLANS AND DRAWINGS ARE NOT TO BE REPRODUCED IN ANY FORM OR MANNER WITHOUT THE EXPRESSED WRITTEN CONSENT OF AGP.

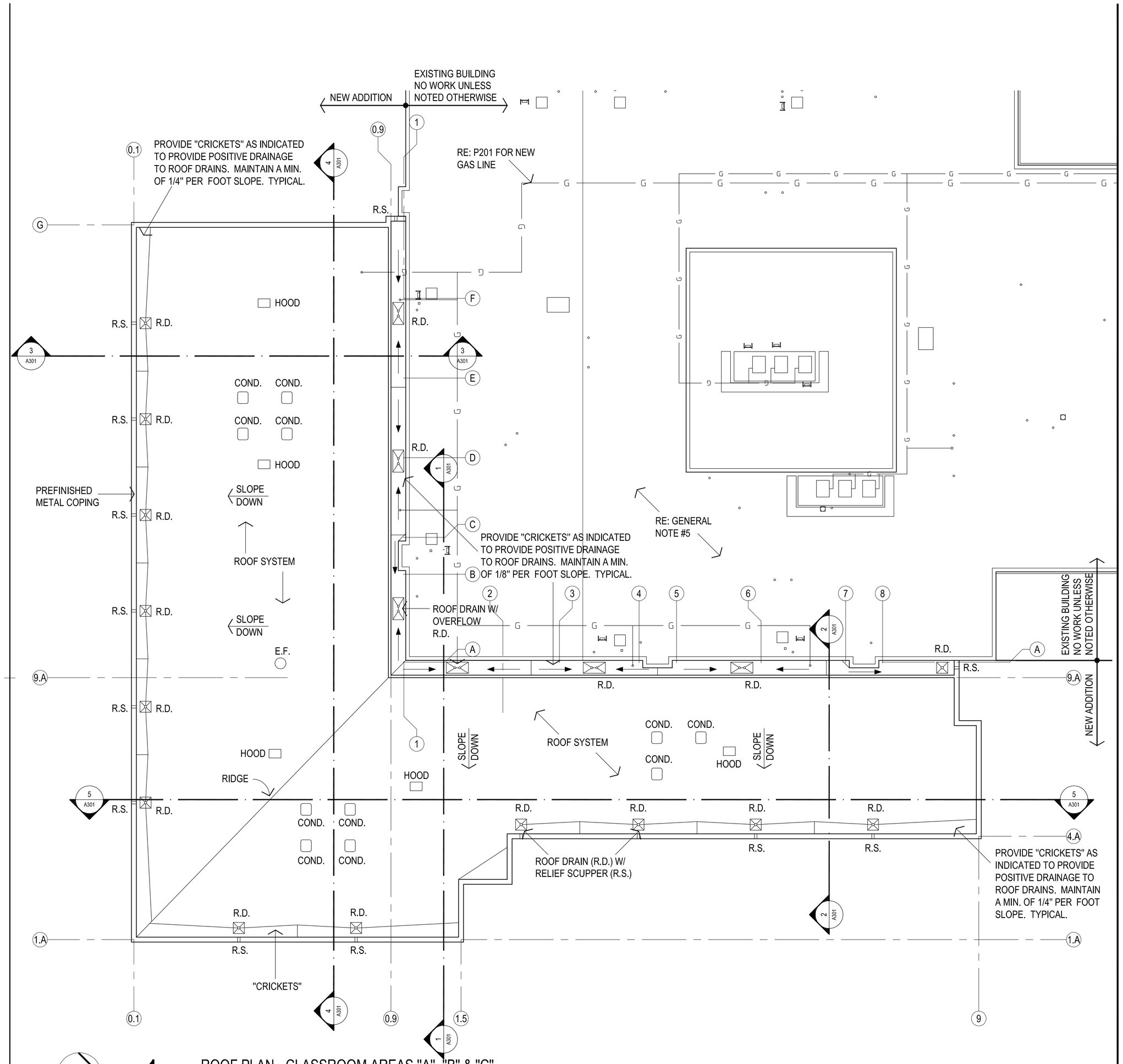

NORTH

1 ROOF PLAN - CLASSROOM AREAS "A", "B" & "C"

1/16" = 1'-0"

NOTES:

1. RE: MECH & ELEC. FOR ADDITIONAL ROOF MOUNTED ITEMS. CONTRACTOR TO COORDINATE ALL ROOF MOUNTED ITEMS & PENETRATIONS W/ APPLICABLE TRADES
2. CONTRACTOR TO COORDINATE ROOF VENT PENETRATIONS W/ ARCHITECT.
3. INDICATES NEW WALKWAY PAD LOCATIONS - CUT PADS INTO 5'-0" MAX LENGTHS & PLACE 2" APART TO COVER AREAS INDICATED.
4. PROVIDE @ ALL ROOF PENETRATIONS - PENETRATION DAM / SEALER POCKETS AS PER 6A115
5. PROVIDE NEW "CRICKET" AT EXISTING ROOF SYTEM TO PROVIDE POSITIVE DRAINAGE TO ROOF EDGE / NEW SCUPPER. MAINTAIN A MIN. OF 1/8" PER FOOT SLOPE PROVIDE NEW WOOD BLOCKING, EDGE METAL, ETC. FOR A COMPLETE INSTALLATION . MODIFY EXISTING ROOF SYSTEM AS REQUIRED TO INSTALL NEW OVERLAY AND TAPERED INSULATION TO PROVIDE POSTIVE DRAINAGE TO NEW SCUPPER COORDINATE W/ ARCHITECT

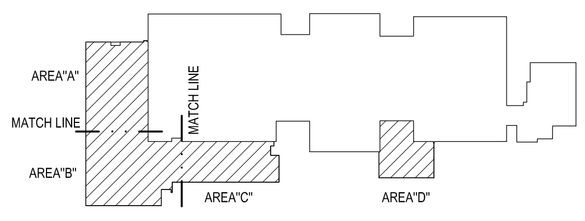

KEY PLAN

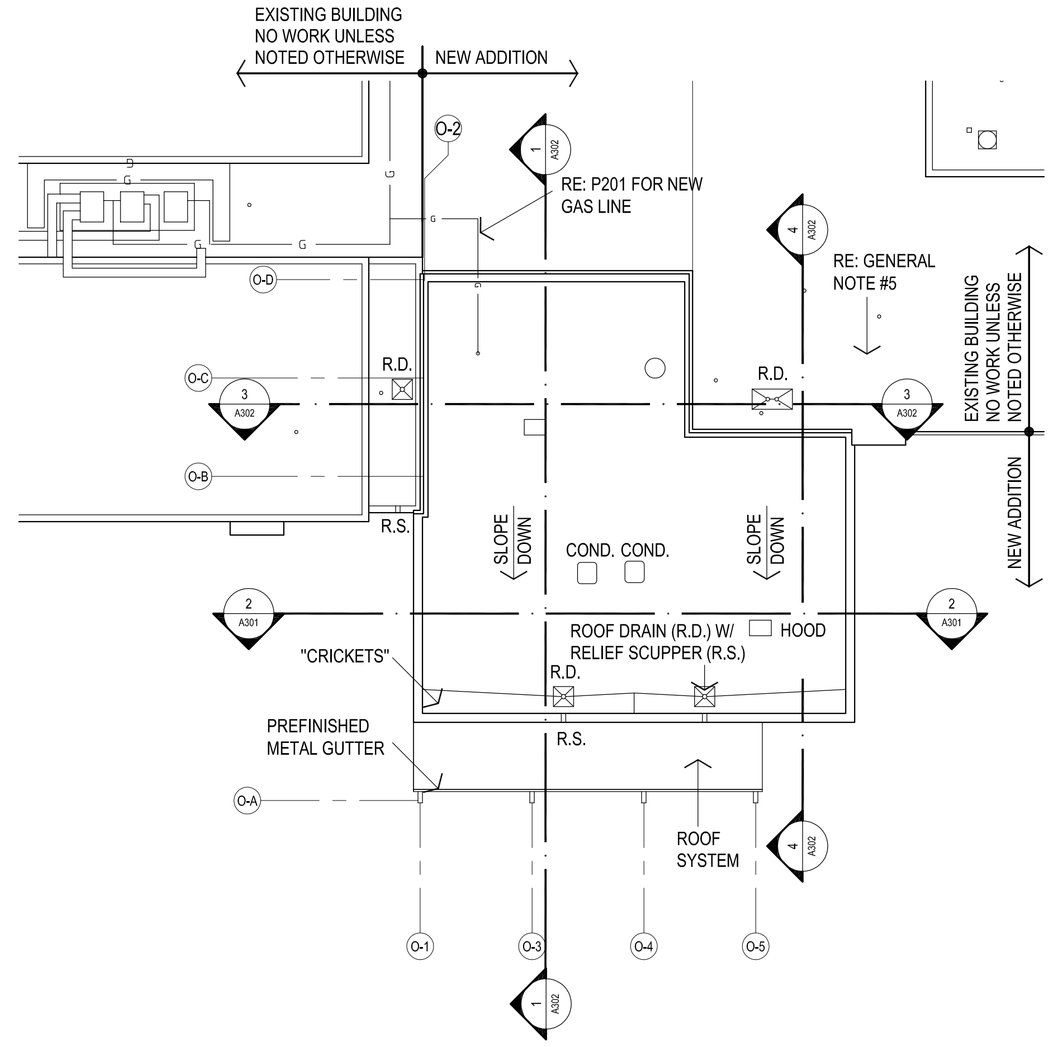

NORTH

2 ROOF PLAN - OFFICE AREA "D"

1/16" = 1'-0"

AGP
the Abla Griffin Partnership L.L.C.
201 N. BROADWAY
SUITE 210
MOORE, OK. 73160
405.735.3477
AGP@theAGP.net
www.theAGP.net

CEDAR CREEK
CIVIL

KFC ENGINEERING
STRUCTURAL

SALAS O'BRIEN
MECHANICAL / ELECTRICAL

STATE OF OKLAHOMA
MICHAEL L. ABLA 2639
REGISTERED ARCHITECT
7/31/23

CG
drawn by

MA
checked by

JULY 2023
date

revisions

MOORE PUBLIC SCHOOLS
BOARD OF EDUCATION
MOORE, OKLAHOMA

MOORE Public Schools
LEARNING FOR LIFE

CLASSROOM ADDITION
HIGHLAND WEST
JUNIOR HIGH SCHOOL

sheet no:

A114

ROOF PLAN

OWNERSHIP USE OF DOCUMENTS:

AGP EXPRESSLY RESERVES ITS COPYRIGHT AND OTHER PROPERTY RIGHTS OF ALL PLANS AND DRAWINGS DESIGNED AND/OR PRODUCED. PLANS AND DRAWINGS ARE NOT TO BE REPRODUCED IN ANY FORM OR MANNER WITHOUT THE EXPRESSED WRITTEN CONSENT OF AGP.

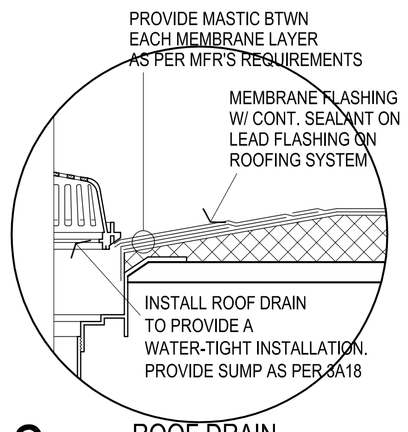

2 ROOF DRAIN
NO SCALE

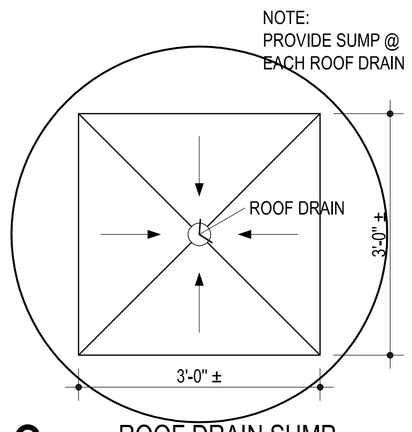

3 ROOF DRAIN SUMP
NO SCALE

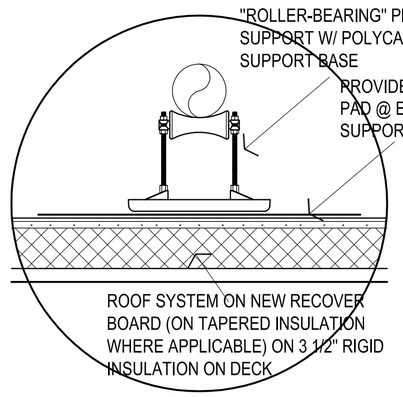

4 ADJUSTABLE PIPE SUPPORTS - FRONT VIEW
NO SCALE

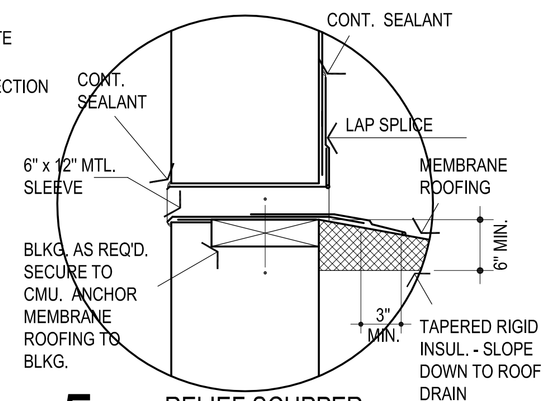

5 RELIEF SCUPPER
NOT TO SCALE

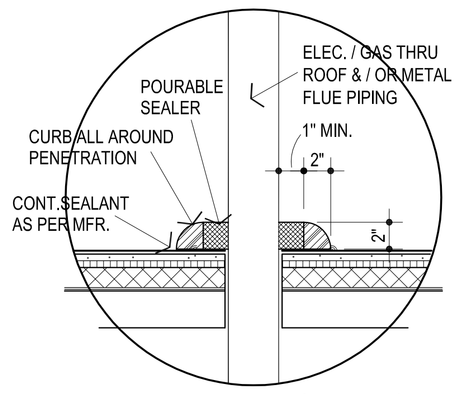

6 PENETRATION DAM / SEALER POCKET @ MAJOR PENETRATIONS

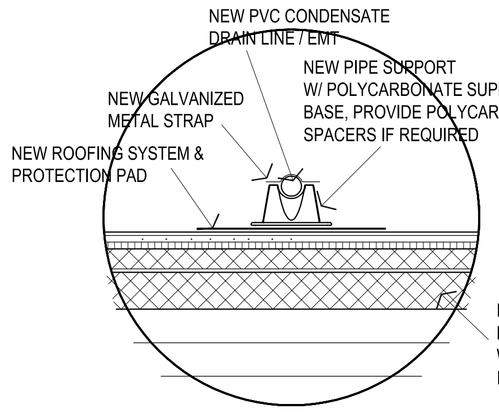

7 DETAIL @ PVC / EMT SUPPORT
NO SCALE

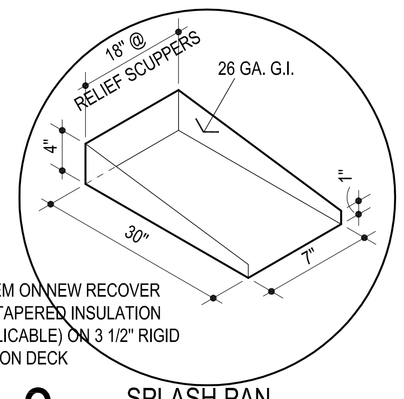

8 SPLASH PAN
NO SCALE

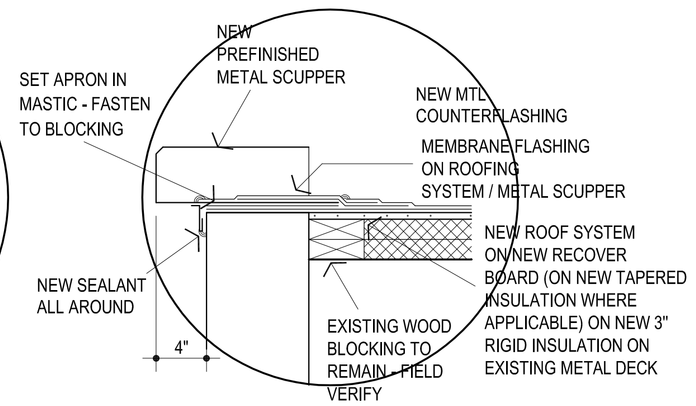

10 RELIEF SCUPPER W/ EXTENSION
NO SCALE

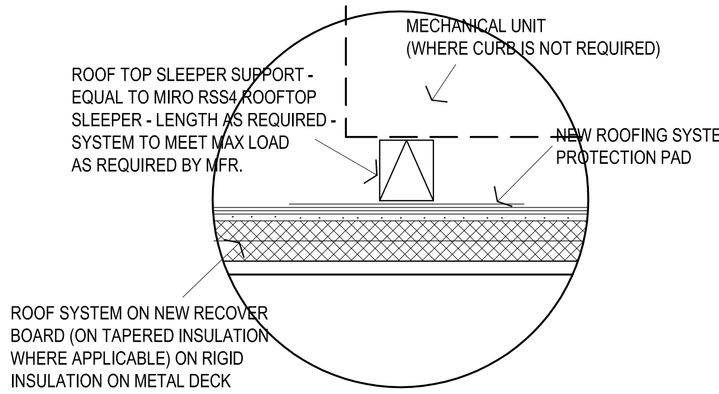

11 MECH. UNIT SUPPORT
NO SCALE

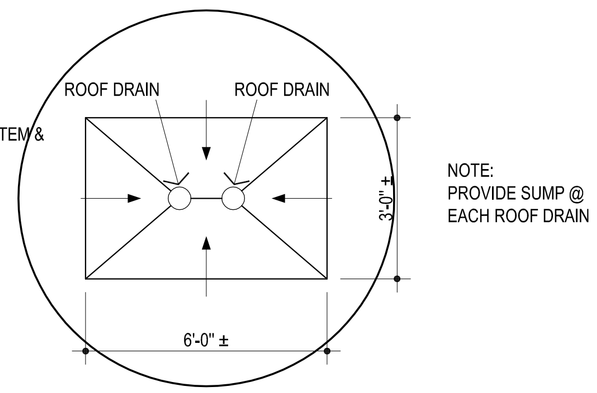

12 ROOF DRAIN SUMP @ OVERFLOW ROOF DRAIN
NO SCALE

AGP
the Abla Griffin Partnership L.L.C.
201 N. BROADWAY
SUITE 210
MOORE, OK. 73160
405.735.3477
AGP@theAGP.net
www.theAGP.net

CEDAR CREEK
CIVIL

KFC ENGINEERING
STRUCTURAL

SALAS O'BRIEN
MECHANICAL / ELECTRICAL

STATE OF OKLAHOMA
MICHAEL L. ABLA
2639
REGISTERED ARCHITECT
7/31/23

CG
drawn by

MA
checked by

JULY 2023
date

revisions

MOORE PUBLIC SCHOOLS
BOARD OF EDUCATION
MOORE, OKLAHOMA

MOORE Public Schools
LEARNING FOR LIFE

CLASSROOM ADDITION
HIGHLAND WEST
JUNIOR HIGH SCHOOL

sheet no:

A115

ROOF DETAILS

OWNERSHIP USE OF DOCUMENTS:

AGP EXPRESSLY RESERVES ITS COPYRIGHT AND OTHER PROPERTY RIGHTS OF ALL PLANS AND DRAWINGS DESIGNED AND/OR PRODUCED. PLANS AND DRAWINGS ARE NOT TO BE REPRODUCED IN ANY FORM OR MANNER WITHOUT THE EXPRESSED WRITTEN CONSENT OF AGP.

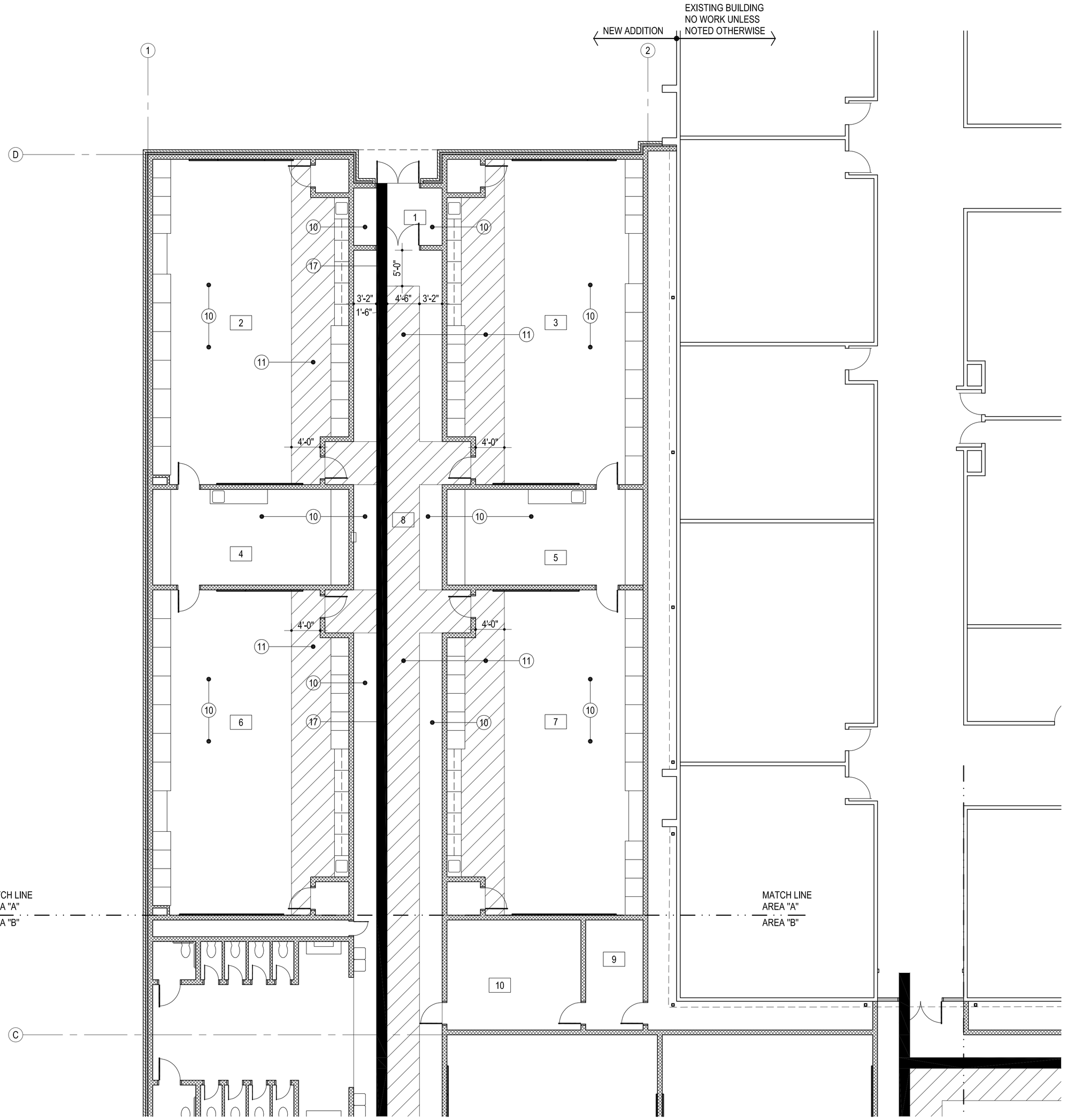

1 LVT & CARPET DIMENSION / DESIGN PLAN - AREA "A"

1/8" = 1'-0"

LUXURY VINYL TILE LEGEND:

ARMSTRONG LVT - NA931
COLLECTION - NATURAL CREATIONS DIAMOND 10 TECHNOLOGY MYSTIX
DESIGN - SPETTO
COLOR - CASPIAN SAND (10)

ARMSTRONG LVT - NA933
COLLECTION - NATURAL CREATIONS DIAMOND 10 TECHNOLOGY MYSTIX
DESIGN - SPETTO
COLOR - NILE NIGHT (11)

ARMSTRONG LVT - NA903
COLLECTION - NATURAL CREATIONS DIAMOND 10 TECHNOLOGY MYSTIX
DESIGN - SKYLINE
COLOR - HAWAIIAN PUNCH (17)

REFER TO ROOM FINISH SCHEDULE FOR ADDITIONAL LOCATIONS OF LVT

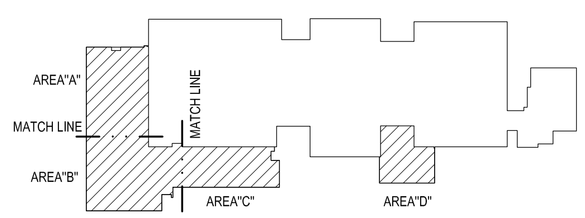

KEY PLAN

AGP
the Abla Griffin Partnership L.L.C.
201 N. BROADWAY
SUITE 210
MOORE, OK. 73160
405.735.3477
AGP@theAGP.net
www.theAGP.net

CEDAR CREEK
CIVIL

KFC ENGINEERING
STRUCTURAL

SALAS O'BRIEN
MECHANICAL / ELECTRICAL

STATE OF OKLAHOMA
MICHAEL L. ABLA
2639
REGISTERED ARCHITECT
OKLAHOMA CITY, OKLAHOMA
7/31/23

CG
drawn by

MA
checked by

JULY 2023
date

revisions

MOORE PUBLIC SCHOOLS
BOARD OF EDUCATION
MOORE, OKLAHOMA

MOORE Public Schools
LEARNING FOR LIFE

CLASSROOM ADDITION
HIGHLAND WEST
JUNIOR HIGH SCHOOL

sheet no:

A116

LVT PLAN

OWNERSHIP USE OF DOCUMENTS:

AGP EXPRESSLY RESERVES ITS COPYRIGHT AND OTHER PROPERTY RIGHTS OF ALL PLANS AND DRAWINGS DESIGNED AND/OR PRODUCED. PLANS AND DRAWINGS ARE NOT TO BE REPRODUCED IN ANY FORM OR MANNER WITHOUT THE EXPRESSED WRITTEN CONSENT OF AGP.

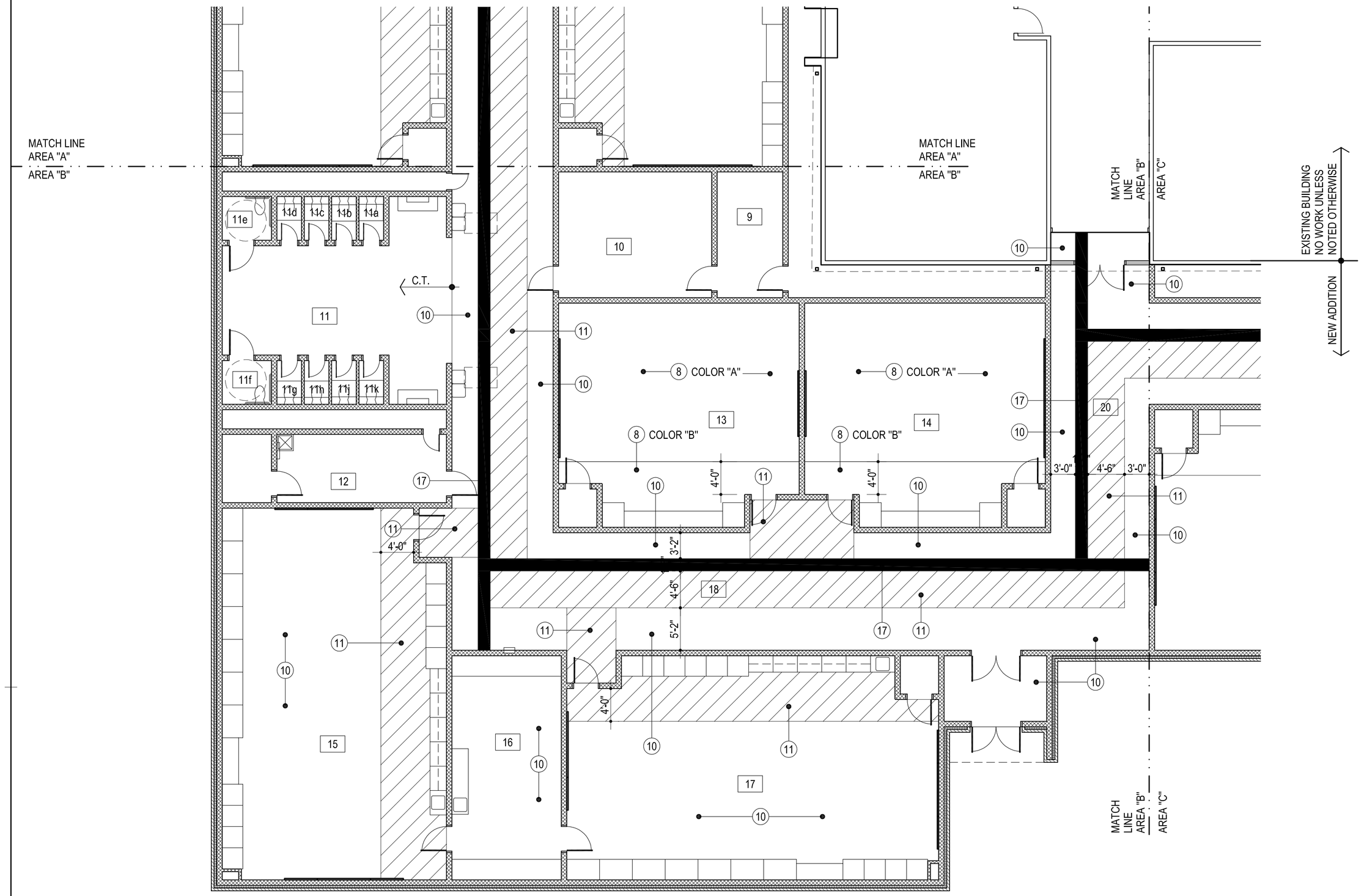

1 LVT & CARPET DIMENSION / DESIGN PLAN - AREA "B"

1/8" = 1'-0"

NORTH

LUXURY VINYL TILE LEGEND:

ARMSTRONG LVT - NA931
COLLECTION - NATURAL CREATIONS DIAMOND 10 TECHNOLOGY MYSTIX
DESIGN - SPETTO
COLOR - CASPIAN SAND (10)

ARMSTRONG LVT - NA933
COLLECTION - NATURAL CREATIONS DIAMOND 10 TECHNOLOGY MYSTIX
DESIGN - SPETTO
COLOR - NILE NIGHT (11)

ARMSTRONG LVT - NA903
COLLECTION - NATURAL CREATIONS DIAMOND 10 TECHNOLOGY MYSTIX
DESIGN - SKYLINE
COLOR - HAWAIIAN PUNCH (17)

REFER TO ROOM FINISH SCHEDULE FOR ADDITIONAL LOCATIONS OF LVT

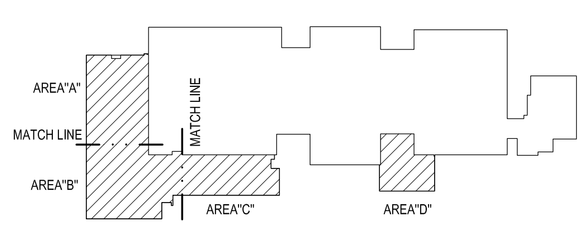

KEY PLAN

AGP
the Abla Griffin Partnership L.L.C.
201 N. BROADWAY
SUITE 210
MOORE, OK. 73160
405.735.3477
AGP@theAGP.net
www.theAGP.net

CEDAR CREEK
CIVIL

KFC ENGINEERING
STRUCTURAL

SALAS O'BRIEN
MECHANICAL / ELECTRICAL

STATE OF OKLAHOMA
MICHAEL L. ABLA
2639
REGISTERED ARCHITECT
OKLAHOMA CITY, OKLAHOMA
7/31/23

CG
drawn by

MA
checked by

JULY 2023
date

revisions

MOORE PUBLIC SCHOOLS
BOARD OF EDUCATION
MOORE, OKLAHOMA

MOORE Public Schools
LEARNING FOR LIFE

CLASSROOM ADDITION
HIGHLAND WEST
JUNIOR HIGH SCHOOL

sheet no:

A117

OVERALL FLOOR PLAN

OWNERSHIP USE OF DOCUMENTS:

AGP EXPRESSLY RESERVES ITS COPYRIGHT AND OTHER PROPERTY RIGHTS OF ALL PLANS AND DRAWINGS DESIGNED AND/OR PRODUCED. PLANS AND DRAWINGS ARE NOT TO BE REPRODUCED IN ANY FORM OR MANNER WITHOUT THE EXPRESSED WRITTEN CONSENT OF AGP.

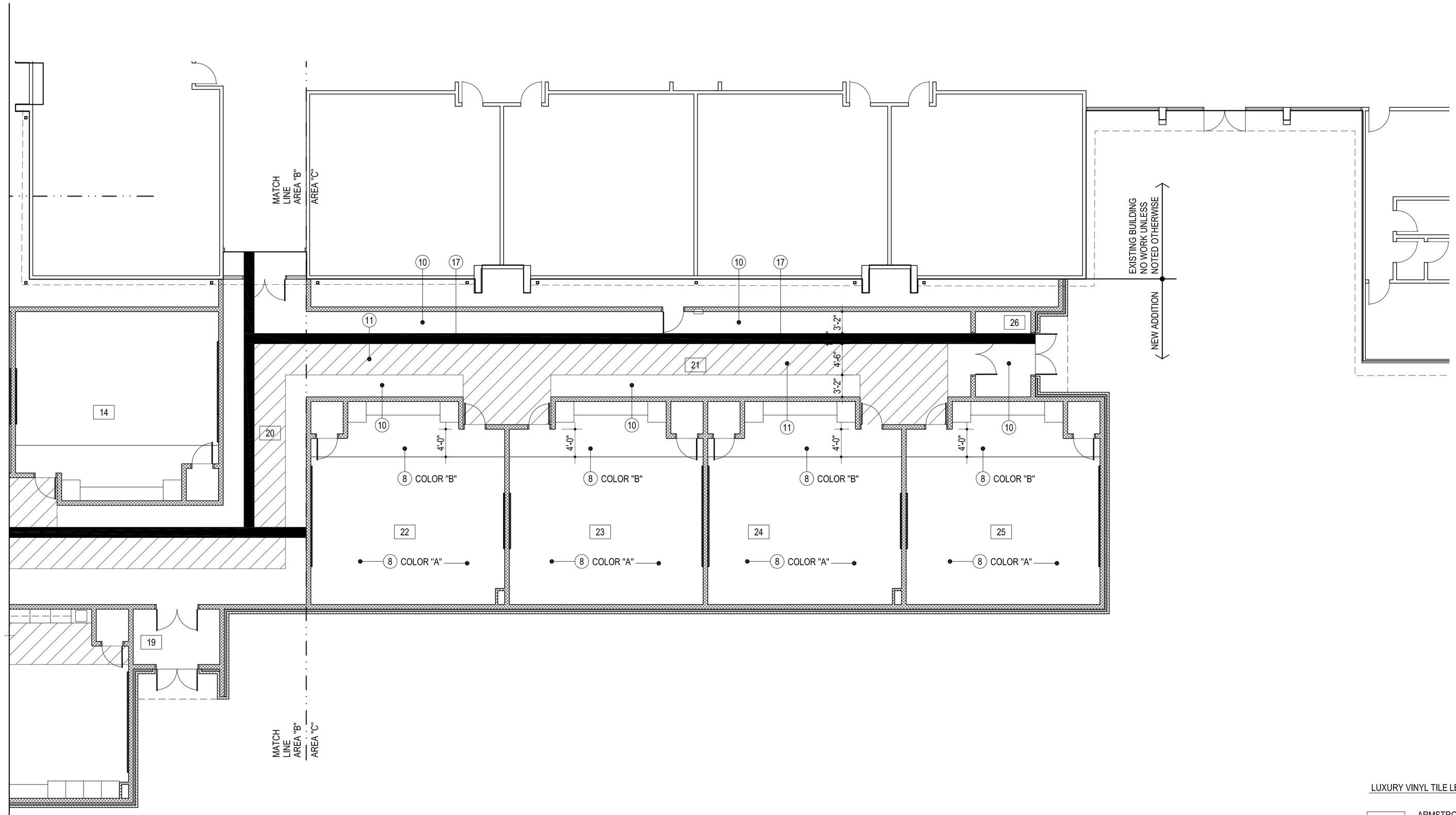

NORTH

1 LVT & CARPET DIMENSION / DESIGN PLAN - AREA "C"

1/8" = 1'-0"

LUXURY VINYL TILE LEGEND:

ARMSTRONG LVT - NA931
COLLECTION - NATURAL CREATIONS DIAMOND 10 TECHNOLOGY MYSTIX
DESIGN - SPETTO
COLOR - CASPIAN SAND (10)

ARMSTRONG LVT - NA933
COLLECTION - NATURAL CREATIONS DIAMOND 10 TECHNOLOGY MYSTIX
DESIGN - SPETTO
COLOR - NILE NIGHT (11)

ARMSTRONG LVT - NA903
COLLECTION - NATURAL CREATIONS DIAMOND 10 TECHNOLOGY MYSTIX
DESIGN - SKYLINE
COLOR - HAWAIIAN PUNCH (17)

REFER TO ROOM FINISH SCHEDULE FOR ADDITIONAL LOCATIONS OF LVT

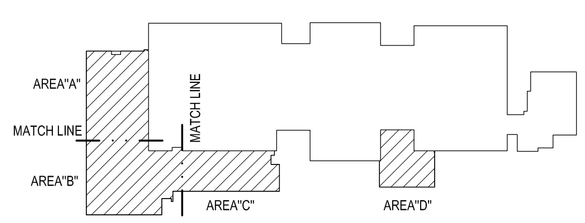

KEY PLAN

AGP
the Abla Griffin Partnership L.L.C.
201 N. BROADWAY
SUITE 210
MOORE, OK. 73160
405.735.3477
AGP@theAGP.net
www.theAGP.net

CEDAR CREEK
CIVIL

KFC ENGINEERING
STRUCTURAL

SALAS O'BRIEN
MECHANICAL / ELECTRICAL

STATE OF OKLAHOMA
MICHAEL L. ABLA
2639
REGISTERED ARCHITECT
7/31/23

CG
drawn by

MA
checked by

JULY 2023
date

revisions

MOORE PUBLIC SCHOOLS
BOARD OF EDUCATION
MOORE, OKLAHOMA

MOORE Public Schools
LEARNING FOR LIFE

CLASSROOM ADDITION
HIGHLAND WEST
JUNIOR HIGH SCHOOL

sheet no:

A118

LVT FLOOR PLAN

OWNERSHIP USE OF DOCUMENTS:

AGP EXPRESSLY RESERVES ITS COPYRIGHT AND OTHER PROPERTY RIGHTS OF ALL PLANS AND DRAWINGS DESIGNED AND/OR PRODUCED. PLANS AND DRAWINGS ARE NOT TO BE REPRODUCED IN ANY FORM OR MANNER WITHOUT THE EXPRESSED WRITTEN CONSENT OF AGP.

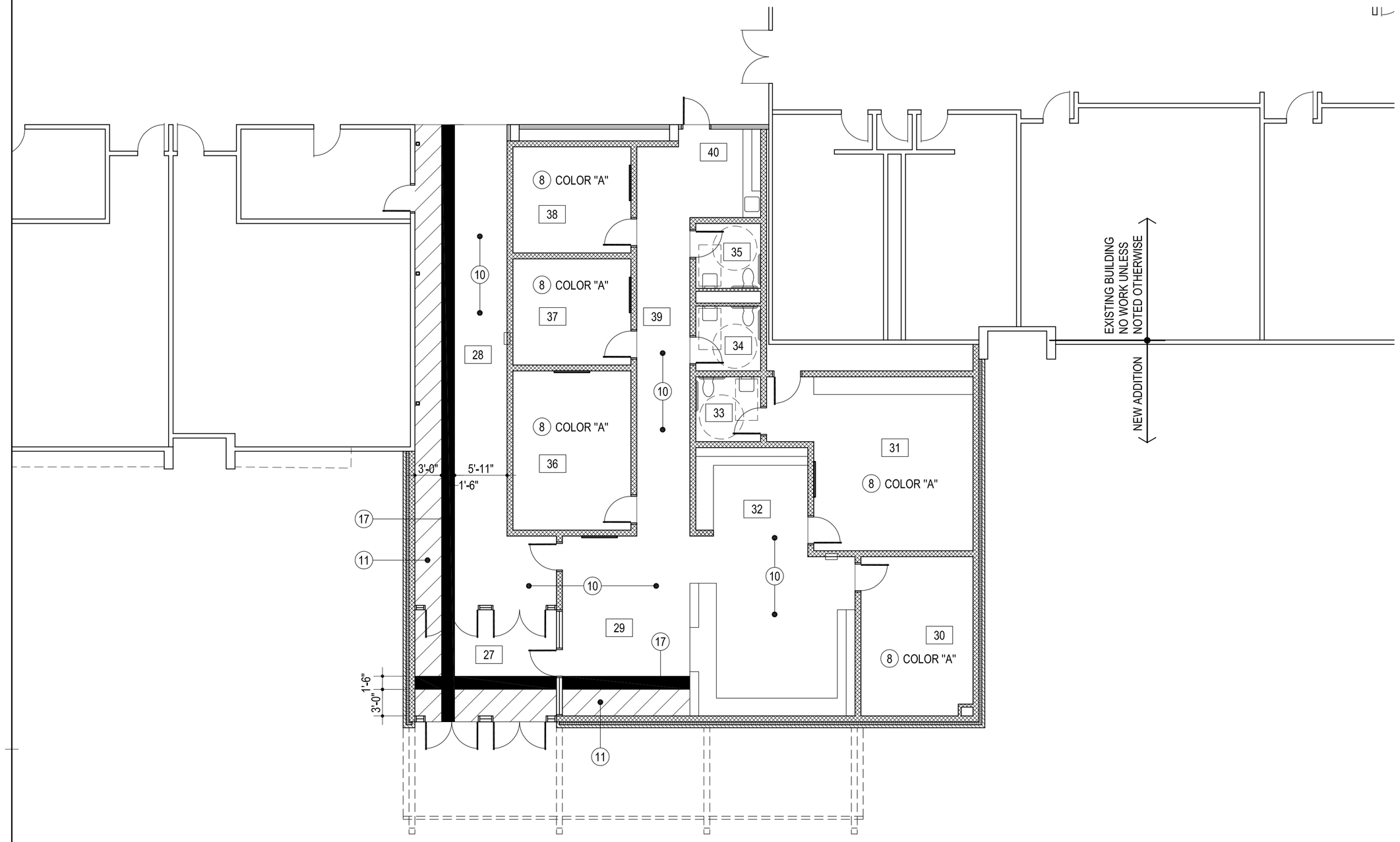

NORTH

1 LVT & CARPET DIMENSION / DESIGN PLAN - AREA "D"

1/8" = 1'-0"

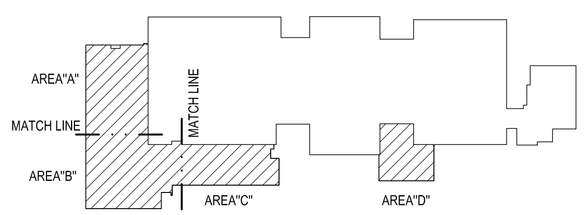

KEY PLAN

LUXURY VINYL TILE LEGEND:

ARMSTRONG LVT - NA931
COLLECTION - NATURAL CREATIONS DIAMOND 10 TECHNOLOGY MYSTIX
DESIGN - SPETTO
COLOR - CASPIAN SAND (10)

ARMSTRONG LVT - NA933
COLLECTION - NATURAL CREATIONS DIAMOND 10 TECHNOLOGY MYSTIX
DESIGN - SPETTO
COLOR - NILE NIGHT (11)

ARMSTRONG LVT - NA903
COLLECTION - NATURAL CREATIONS DIAMOND 10 TECHNOLOGY MYSTIX
DESIGN - SKYLINE
COLOR - HAWAIIAN PUNCH (17)

REFER TO ROOM FINISH SCHEDULE FOR ADDITIONAL LOCATIONS OF LVT

AGP
the Abla Griffin Partnership L.L.C.
201 N. BROADWAY
SUITE 210
MOORE, OK. 73160
405.735.3477
AGP@theAGP.net
www.theAGP.net

CEDAR CREEK
CIVIL

KFC ENGINEERING
STRUCTURAL

SALAS O'BRIEN
MECHANICAL / ELECTRICAL

STATE OF OKLAHOMA
MICHAEL L. ABLA
2639
REGISTERED ARCHITECT
OKLAHOMA CITY, OKLAHOMA
7/31/23

CG
drawn by

MA
checked by

JULY 2023
date

revisions

MOORE PUBLIC SCHOOLS
BOARD OF EDUCATION
MOORE, OKLAHOMA

MOORE Public Schools
LEARNING FOR LIFE

CLASSROOM ADDITION
HIGHLAND WEST
JUNIOR HIGH SCHOOL

sheet no:

A119

LVT FLOOR PLAN

OWNERSHIP USE OF DOCUMENTS:

AGP EXPRESSLY RESERVES ITS COPYRIGHT AND OTHER PROPERTY RIGHTS OF ALL PLANS AND DRAWINGS DESIGNED AND/OR PRODUCED. PLANS AND DRAWINGS ARE NOT TO BE REPRODUCED IN ANY FORM OR MANNER WITHOUT THE EXPRESSED WRITTEN CONSENT OF AGP.

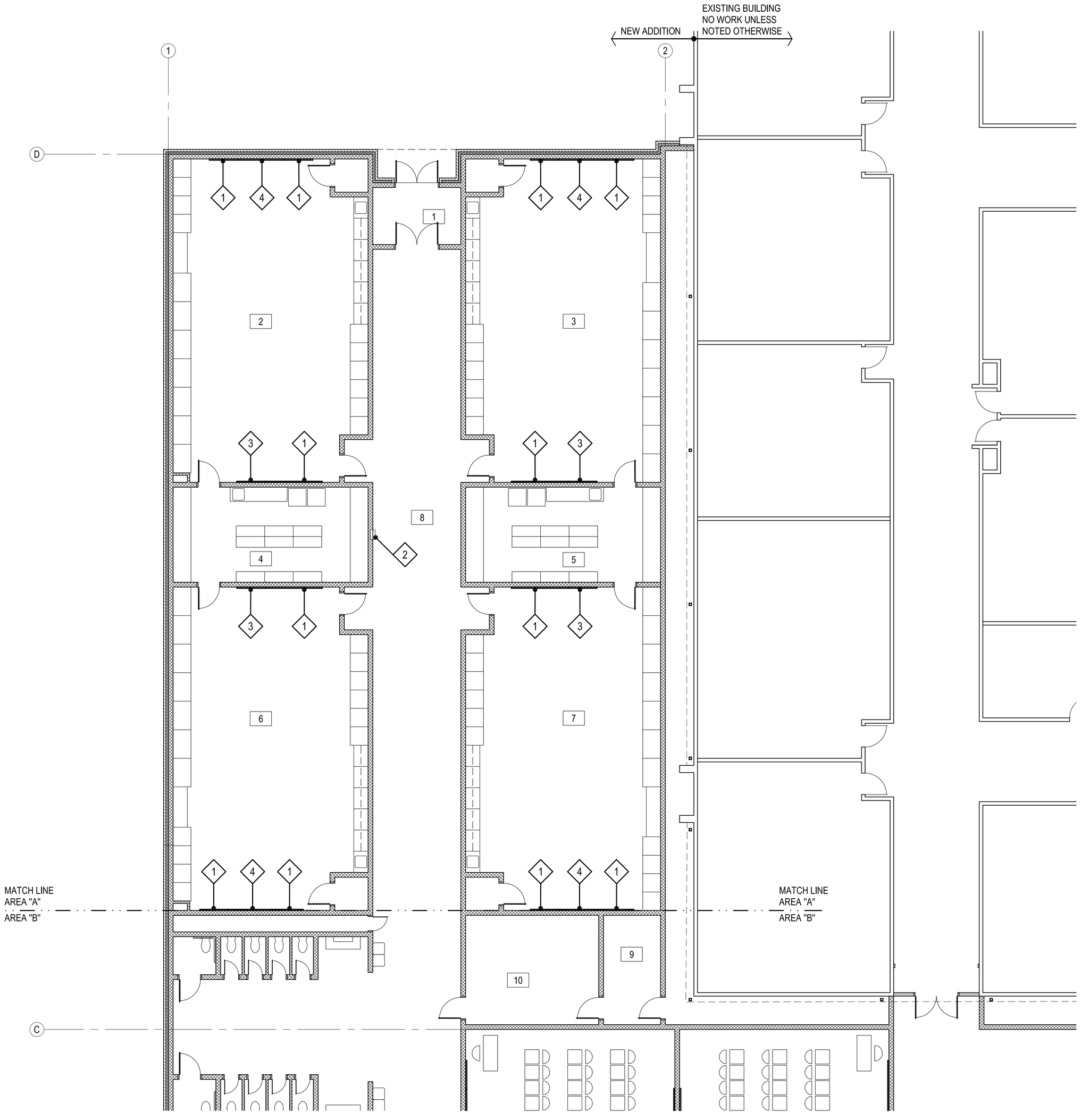

1 EQUIPMENT FLOOR PLAN - AREA "A"

1/8" = 1'-0"

ITEM NO.	CFI	OF/CI	OFI	DESCRIPTION	MANUFACTURER NAME	MODEL NO.	REMARKS
1	●			MARKERBOARD - 4'-0"	BEST-RITE CHALKBOARD CO.	RE: SPECS	W/ CHALK RAIL
2	●			FIRE EXTINGUISHER & CABINET	JL INDUSTRIES	RE: SPECS	
3	●			TACKBOARD - 8'-0"	BEST-RITE CHALKBOARD CO.	RE: SPECS	
4			●	SMARTBOARD			BY OWNER
5		●		TOILET PAPER HOLDER			
6		●		PAPER TOWEL DISPENSER			
7		●		SOAP DISPENSER			

NOTE:

ALL CHALKBOARDS & TACKBOARDS MOUNTED @ EXTERIOR WALLS SHALL HAVE "STAND-OFF" MOUNTING BRACKETS TO PREVENT CONDENSATION BEHIND BOARDS.

2 EQUIPMENT SCHEDULE

LEGEND :

- 4 — CONTRACTOR FURNISHED AND INSTALLED (CFI)
- 4 — OWNER FURNISHED AND INSTALLED (OFI)
- 4 — OWNER FURNISHED AND CONTRACTOR INSTALLED (OF / CI)

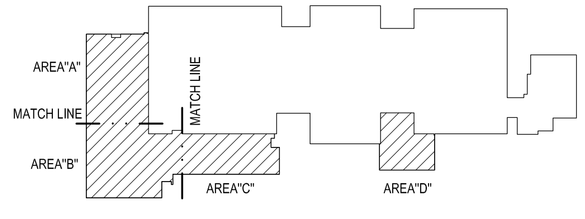

KEY PLAN

AGP
the Abla Griffin Partnership L.L.C.
201 N. BROADWAY
SUITE 210
MOORE, OK. 73160
405.735.3477
AGP@theAGP.net
www.theAGP.net

CEDAR CREEK
CIVIL

KFC ENGINEERING
STRUCTURAL

SALAS O'BRIEN
MECHANICAL / ELECTRICAL

STATE OF OKLAHOMA
MICHAEL L. ABLA 2639
LICENSED ARCHITECT
OKLAHOMA CITY, OKLAHOMA
7/31/23

CG
drawn by

MA
checked by

JULY 2023
date

revisions

MOORE PUBLIC SCHOOLS
BOARD OF EDUCATION
MOORE, OKLAHOMA

MOORE Public Schools
LEARNING FOR LIFE

CLASSROOM ADDITION
HIGHLAND WEST
JUNIOR HIGH SCHOOL

sheet no:

A120

EQUIPMENT PLAN

OWNERSHIP USE OF DOCUMENTS:

AGP EXPRESSLY RESERVES ITS COPYRIGHT AND OTHER PROPERTY RIGHTS OF ALL PLANS AND DRAWINGS DESIGNED AND/OR PRODUCED. PLANS AND DRAWINGS ARE NOT TO BE REPRODUCED IN ANY FORM OR MANNER WITHOUT THE EXPRESSED WRITTEN CONSENT OF AGP.

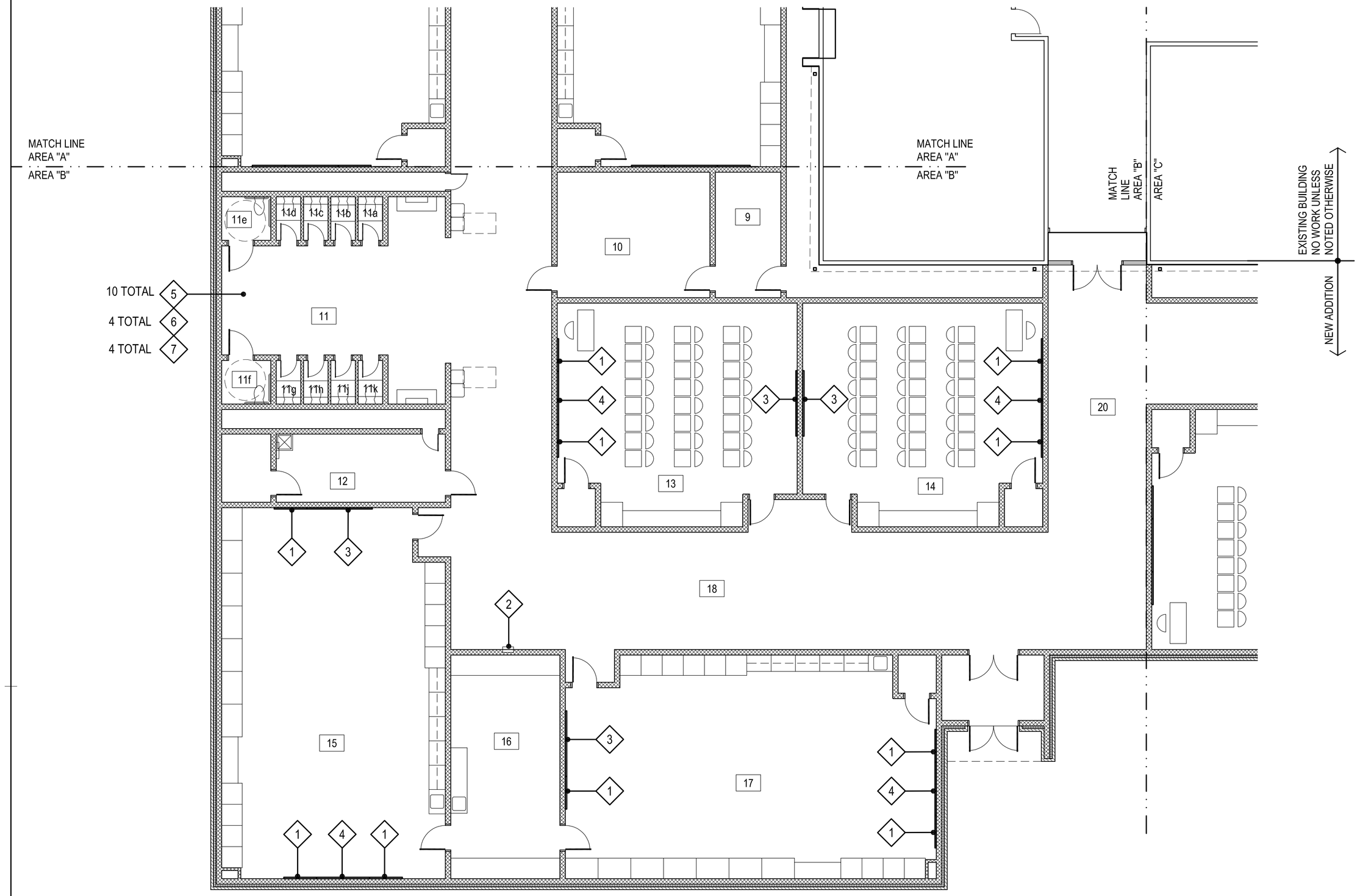

1 EQUIPMENT PLAN - AREA "B"

1/8" = 1'-0"

NORTH

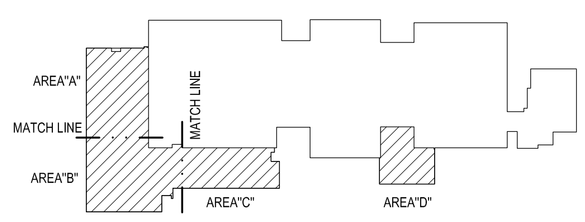

KEY PLAN

AGP
the Abla Griffin Partnership L.L.C.
201 N. BROADWAY
SUITE 210
MOORE, OK. 73160
405.735.3477
AGP@theAGP.net
www.theAGP.net

CEDAR CREEK
CIVIL

KFC ENGINEERING
STRUCTURAL

SALAS O'BRIEN
MECHANICAL / ELECTRICAL

STATE OF OKLAHOMA
MICHAEL L. ABLA
2639
REGISTERED ARCHITECT
OKLAHOMA CITY, OKLAHOMA
7/31/23

CG
drawn by

MA
checked by

JULY 2023
date

revisions

MOORE PUBLIC SCHOOLS
BOARD OF EDUCATION
MOORE, OKLAHOMA

MOORE Public Schools
LEARNING FOR LIFE

CLASSROOM ADDITION
HIGHLAND WEST
JUNIOR HIGH SCHOOL

sheet no:

A121

EQUIPMENT PLAN

OWNERSHIP USE OF DOCUMENTS:

AGP EXPRESSLY RESERVES ITS COPYRIGHT AND OTHER PROPERTY RIGHTS OF ALL PLANS AND DRAWINGS DESIGNED AND/OR PRODUCED. PLANS AND DRAWINGS ARE NOT TO BE REPRODUCED IN ANY FORM OR MANNER WITHOUT THE EXPRESSED WRITTEN CONSENT OF AGP.

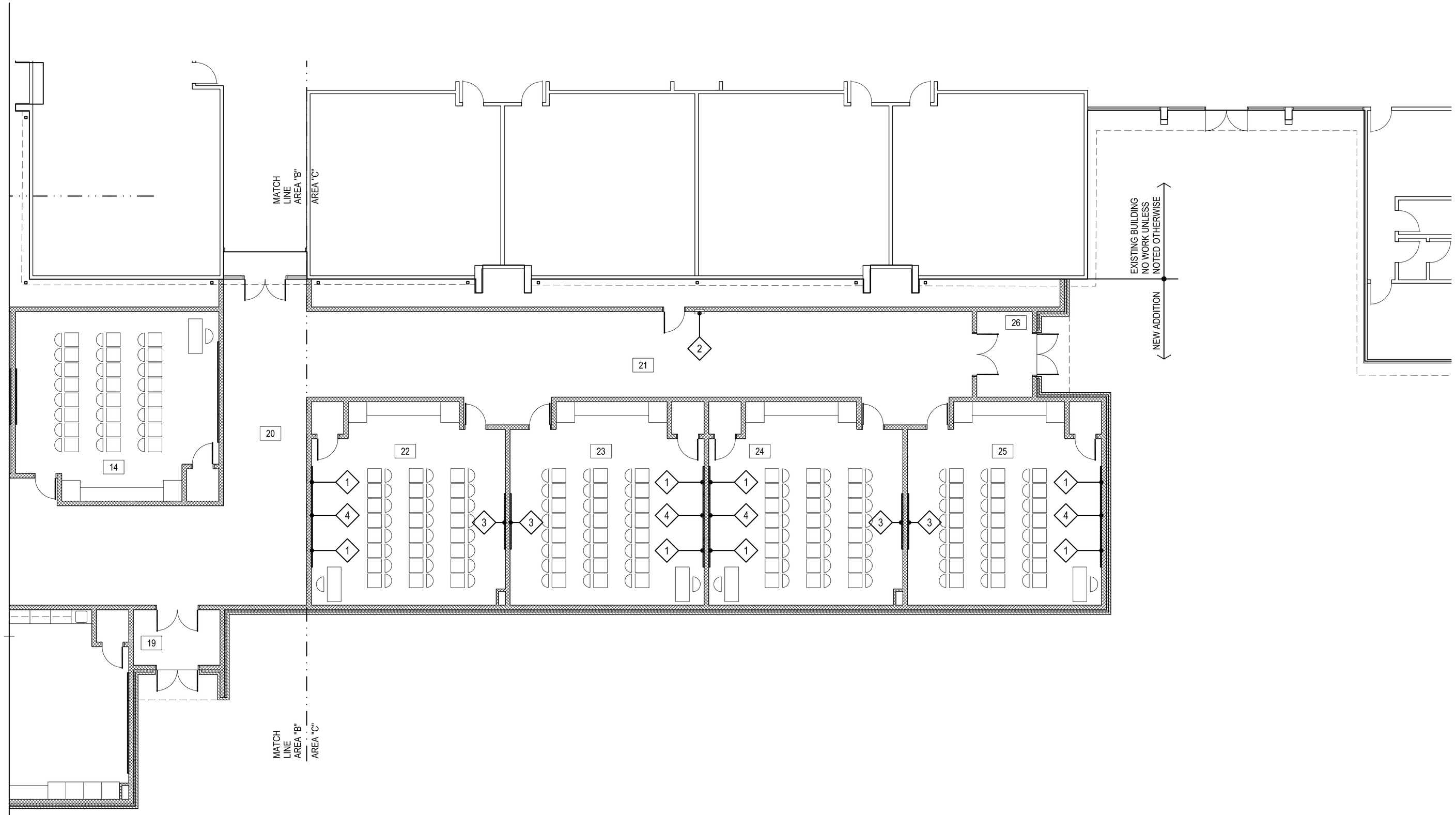

NORTH

1 EQUIPMENT PLAN - AREA "C"

1/8" = 1'-0"

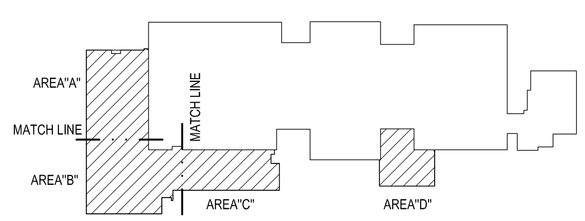

KEY PLAN

AGP
the Abla Griffin Partnership L.L.C.

201 N. BROADWAY
SUITE 210
MOORE, OK. 73160
405.735.3477
AGP@theAGP.net
www.theAGP.net

CEDAR CREEK
CIVIL

KFC ENGINEERING
STRUCTURAL

SALAS O'BRIEN
MECHANICAL / ELECTRICAL

STATE OF OKLAHOMA
MICHAEL L. ABLA
2639
OKLAHOMA CITY, OKLAHOMA
LICENSED ARCHITECT
7/31/23

CG
drawn by

MA
checked by

JULY 2023
date

revisions

MOORE PUBLIC SCHOOLS
BOARD OF EDUCATION
MOORE, OKLAHOMA

MOORE Public Schools
LEARNING FOR LIFE

CLASSROOM ADDITION
HIGHLAND WEST
JUNIOR HIGH SCHOOL

sheet no:

A122

EQUIPMENT PLAN

OWNERSHIP USE OF DOCUMENTS:

AGP EXPRESSLY RESERVES ITS COPYRIGHT AND OTHER PROPERTY RIGHTS OF ALL PLANS AND DRAWINGS DESIGNED AND/OR PRODUCED. PLANS AND DRAWINGS ARE NOT TO BE REPRODUCED IN ANY FORM OR MANNER WITHOUT THE EXPRESSED WRITTEN CONSENT OF AGP.

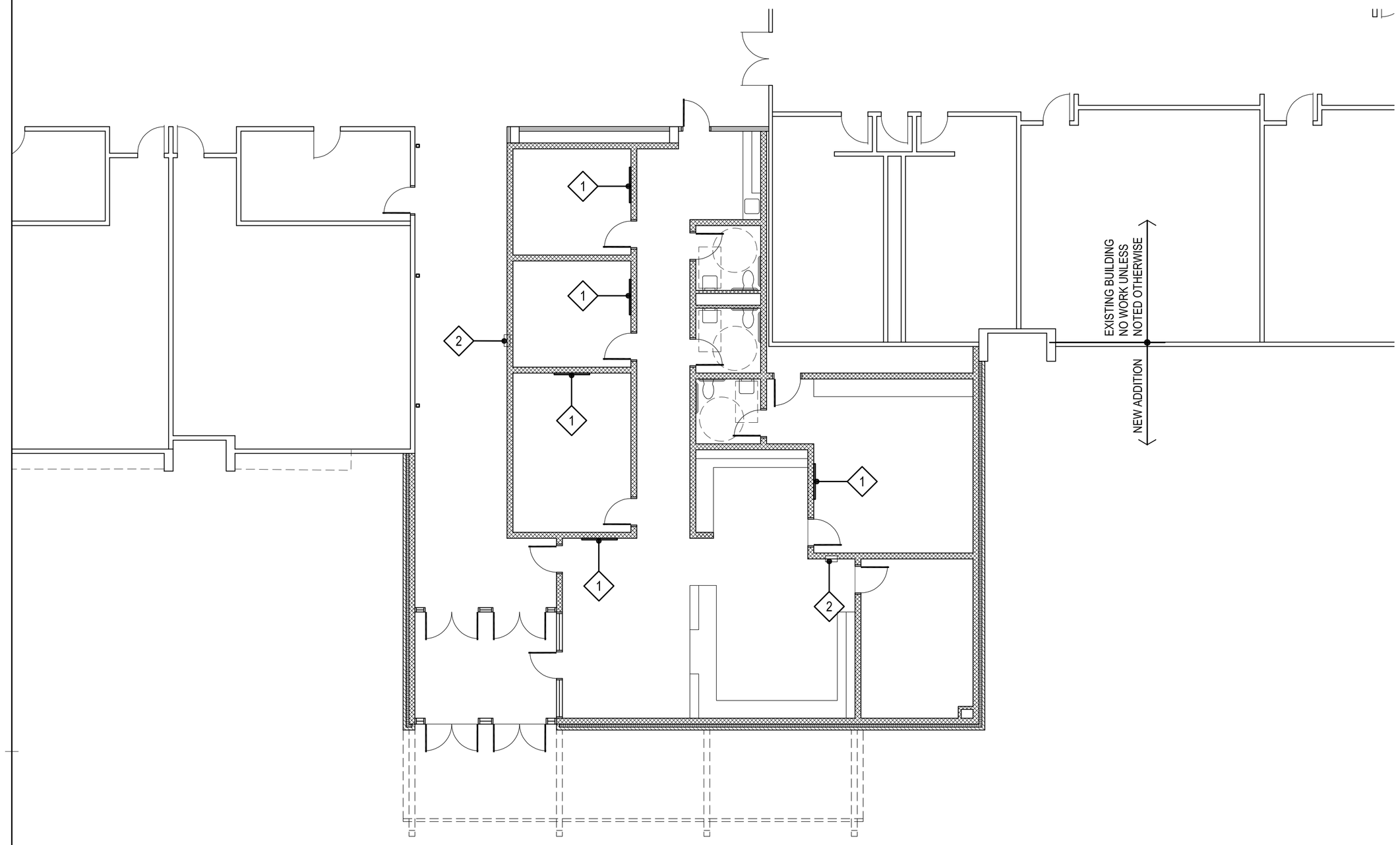

NORTH

1 EQUIPMENT PLAN - AREA "D"

1/8" = 1'-0"

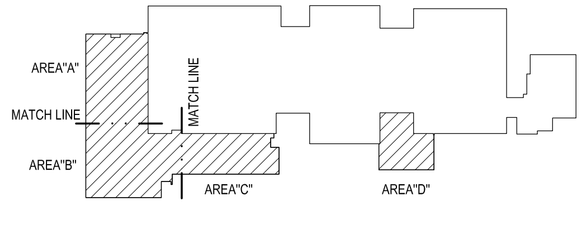

KEY PLAN

AGP
the Abla Griffin Partnership L.L.C.

201 N. BROADWAY
SUITE 210
MOORE, OK. 73160
405.735.3477
AGP@theAGP.net
www.theAGP.net

CEDAR CREEK
CIVIL

KFC ENGINEERING
STRUCTURAL

SALAS O'BRIEN
MECHANICAL / ELECTRICAL

STATE OF OKLAHOMA
MICHAEL L. ABLA
2639
REGISTERED ARCHITECT
OKLAHOMA CITY, OKLAHOMA

7/31/23

CG
drawn by

MA
checked by

JULY 2023
date

revisions

MOORE PUBLIC SCHOOLS
BOARD OF EDUCATION
MOORE, OKLAHOMA

MOORE Public Schools
LEARNING FOR LIFE

CLASSROOM ADDITION
HIGHLAND WEST
JUNIOR HIGH SCHOOL

sheet no:

A123

EQUIPMENT PLAN

OWNERSHIP USE OF DOCUMENTS:

AGP EXPRESSLY RESERVES ITS COPYRIGHT AND OTHER PROPERTY RIGHTS OF ALL PLANS AND DRAWINGS DESIGNED AND/OR PRODUCED. PLANS AND DRAWINGS ARE NOT TO BE REPRODUCED IN ANY FORM OR MANNER WITHOUT THE EXPRESSED WRITTEN CONSENT OF AGP.

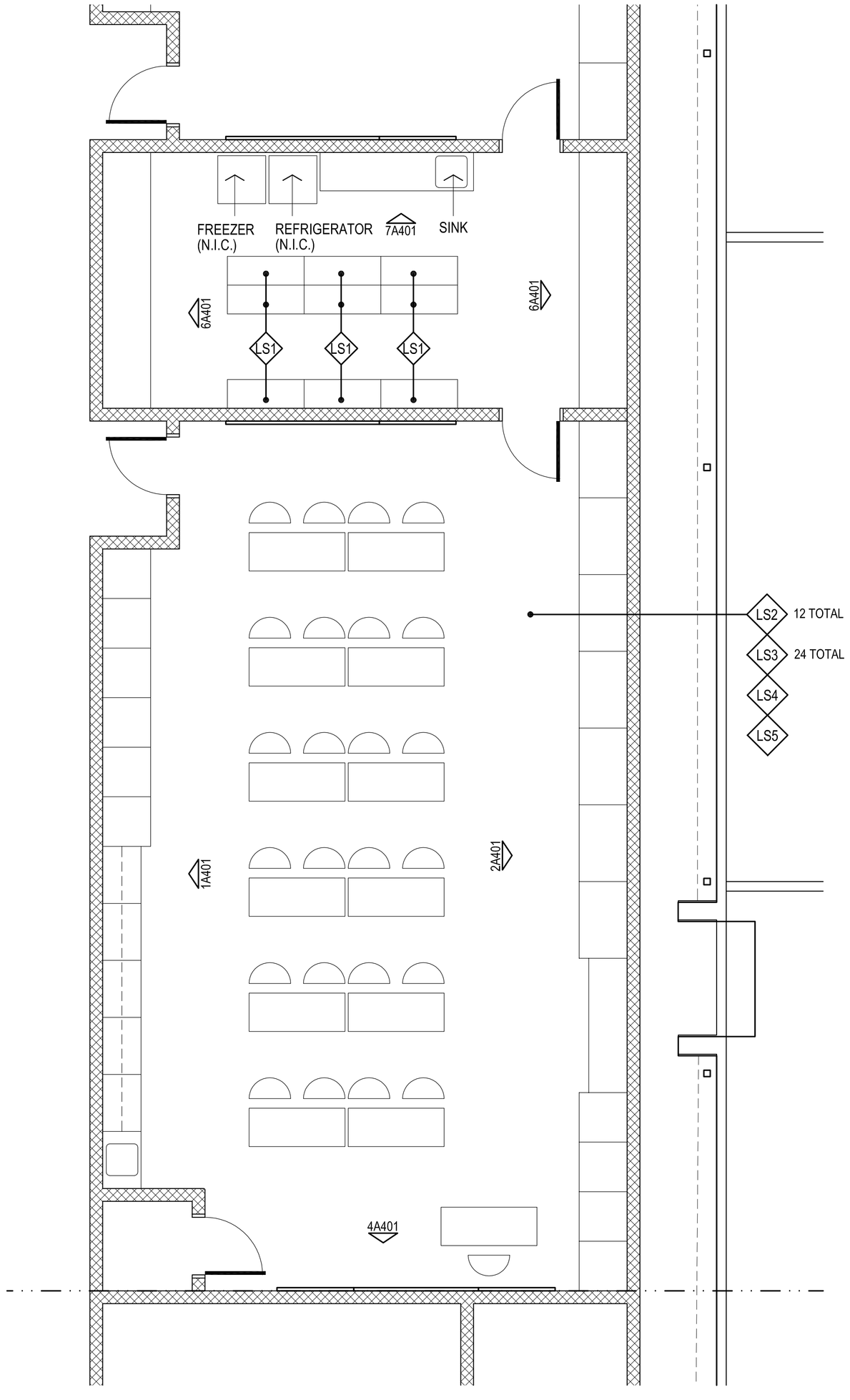

1 ENLARGED FLOOR PLAN - TYPICAL LAB EQUIPMENT & STORAGE ROOM

1/4" = 1'-0"

NORTH

ITEM NO.	CFI	OF / OI	DESCRIPTION	MANUFACTURER NAME	MANUFACTURER MODEL NO.	COLOR	REMARKS
LS1		●	LAB CABINETS	KEWANEE	S20W841648-5014	RE: SPEC'S	BY OTHERS
LS2		●	LAB TABLE			RE: SPEC'S	BY OTHERS
LS3		●	STOOL			RE: SPEC'S	BY OTHERS
LS4		●	TEACHER'S CHAIR			RE: SPEC'S	BY OTHERS
LS5		●	TEACHER'S DESK			RE: SPEC'S	BY OTHERS
LS6		●	3-D PRINTER			RE: SPEC'S	BY OTHERS

2 LAB EQUIPMENT SCHEDULE - LAB & STORAGE ROOMS

PROVIDED FOR INFORMATION ONLY
OMIT LS1 AT STORAGE ROOM #16

LEGEND :

4 CONTRACTOR FURNISHED AND INSTALLED (CFI)

4 OWNER FURNISHED AND OWNER INSTALLED (OF / OI)

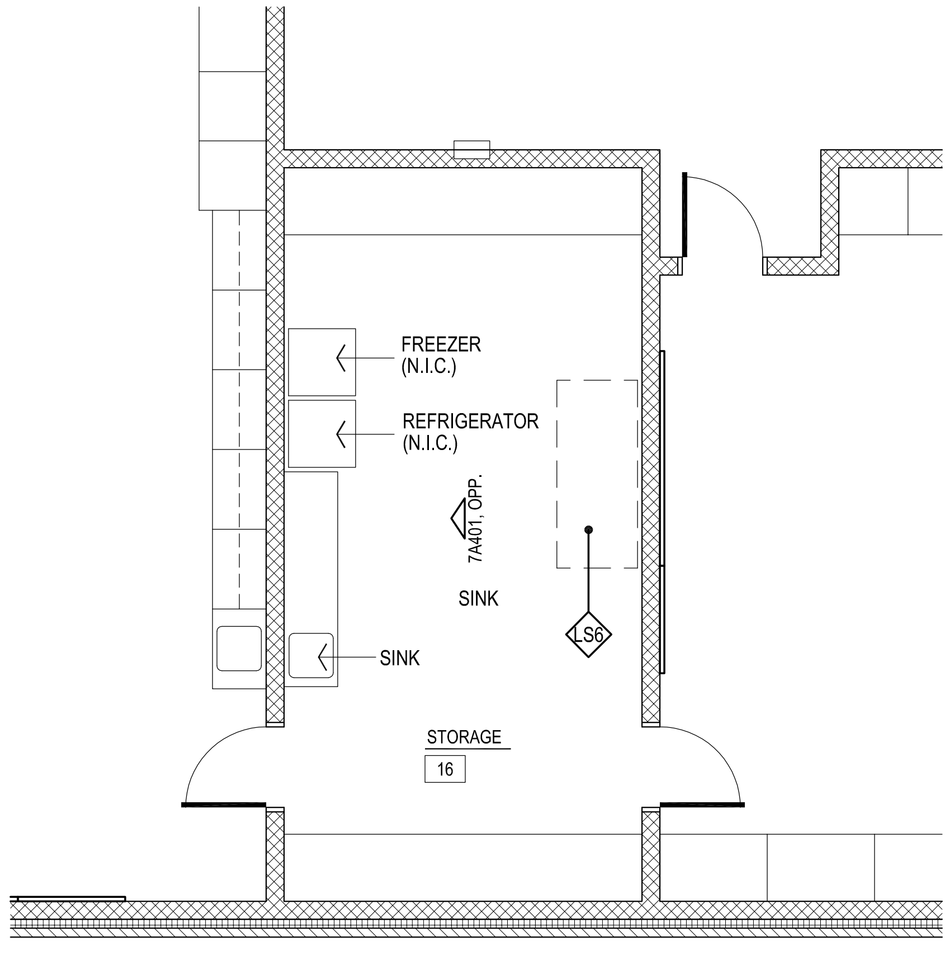

3 ENLARGED FLOOR PLAN ROOM #16

1/4" = 1'-0"

NORTH

AGP
the Abla Griffin Partnership L.L.C.
201 N. BROADWAY
SUITE 210
MOORE, OK. 73160
405.735.3477
AGP@theAGP.net
www.theAGP.net

CEDAR CREEK
CIVIL

KFC ENGINEERING
STRUCTURAL

SALAS O'BRIEN
MECHANICAL / ELECTRICAL

STATE OF OKLAHOMA
MICHAEL L. ABLA
2639
REGISTERED ARCHITECT
7/31/23

CG
drawn by

MA
checked by

JULY 2023
date

revisions

MOORE PUBLIC SCHOOLS
BOARD OF EDUCATION
MOORE, OKLAHOMA

MOORE Public Schools
LEARNING FOR LIFE

CLASSROOM ADDITION
HIGHLAND WEST
JUNIOR HIGH SCHOOL

sheet no:

A124

ENLARGED FLOOR PLAN

OWNERSHIP USE OF DOCUMENTS:

AGP EXPRESSLY RESERVES ITS COPYRIGHT AND OTHER PROPERTY RIGHTS OF ALL PLANS AND DRAWINGS DESIGNED AND/OR PRODUCED. PLANS AND DRAWINGS ARE NOT TO BE REPRODUCED IN ANY FORM OR MANNER WITHOUT THE EXPRESSED WRITTEN CONSENT OF AGP.

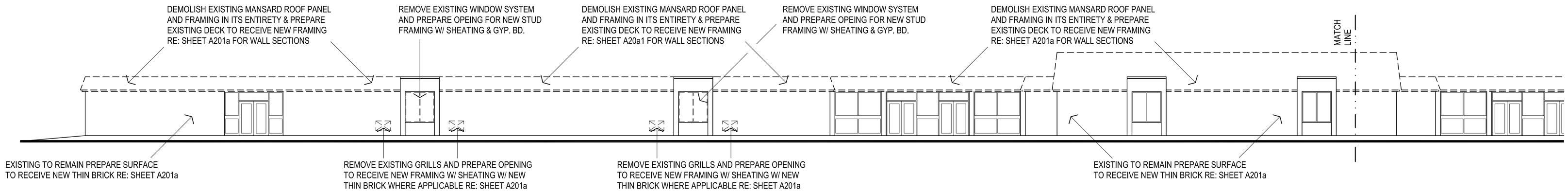

1 EAST ELEVATION DEMOLITION

3/32" = 1'-0"

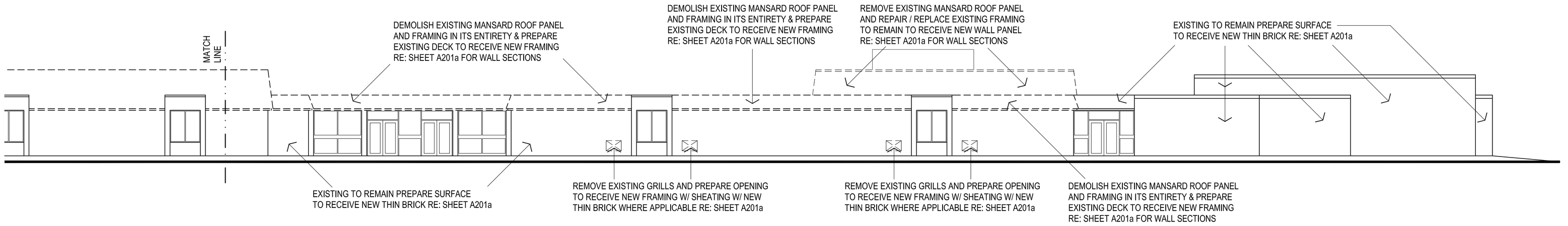

1 EAST ELEVATION DEMOLITION - CONT.

3/32" = 1'-0"

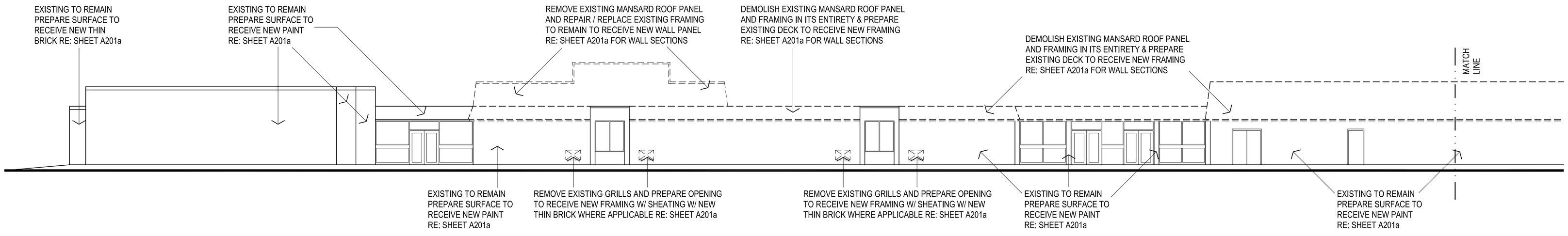

2 WEST ELEVATION DEMOLITION

3/32" = 1'-0"

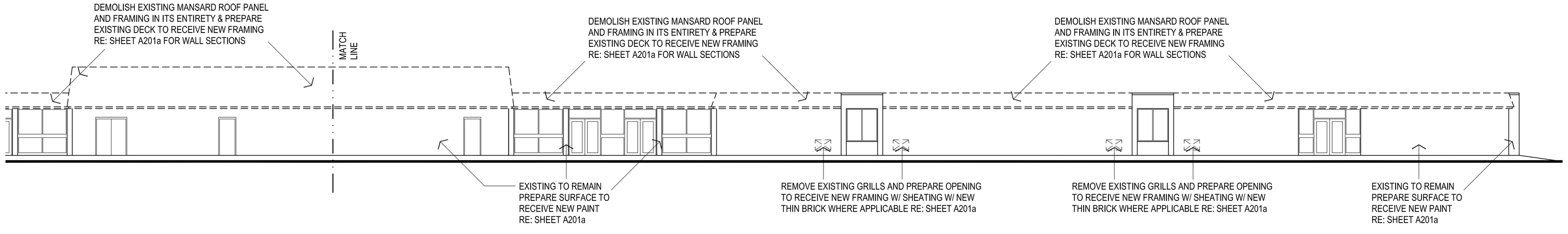

2 WEST ELEVATION DEMOLITION - CONT.

3/32" = 1'-0"

AGP
the Abla Griffin Partnership L.L.C.
201 N. BROADWAY
SUITE 210
MOORE, OK. 73160
405.735.3477
AGP@theAGP.net
www.theAGP.net

CEDAR CREEK
CIVIL

KFC ENGINEERING
STRUCTURAL

SALAS O'BRIEN
MECHANICAL / ELECTRICAL

STATE OF OKLAHOMA
MICHAEL L. ABLA
2639
REGISTERED ARCHITECT
7/31/23

CG
drawn by

MA
checked by

JULY 2023
date

revisions

MOORE PUBLIC SCHOOLS
BOARD OF EDUCATION
MOORE, OKLAHOMA

MOORE Public Schools
LEARNING FOR LIFE

CLASSROOM ADDITION
HIGHLAND WEST
JUNIOR HIGH SCHOOL

sheet no:

A201

ELEVATIONS

OWNERSHIP USE OF DOCUMENTS:

AGP EXPRESSLY RESERVES ITS COPYRIGHT AND OTHER PROPERTY RIGHTS OF ALL PLANS AND DRAWINGS DESIGNED AND/OR PRODUCED. PLANS AND DRAWINGS ARE NOT TO BE REPRODUCED IN ANY FORM OR MANNER WITHOUT THE EXPRESSED WRITTEN CONSENT OF AGP.

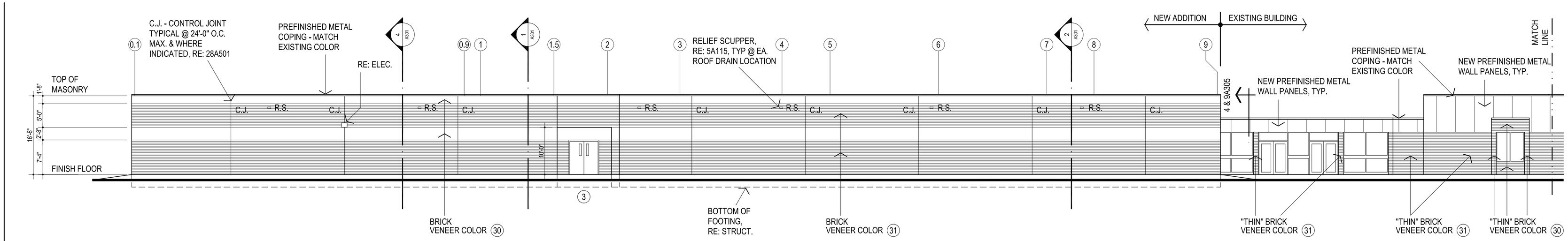

1 EAST ELEVATION

3/32" = 1'-0"

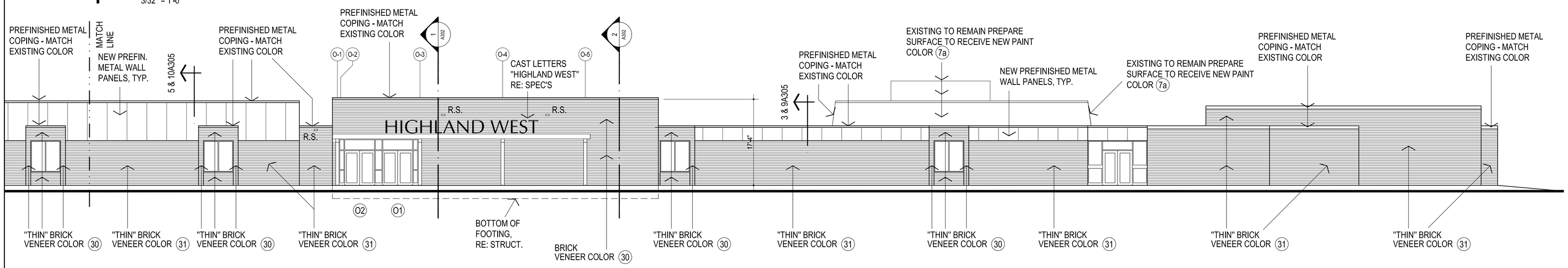

1 EAST ELEVATION - CONT.

3/32" = 1'-0"

GENERAL NOTE:

1. PAINT ALL EXISTING H.M. DOORS & FRAMES COLOR (4)
2. PAINT ALL EXISTING WINDOW FRAMES COLOR (4)

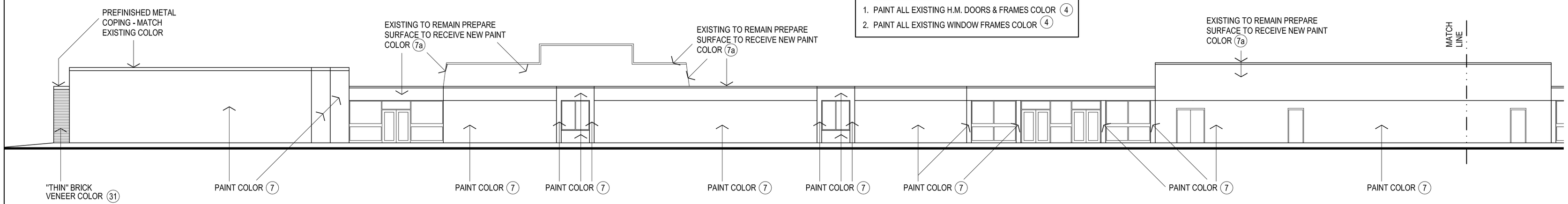

2 WEST ELEVATION

3/32" = 1'-0"

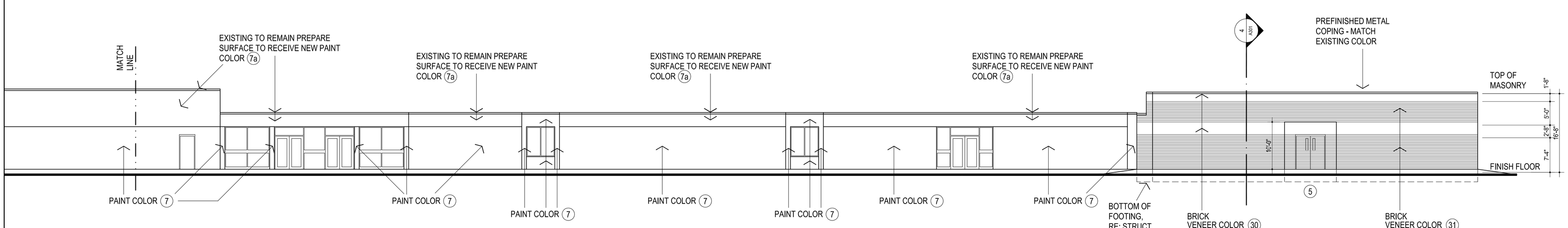

2 WEST ELEVATION - CONT.

3/32" = 1'-0"

AGP
the Abla Griffin Partnership L.L.C.
201 N. BROADWAY
SUITE 210
MOORE, OK. 73160
405.735.3477
AGP@theAGP.net
www.theAGP.net

CEDAR CREEK
CIVIL

KFC ENGINEERING
STRUCTURAL

SALAS O'BRIEN
MECHANICAL / ELECTRICAL

STATE OF OKLAHOMA
MICHAEL L. ABLA
2639
REGISTERED ARCHITECT
7/31/23

CG
drawn by

MA
checked by

JULY 2023
date

revisions

MOORE PUBLIC SCHOOLS
BOARD OF EDUCATION
MOORE, OKLAHOMA

MOORE Public Schools
LEARNING FOR LIFE

CLASSROOM ADDITION
HIGHLAND WEST
JUNIOR HIGH SCHOOL

sheet no:

A201a

ELEVATIONS

OWNERSHIP USE OF DOCUMENTS:

AGP EXPRESSLY RESERVES ITS COPYRIGHT AND OTHER PROPERTY RIGHTS OF ALL PLANS AND DRAWINGS DESIGNED AND/OR PRODUCED. PLANS AND DRAWINGS ARE NOT TO BE REPRODUCED IN ANY FORM OR MANNER WITHOUT THE EXPRESSED WRITTEN CONSENT OF AGP.

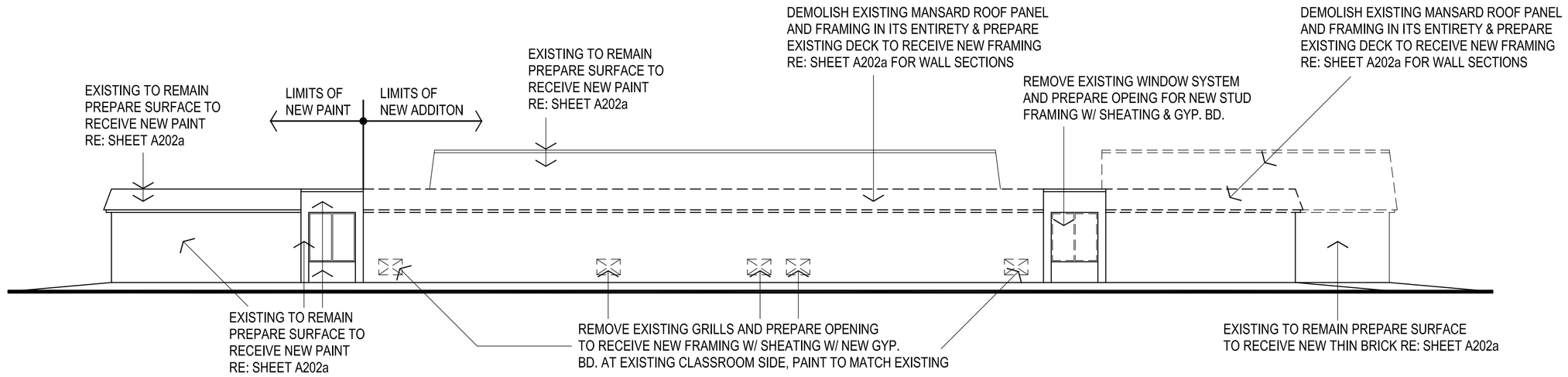

1 SOUTH ELEVATION

3/32" = 1'-0"

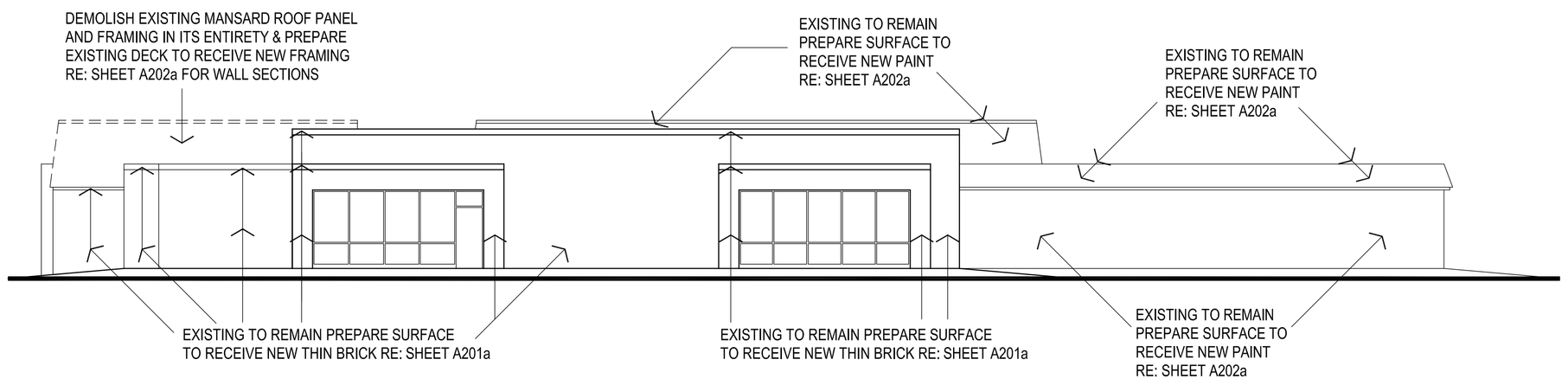

2 NORTH ELEVATION

3/32" = 1'-0"

AGP
the Abla Griffin Partnership L.L.C.
201 N. BROADWAY
SUITE 210
MOORE, OK. 73160
405.735.3477
AGP@theAGP.net
www.theAGP.net

CEDAR CREEK
CIVIL

KFC ENGINEERING
STRUCTURAL

SALAS O'BRIEN
MECHANICAL / ELECTRICAL

STATE OF OKLAHOMA
MICHAEL L. ABLA
2639
REGISTERED ARCHITECT
OKLAHOMA CITY, OKLAHOMA
7/31/23

CG
drawn by

MA
checked by

JULY 2023
date

revisions

MOORE PUBLIC SCHOOLS
BOARD OF EDUCATION
MOORE, OKLAHOMA

MOORE Public Schools
LEARNING FOR LIFE

CLASSROOM ADDITION
HIGHLAND WEST
JUNIOR HIGH SCHOOL

sheet no:

A202

ELEVATIONS

OWNERSHIP USE OF DOCUMENTS:

AGP EXPRESSLY RESERVES ITS COPYRIGHT AND OTHER PROPERTY RIGHTS OF ALL PLANS AND DRAWINGS DESIGNED AND/OR PRODUCED. PLANS AND DRAWINGS ARE NOT TO BE REPRODUCED IN ANY FORM OR MANNER WITHOUT THE EXPRESSED WRITTEN CONSENT OF AGP.

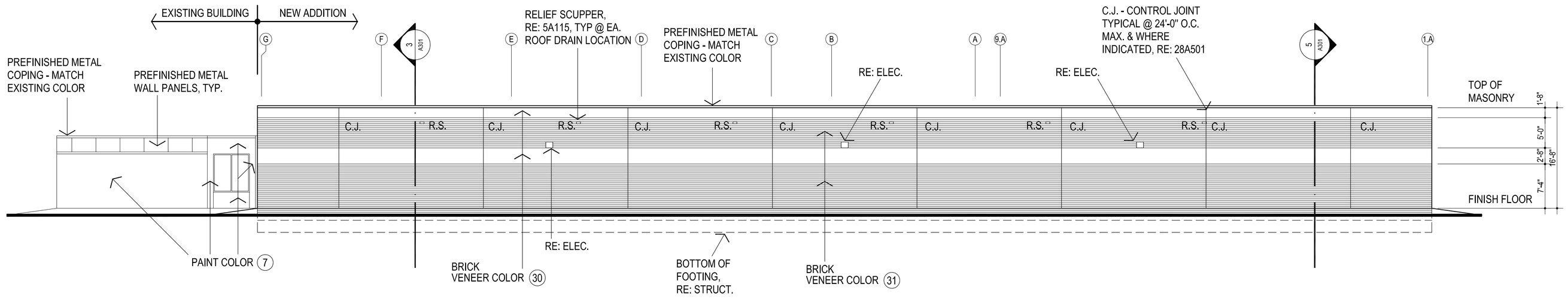

1 SOUTH ELEVATION

3/32" = 1'-0"

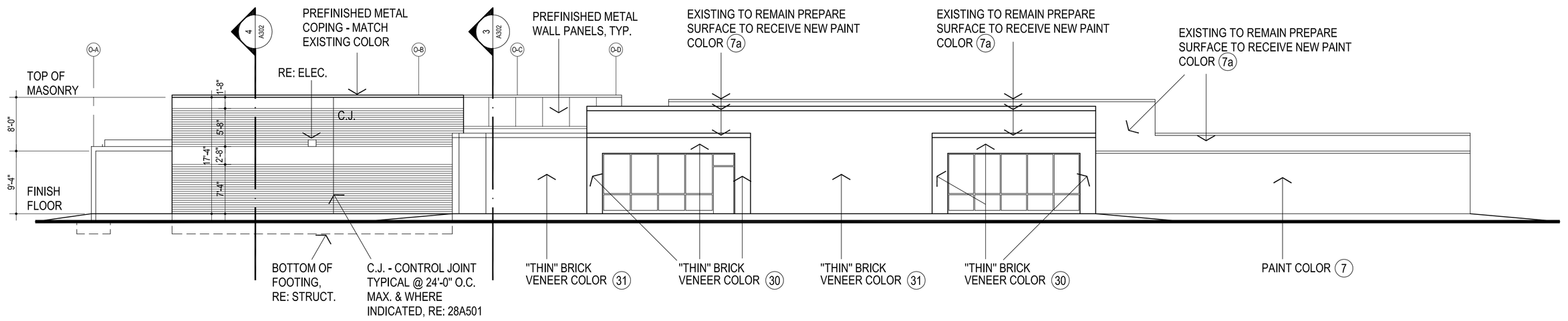

2 NORTH ELEVATION - OFFICE

3/32" = 1'-0"

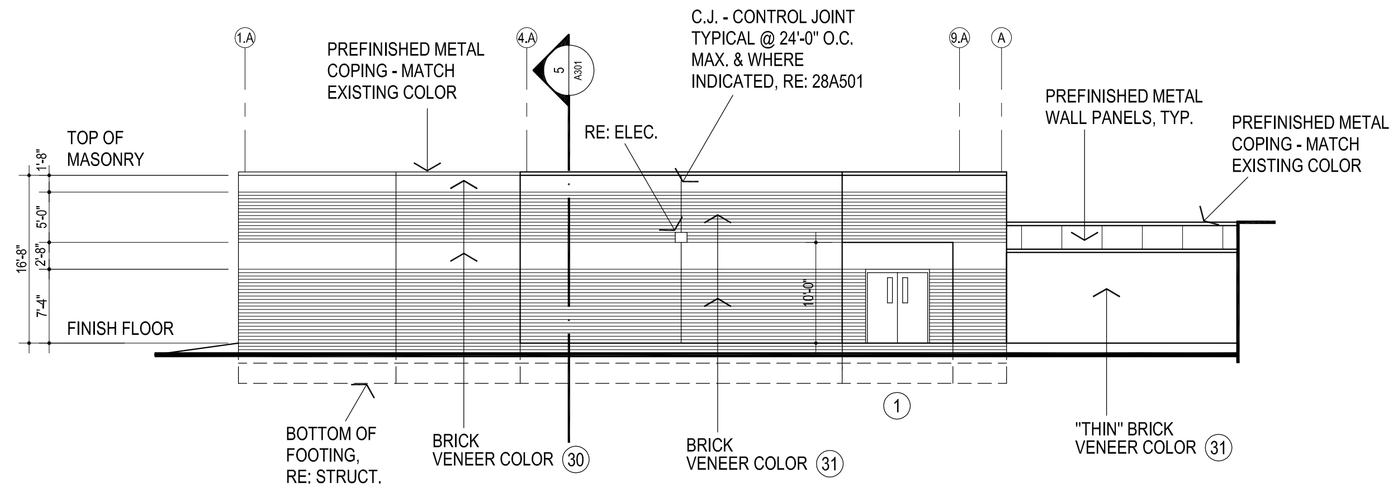

3 NORTH ELEVATION - CLASSROOM

3/32" = 1'-0"

AGP
the Abla Griffin Partnership L.L.C.
201 N. BROADWAY
SUITE 210
MOORE, OK. 73160
405.735.3477
AGP@theAGP.net
www.theAGP.net

CEDAR CREEK
CIVIL

KFC ENGINEERING
STRUCTURAL

SALAS O'BRIEN
MECHANICAL / ELECTRICAL

STATE OF OKLAHOMA
MICHAEL L. ABLA
2639
REGISTERED ARCHITECT
7/31/23

CG
drawn by

MA
checked by

JULY 2023
date

revisions

MOORE PUBLIC SCHOOLS
BOARD OF EDUCATION
MOORE, OKLAHOMA

MOORE Public Schools
LEARNING FOR LIFE

CLASSROOM ADDITION
HIGHLAND WEST
JUNIOR HIGH SCHOOL

sheet no:

A202 a

ELEVATIONS

OWNERSHIP USE OF DOCUMENTS:

AGP EXPRESSLY RESERVES ITS COPYRIGHT AND OTHER PROPERTY RIGHTS OF ALL PLANS AND DRAWINGS DESIGNED AND/OR PRODUCED. PLANS AND DRAWINGS ARE NOT TO BE REPRODUCED IN ANY FORM OR MANNER WITHOUT THE EXPRESSED WRITTEN CONSENT OF AGP.

ALTERNATE #1

GENERAL NOTE:

1. PAINT ALL EXISTING H.M. DOORS & FRAMES COLOR (4)
2. PAINT ALL EXISTING WINDOW FRAMES COLOR (4)

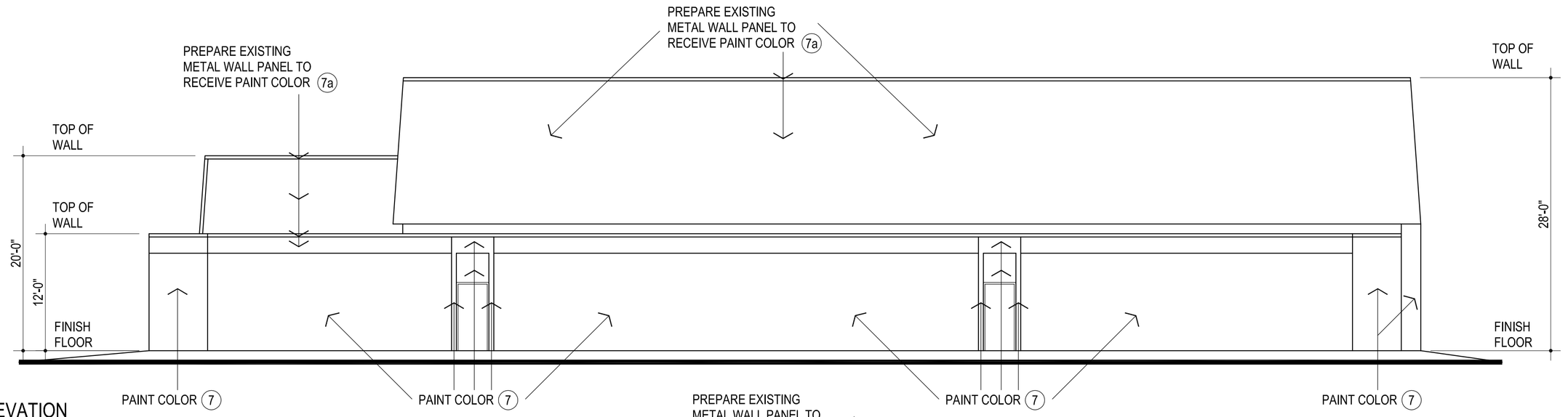

1 NORTH ELEVATION

1/8" = 1'-0"

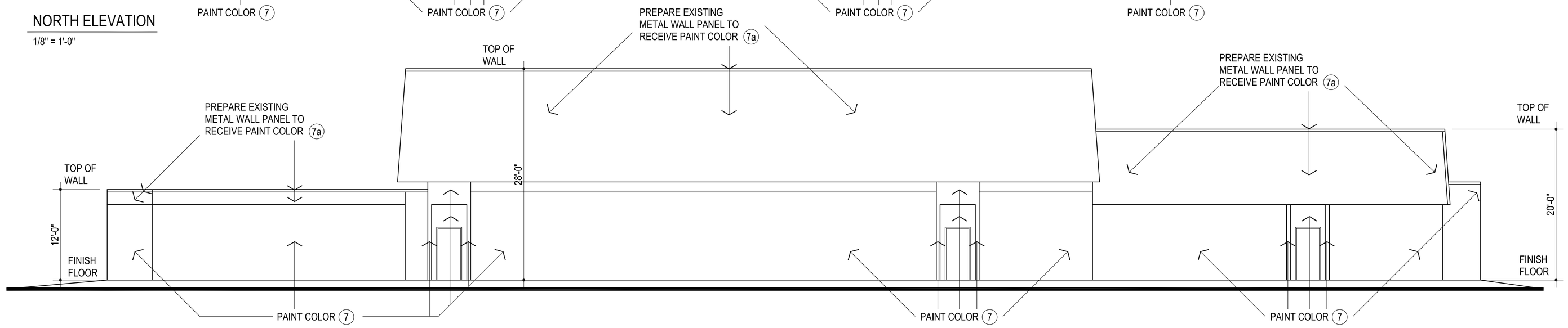

2 WEST ELEVATION

1/8" = 1'-0"

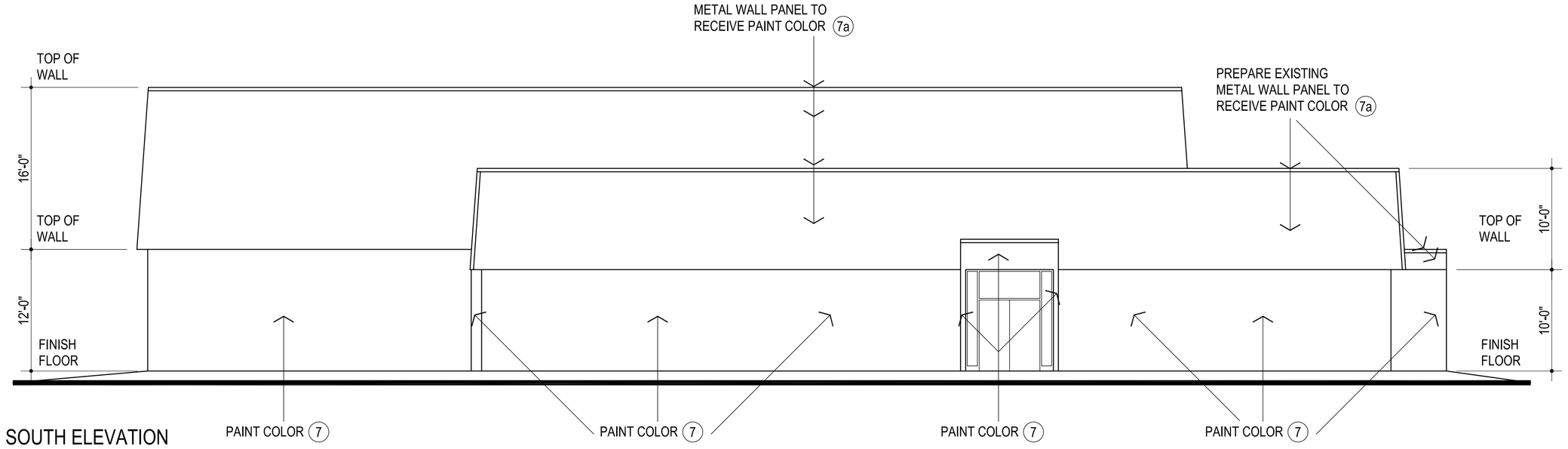

3 SOUTH ELEVATION

1/8" = 1'-0"

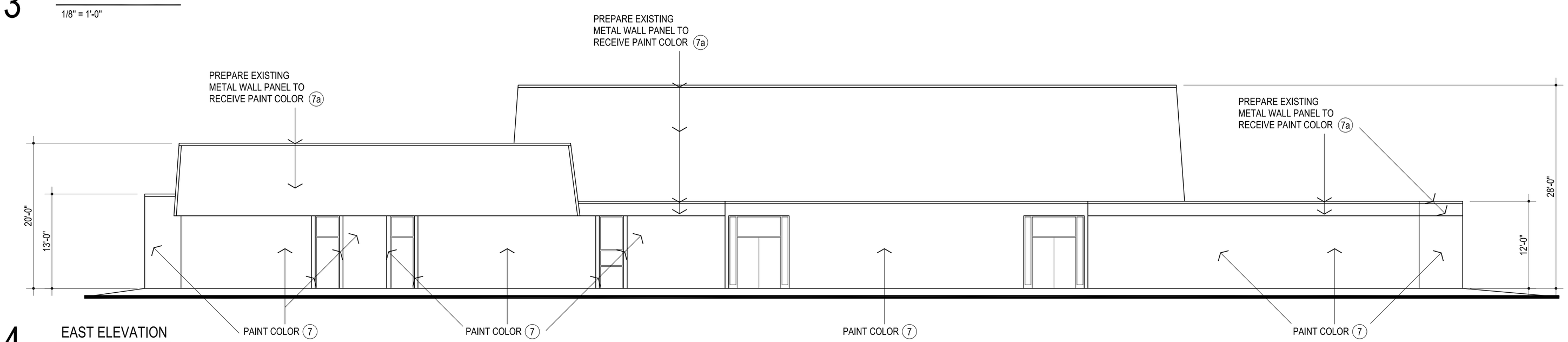

4 EAST ELEVATION

1/8" = 1'-0"

AGP
the Abla Griffin Partnership L.L.C.

201 N. BROADWAY
SUITE 210
MOORE, OK. 73160
405.735.3477
AGP@theAGP.net
www.theAGP.net

CEDAR CREEK
CIVIL

KFC ENGINEERING
STRUCTURAL

SALAS O'BRIEN
MECHANICAL / ELECTRICAL

STATE OF OKLAHOMA
MICHAEL L. ABLA
2639
OKLAHOMA CITY, OKLAHOMA
REGISTERED ARCHITECT

7/31/23

CG
drawn by

MA
checked by

JULY 2023
date

revisions

MOORE PUBLIC SCHOOLS
BOARD OF EDUCATION
MOORE, OKLAHOMA

MOORE Public Schools
LEARNING FOR LIFE

CLASSROOM ADDITION
HIGHLAND WEST
JUNIOR HIGH SCHOOL

sheet no:

A203

ELEVATIONS

OWNERSHIP USE OF DOCUMENTS:

AGP EXPRESSLY RESERVES ITS COPYRIGHT AND OTHER PROPERTY RIGHTS OF ALL PLANS AND DRAWINGS DESIGNED AND/OR PRODUCED. PLANS AND DRAWINGS ARE NOT TO BE REPRODUCED IN ANY FORM OR MANNER WITHOUT THE EXPRESSED WRITTEN CONSENT OF AGP.

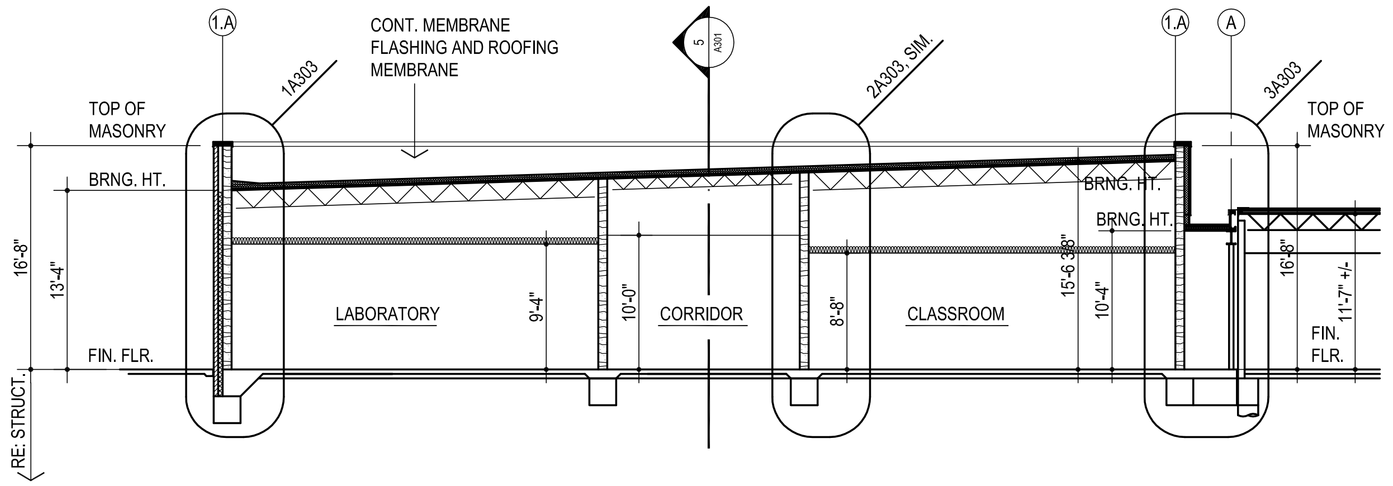

1 BUILDING SECTION

1/8" = 1'-0"

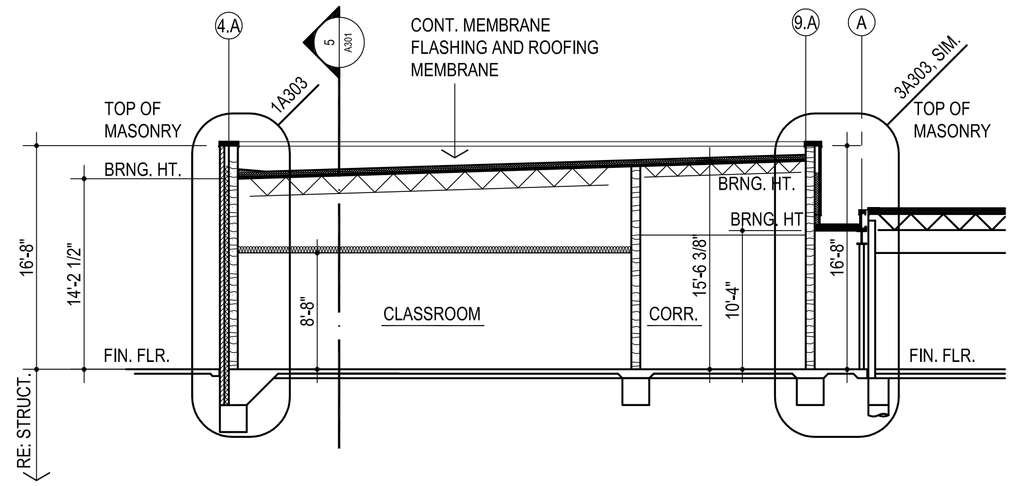

2 BUILDING SECTION

1/8" = 1'-0"

REFER STRUCTURAL DRAWINGS FOR TOP OF FOOTING ELEVATIONS - PROVIDE ALL MATERIALS REQUIRED FOR WALL SYSTEM TO EXTEND TO TOP OF FOOTING

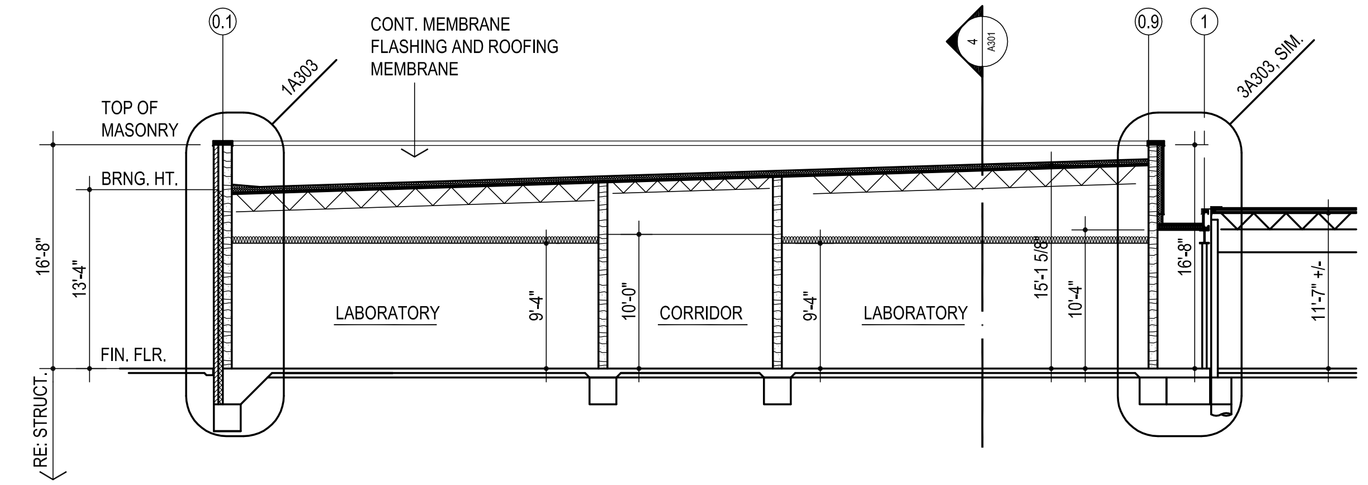

3 BUILDING SECTION

1/8" = 1'-0"

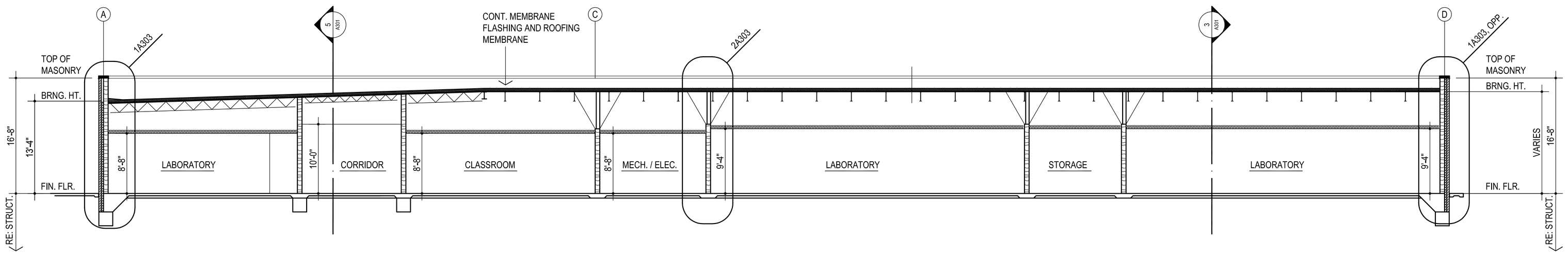

4 BUILDING SECTION

1/8" = 1'-0"

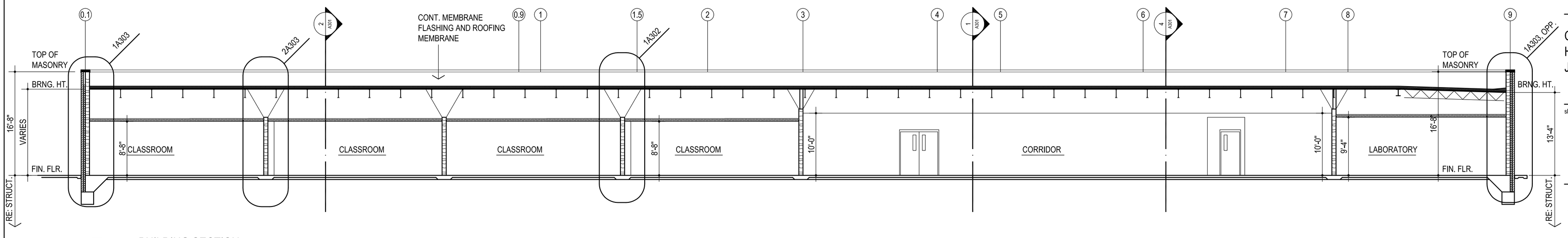

5 BUILDING SECTION

1/8" = 1'-0"

AGP
the Abla Griffin Partnership L.L.C.
201 N. BROADWAY
SUITE 210
MOORE, OK. 73160
405.735.3477
AGP@theAGP.net
www.theAGP.net

CEDAR CREEK
CIVIL

KFC ENGINEERING
STRUCTURAL

SALAS O'BRIEN
MECHANICAL / ELECTRICAL

STATE OF OKLAHOMA
MICHAEL L. ABLA
2639
REGISTERED ARCHITECT
7/31/23

CG
drawn by

MA
checked by

JULY 2023
date

revisions

MOORE PUBLIC SCHOOLS
BOARD OF EDUCATION
MOORE, OKLAHOMA

MOORE Public Schools
LEARNING FOR LIFE

CLASSROOM ADDITION
HIGHLAND WEST
JUNIOR HIGH SCHOOL

sheet no:

A301

BUILDING SECTIONS

OWNERSHIP USE OF DOCUMENTS:

AGP EXPRESSLY RESERVES ITS COPYRIGHT AND OTHER PROPERTY RIGHTS OF ALL PLANS AND DRAWINGS DESIGNED AND/OR PRODUCED. PLANS AND DRAWINGS ARE NOT TO BE REPRODUCED IN ANY FORM OR MANNER WITHOUT THE EXPRESSED WRITTEN CONSENT OF AGP.

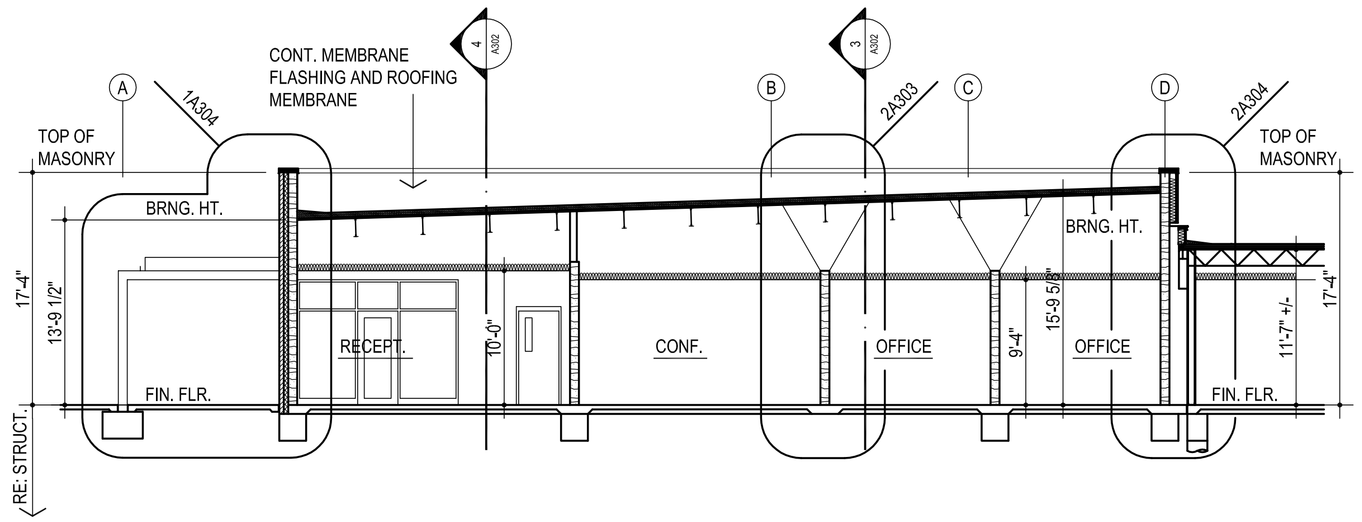

1 BUILDING SECTION

1/8" = 1'-0"

REFER STRUCTURAL DRAWINGS FOR TOP OF FOOTING ELEVATIONS - PROVIDE ALL MATERIALS REQUIRED FOR WALL SYSTEM TO EXTEND TO TOP OF FOOTING

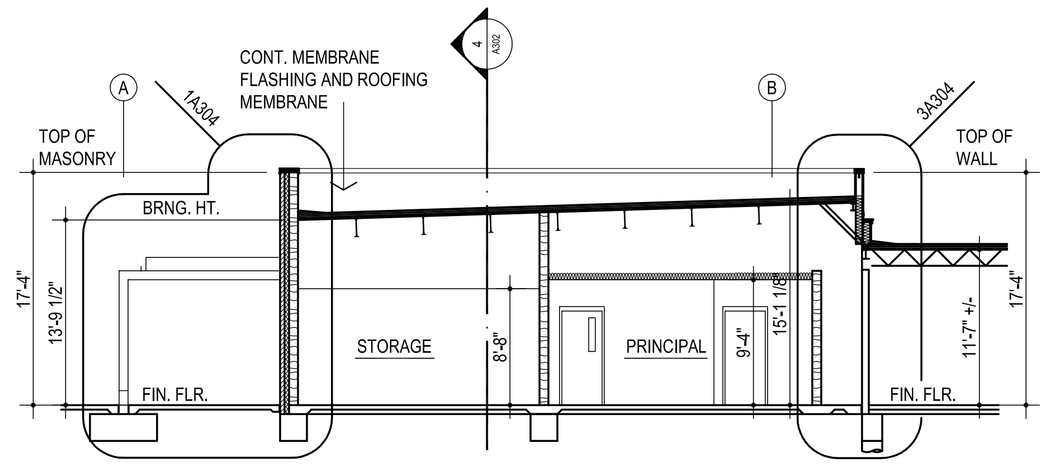

2 BUILDING SECTION

1/8" = 1'-0"

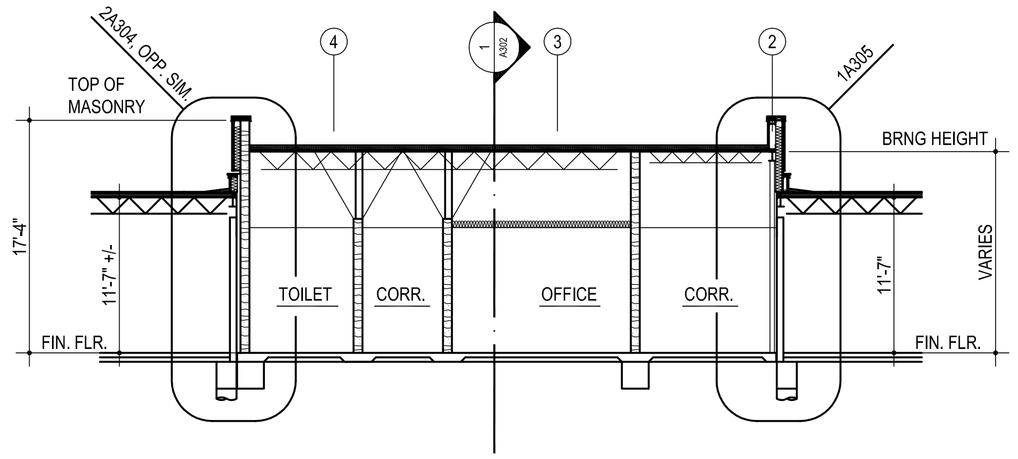

3 BUILDING SECTION

1/8" = 1'-0"

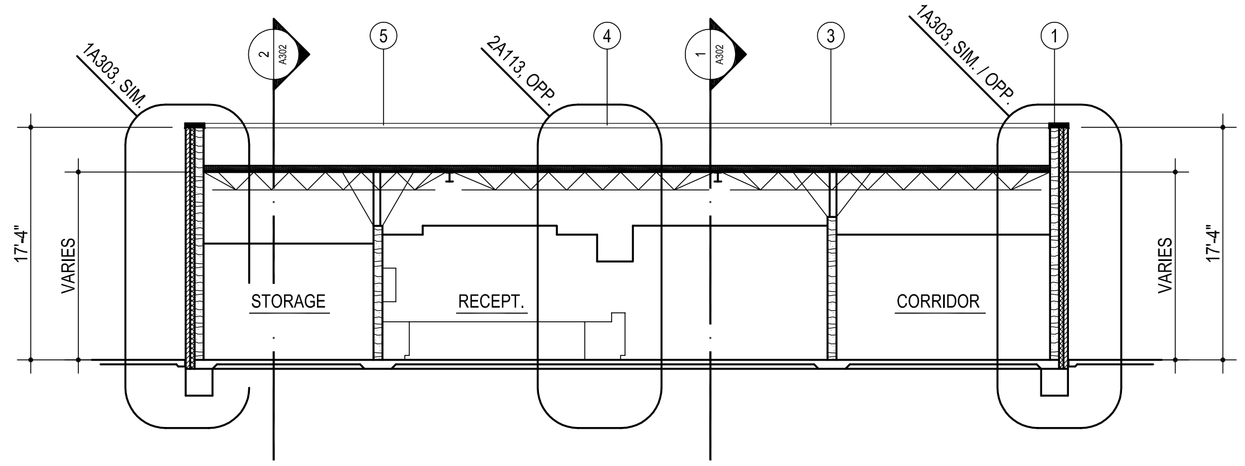

4 BUILDING SECTION

1/8" = 1'-0"

AGP
the Abla Griffin Partnership L.L.C.
201 N. BROADWAY
SUITE 210
MOORE, OK. 73160
405.735.3477
AGP@theAGP.net
www.theAGP.net

CEDAR CREEK
CIVIL

KFC ENGINEERING
STRUCTURAL

SALAS O'BRIEN
MECHANICAL / ELECTRICAL

STATE OF OKLAHOMA
MICHAEL L. ABLA
2639
REGISTERED ARCHITECT
7/31/23

CG
drawn by

MA
checked by

JULY 2023
date

revisions

MOORE PUBLIC SCHOOLS
BOARD OF EDUCATION
MOORE, OKLAHOMA

MOORE Public Schools
LEARNING FOR LIFE

CLASSROOM ADDITION
HIGHLAND WEST
JUNIOR HIGH SCHOOL

sheet no:

A302

BUILDING SECTIONS

OWNERSHIP USE OF DOCUMENTS:

AGP EXPRESSLY RESERVES ITS COPYRIGHT AND OTHER PROPERTY RIGHTS OF ALL PLANS AND DRAWINGS DESIGNED AND/OR PRODUCED. PLANS AND DRAWINGS ARE NOT TO BE REPRODUCED IN ANY FORM OR MANNER WITHOUT THE EXPRESSED WRITTEN CONSENT OF AGP.

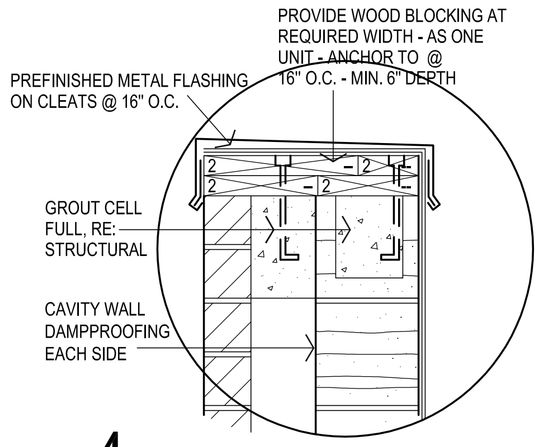

4

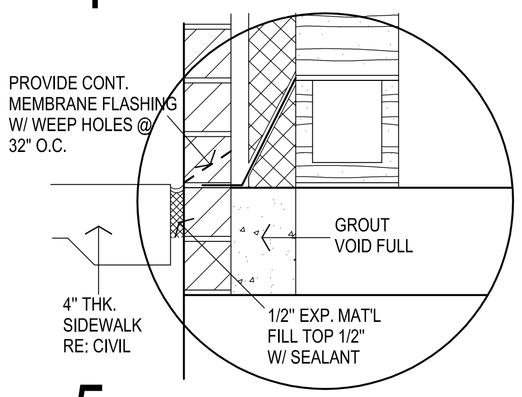

5

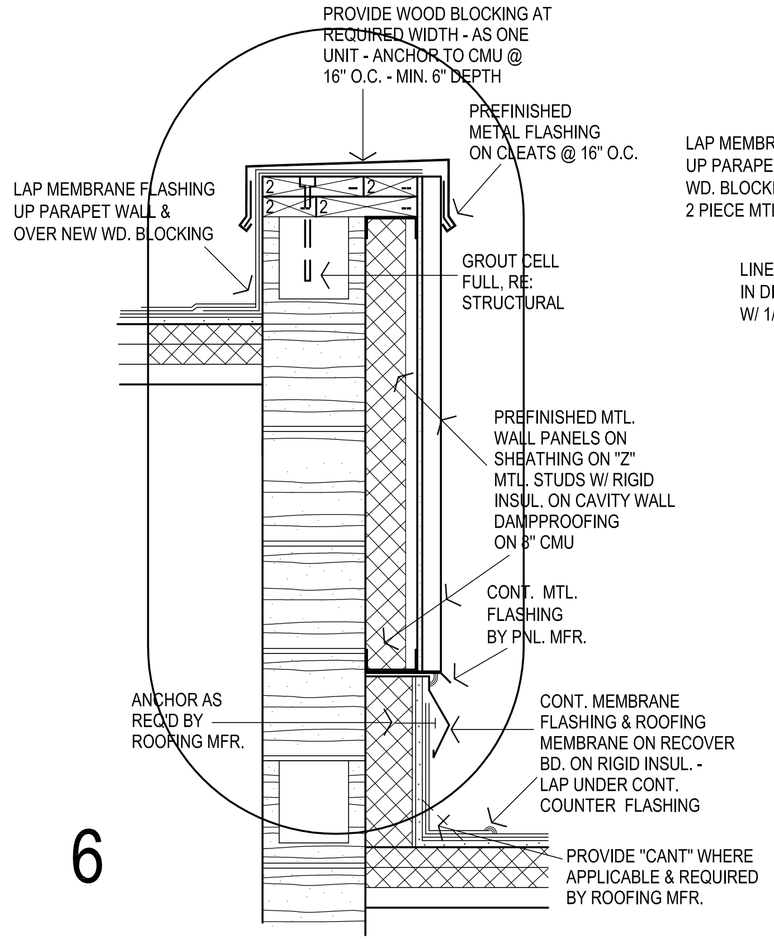

6

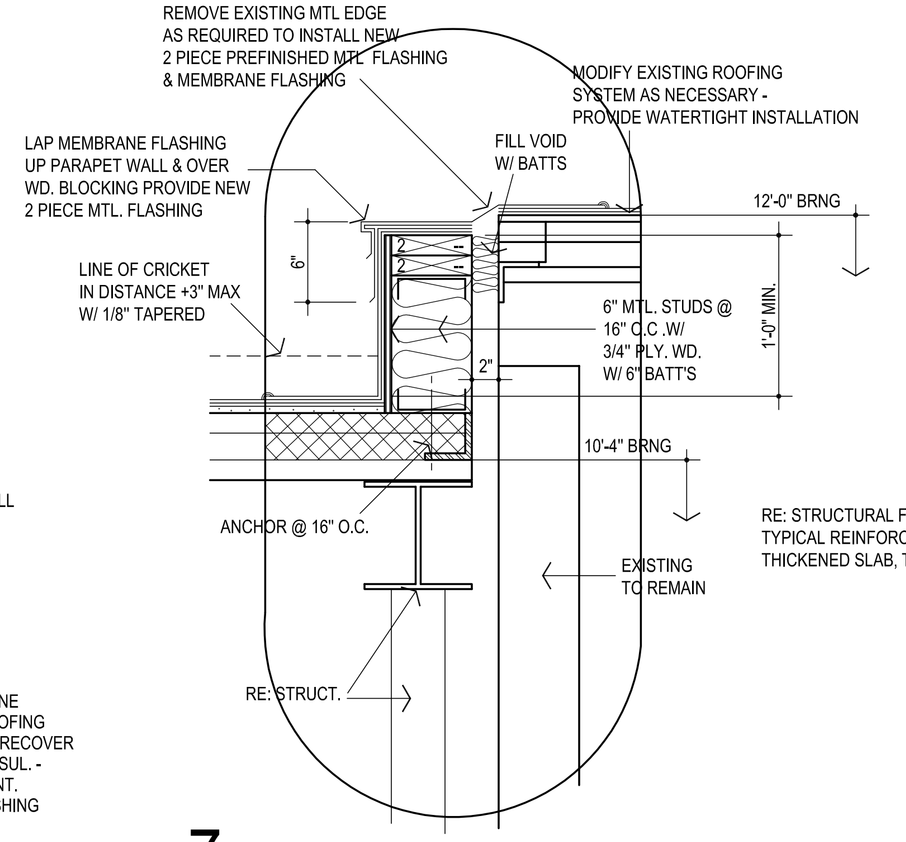

7

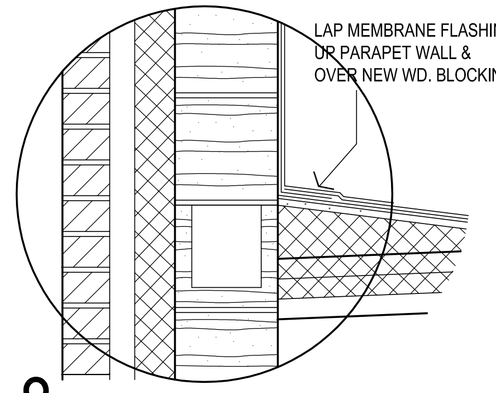

8

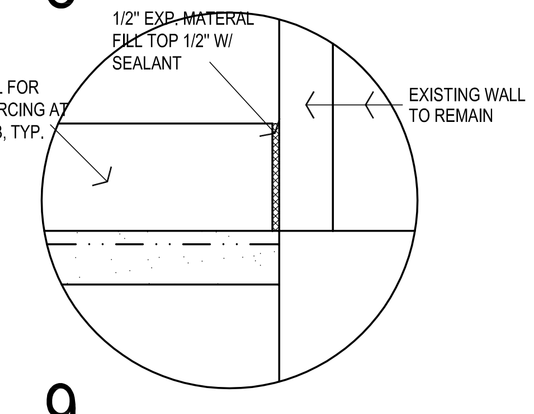

9

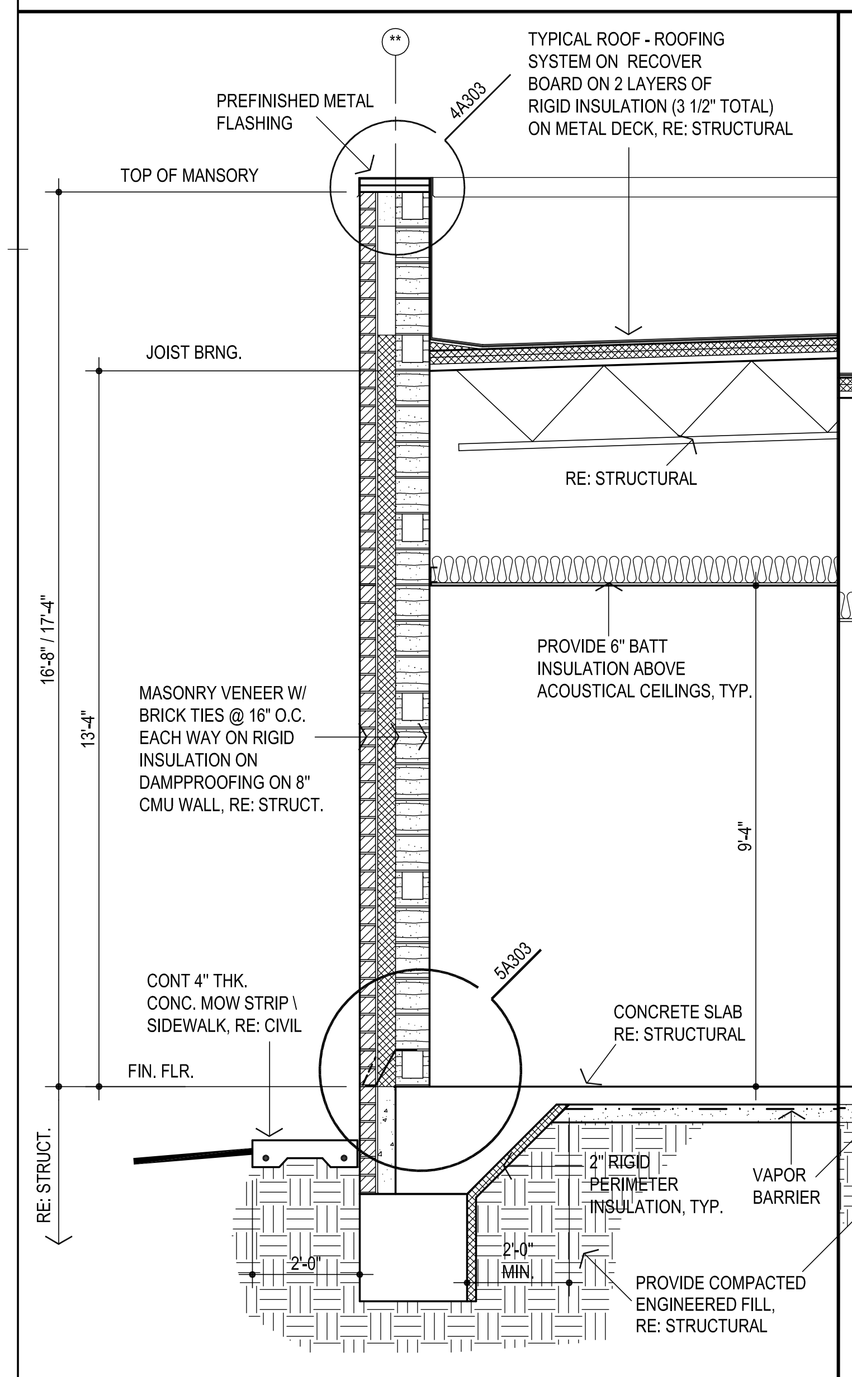

1 WALL SECTION

1/2" = 1'-0"

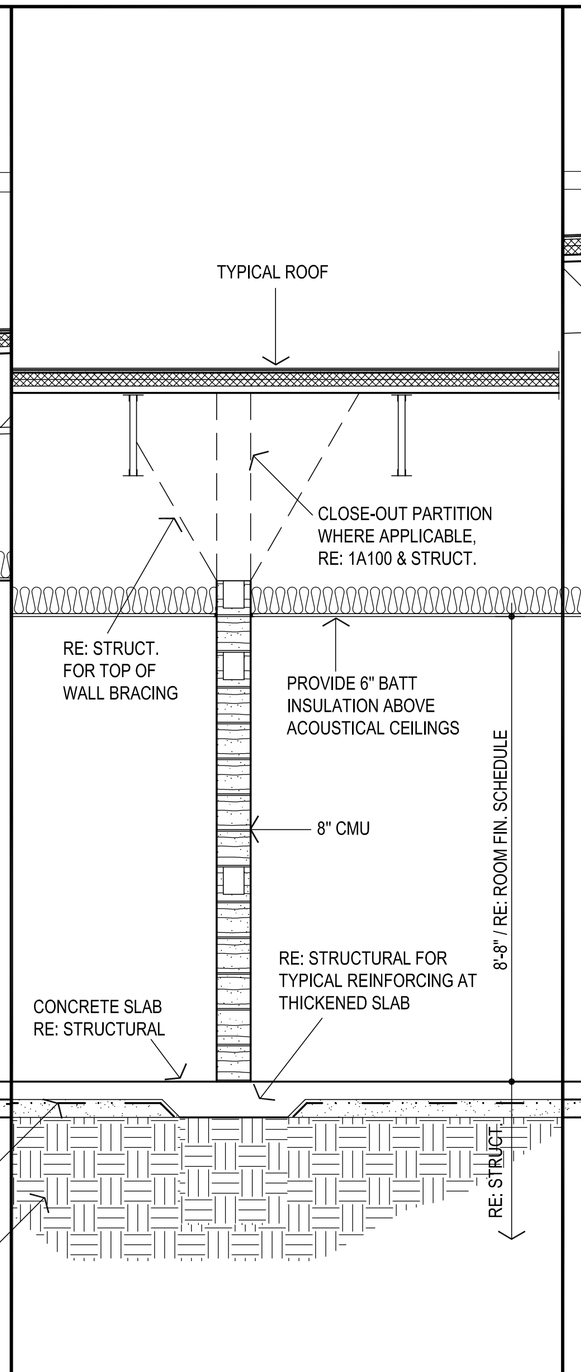

2 WALL SECTION

1/2" = 1'-0"

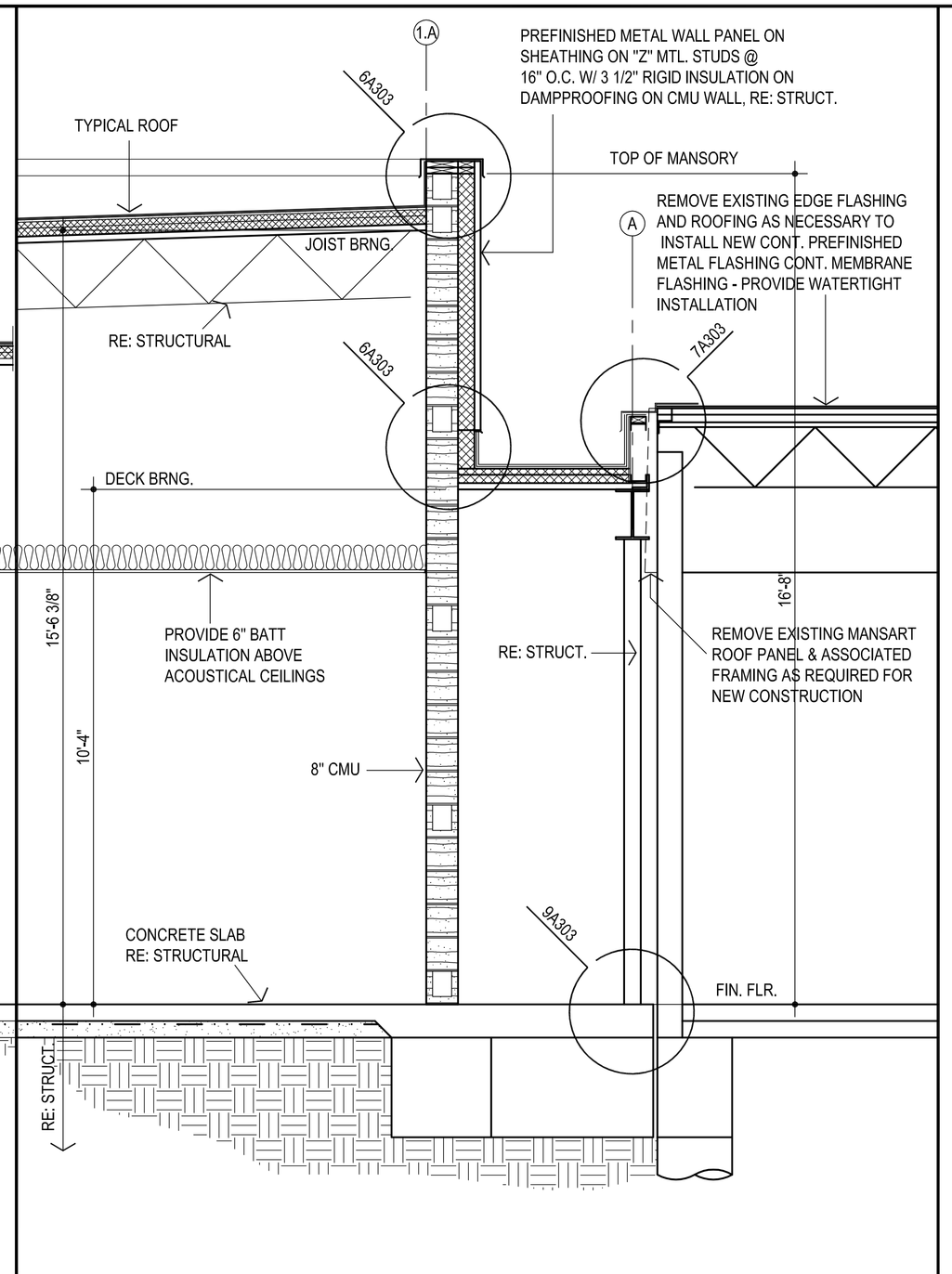

3 WALL SECTION

1/2" = 1'-0"

AGP
the Abla Griffin Partnership L.L.C.
201 N. BROADWAY
SUITE 210
MOORE, OK. 73160
405.735.3477
AGP@theAGP.net
www.theAGP.net

CEDAR CREEK
CIVIL

KFC ENGINEERING
STRUCTURAL

SALAS O'BRIEN
MECHANICAL / ELECTRICAL

STATE OF OKLAHOMA
MICHAEL L. ABLA 2639
OKLAHOMA CITY, OKLAHOMA
LICENSED ARCHITECT
7/31/23

CG
drawn by

MA
checked by

JULY 2023
date

revisions

MOORE PUBLIC SCHOOLS
BOARD OF EDUCATION
MOORE, OKLAHOMA

MOORE Public Schools
LEARNING FOR LIFE

CLASSROOM ADDITION
HIGHLAND WEST
JUNIOR HIGH SCHOOL

sheet no:

A303

WALL SECTIONS

OWNERSHIP USE OF DOCUMENTS:

AGP EXPRESSLY RESERVES ITS COPYRIGHT AND OTHER PROPERTY RIGHTS OF ALL PLANS AND DRAWINGS DESIGNED AND/OR PRODUCED. PLANS AND DRAWINGS ARE NOT TO BE REPRODUCED IN ANY FORM OR MANNER WITHOUT THE EXPRESSED WRITTEN CONSENT OF AGP.

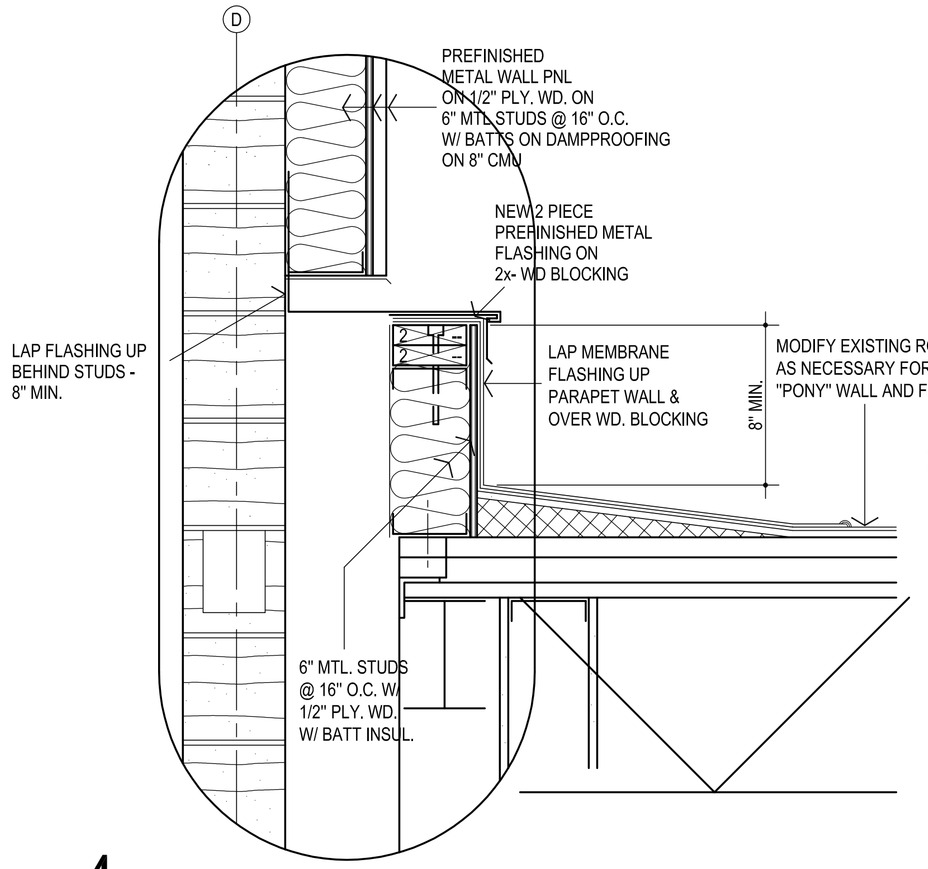

4

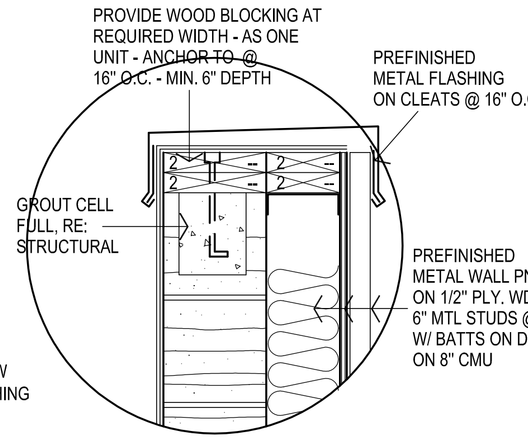

5

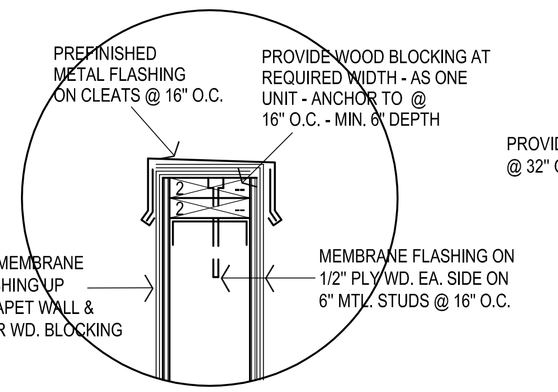

6

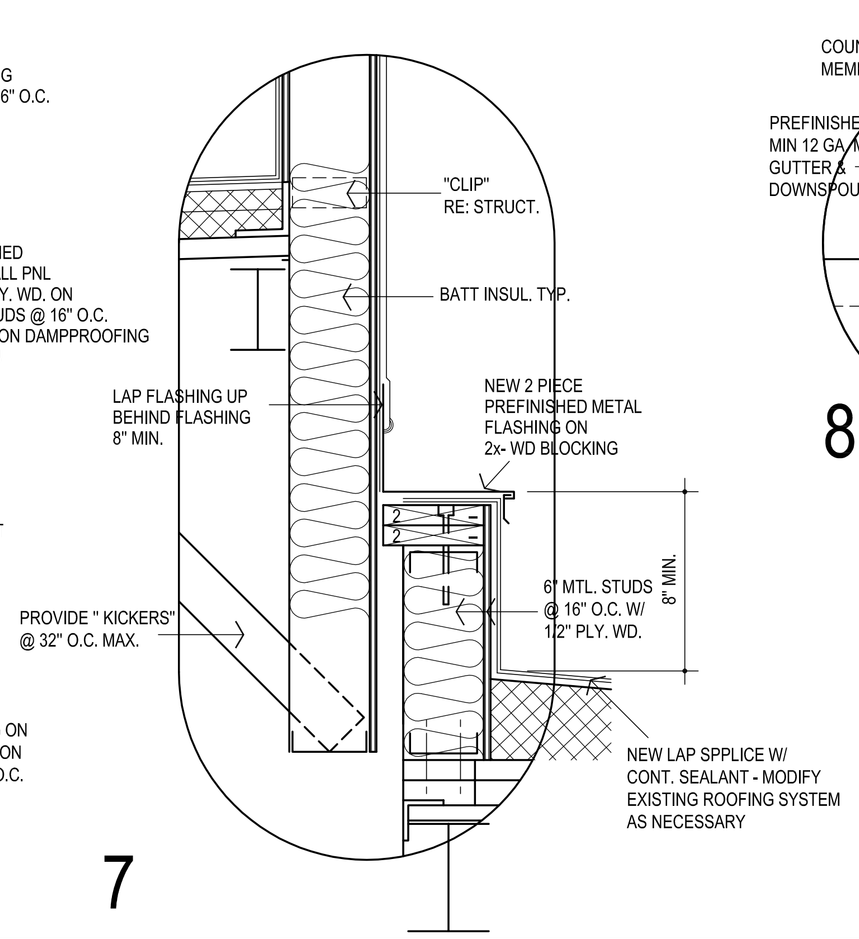

7

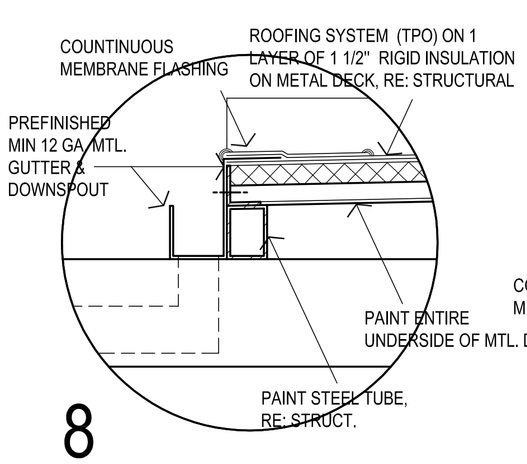

8

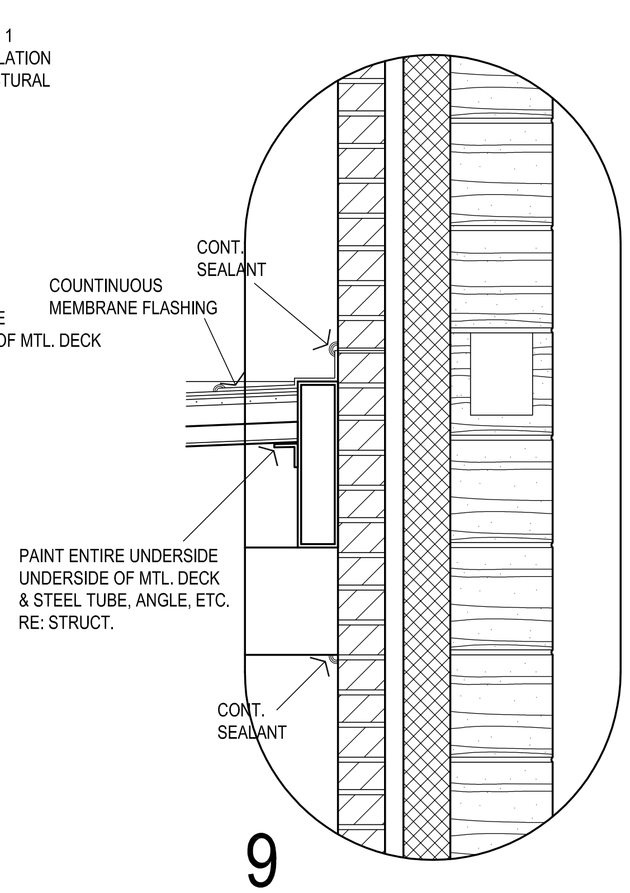

9

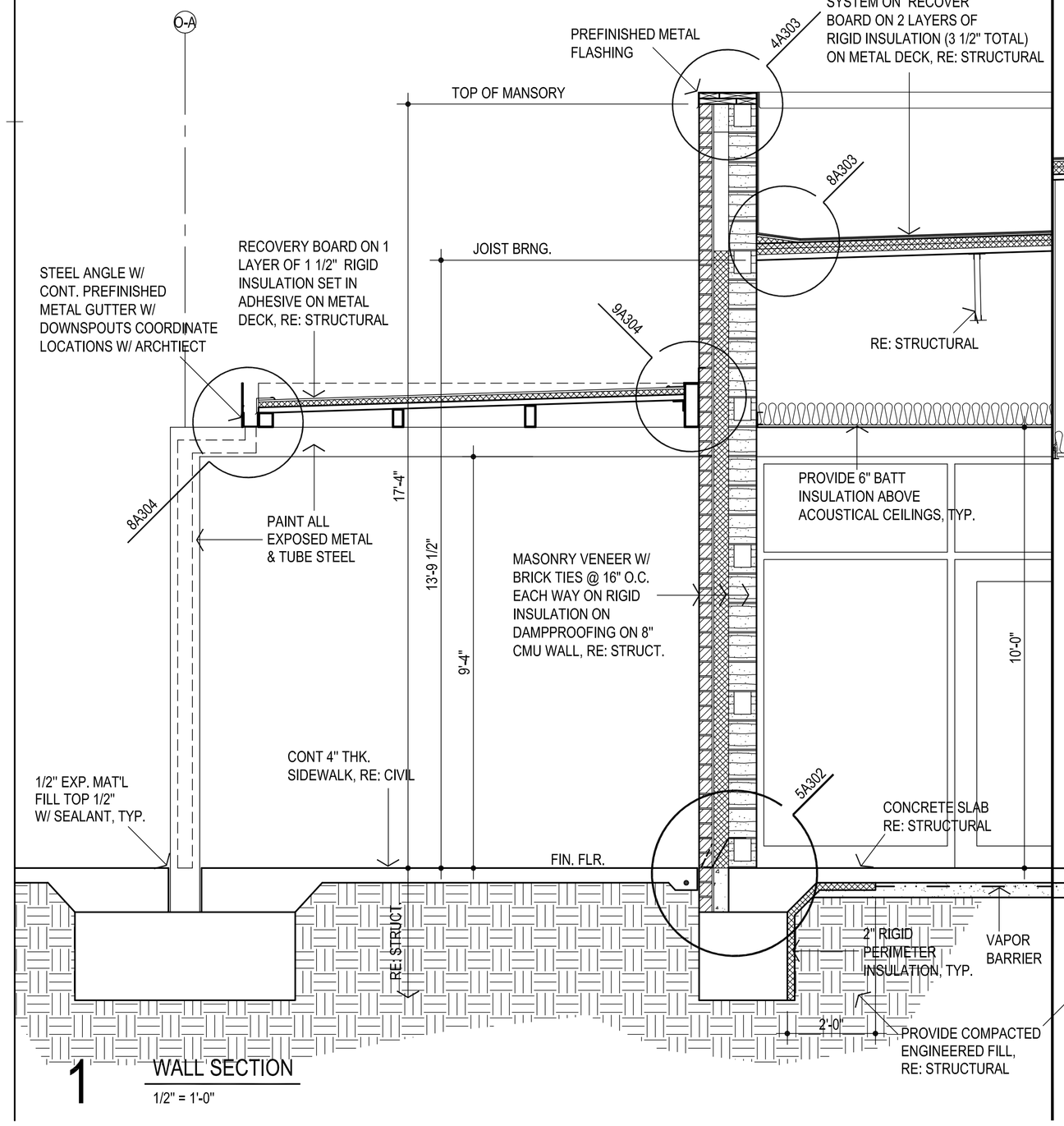

1 WALL SECTION
1/2" = 1'-0"

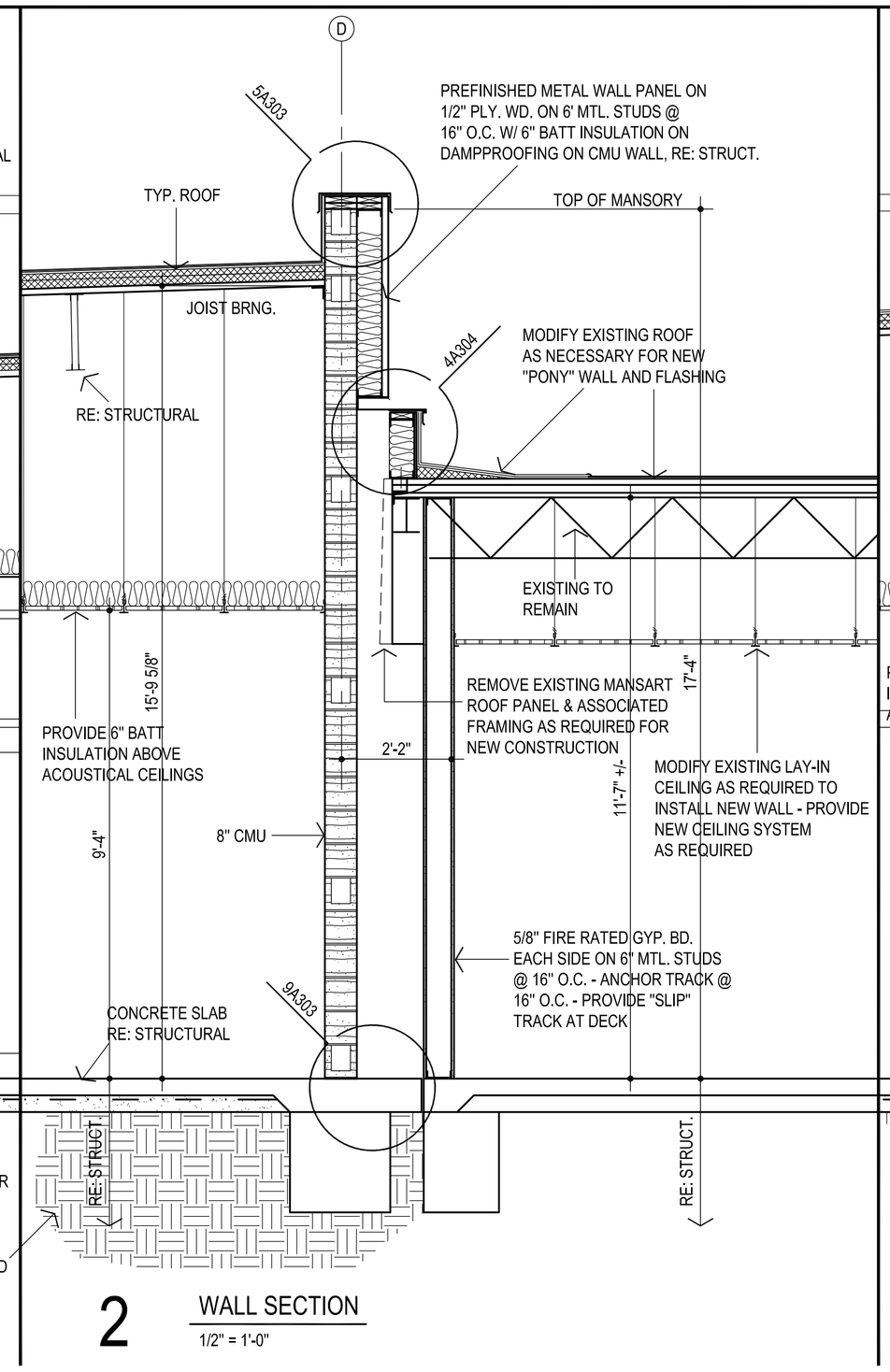

2 WALL SECTION
1/2" = 1'-0"

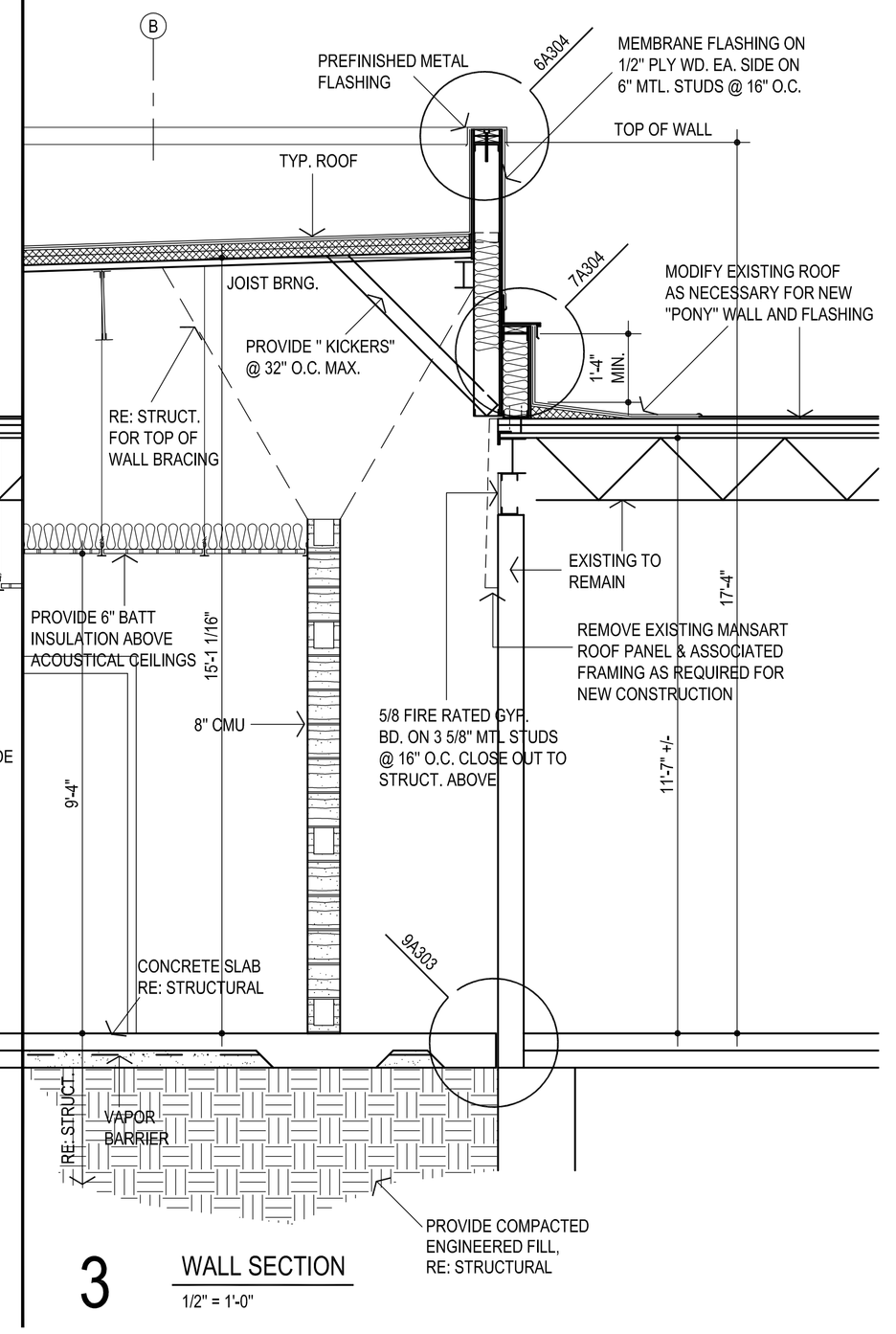

3 WALL SECTION
1/2" = 1'-0"

AGP
the Abla Griffin Partnership L.L.C.
201 N. BROADWAY
SUITE 210
MOORE, OK. 73160
405.735.3477
AGP@theAGP.net
www.theAGP.net

CEDAR CREEK
CIVIL

KFC ENGINEERING
STRUCTURAL

SALAS O'BRIEN
MECHANICAL / ELECTRICAL

STATE OF OKLAHOMA
MICHAEL L. ABLA
2639
OKLAHOMA CITY, OKLAHOMA
REGISTERED ARCHITECT
7/31/23

CG
drawn by

MA
checked by

JULY 2023
date

revisions

MOORE PUBLIC SCHOOLS
BOARD OF EDUCATION
MOORE, OKLAHOMA

MOORE Public Schools
LEARNING FOR LIFE

CLASSROOM ADDITION
HIGHLAND WEST
JUNIOR HIGH SCHOOL

sheet no:

A304

WALL SECTIONS

OWNERSHIP USE OF DOCUMENTS:

AGP EXPRESSLY RESERVES ITS COPYRIGHT AND OTHER PROPERTY RIGHTS OF ALL PLANS AND DRAWINGS DESIGNED AND/OR PRODUCED. PLANS AND DRAWINGS ARE NOT TO BE REPRODUCED IN ANY FORM OR MANNER WITHOUT THE EXPRESSED WRITTEN CONSENT OF AGP.

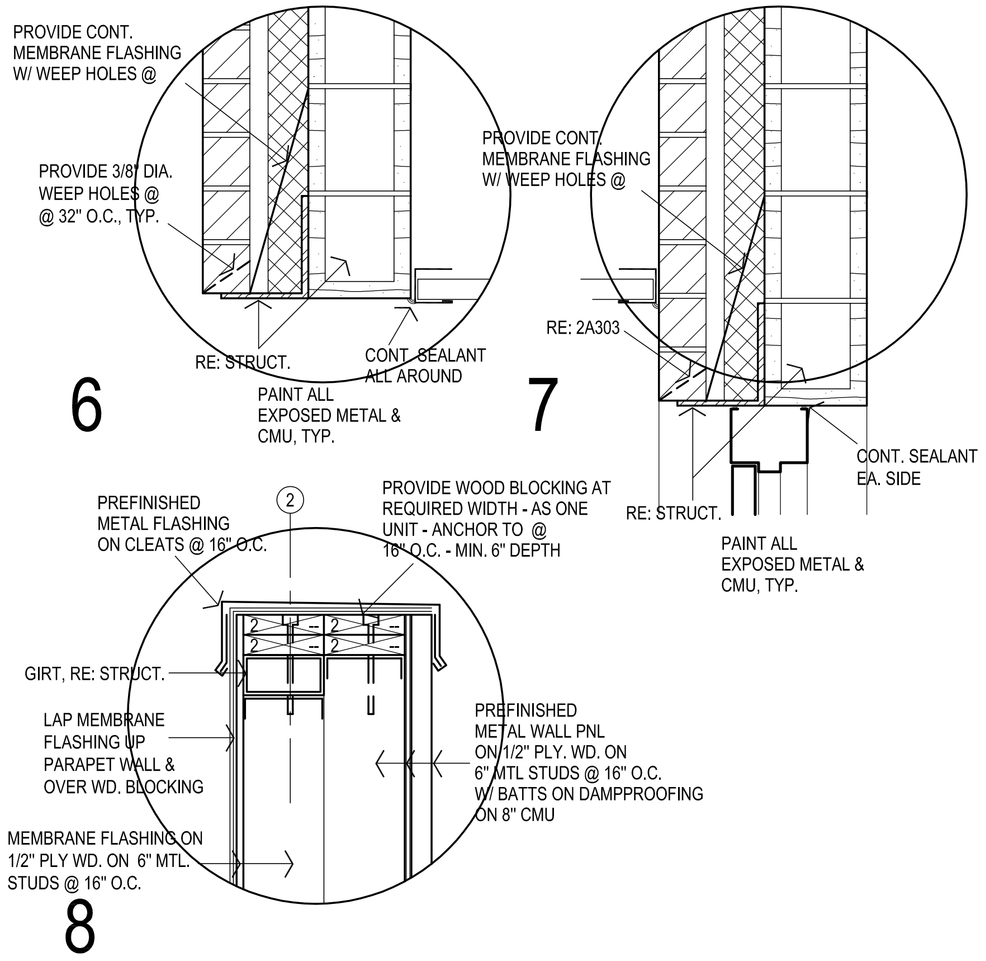

6 7 8

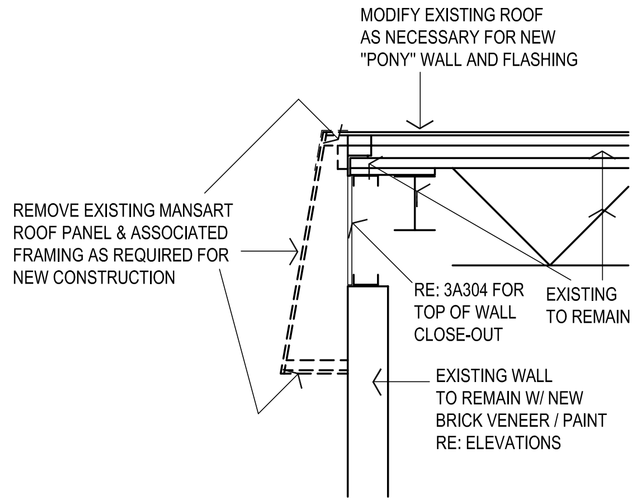

3 EXISTING MANSART SECTION

3/4" = 1'-0"

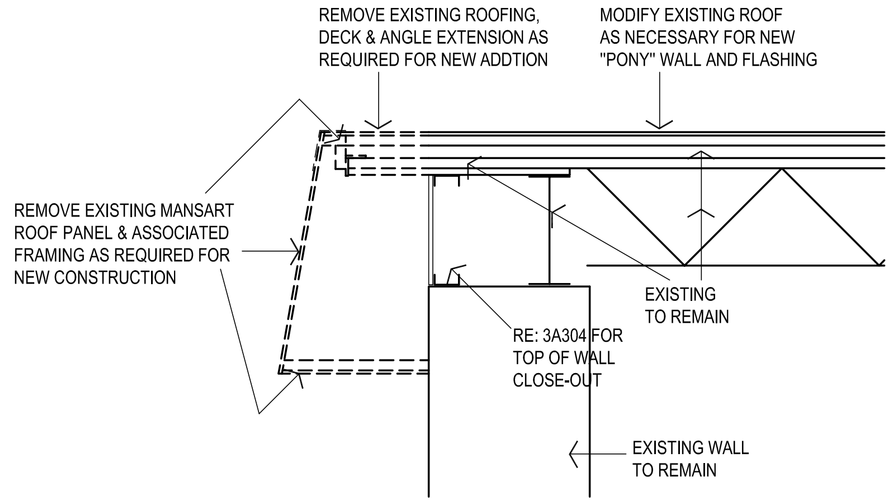

4 EXISTING MANSART SECTION @ EXISTING ENTRY

3/4" = 1'-0"

THIN BRICK SYSTEM DESCRIPTION :

1. @ SHEATING / STUD SUBSTRATES - THIN BRICK VENEER ON MORTAR SCRATCH COAT (1/2" MIN. THICKNESS) ON METAL LATH SECURED W/ 3/4" CORROSIVE-RESISTANT SCREWS @ 6" O.C. ON WEATHER RESISTANT BARRIER ANCHORED @ 6" O.C. MIN.
2. @ CAST-IN-PLACE CONCRETE SUBSTRATES - THIN BRICK VENEER ON BONDING COAT ON MORTAR / SCRATCH COAT W/ METAL LATH ON AIR / VAPOR BARRIER
3. PROVIDE CONT. WEEP SCREED @ BASE OF WALLS. LAP AIR / VAPOR BARRIER OVER TOP OF SCREED 1" MIN.
4. COORDINATE ALL SUBSTRATE PREPARATIONS W/ THIN BRICK VENEER MFR. & MASON. REVISE AS NECESSARY & APPROVED BY ARCHITECT.

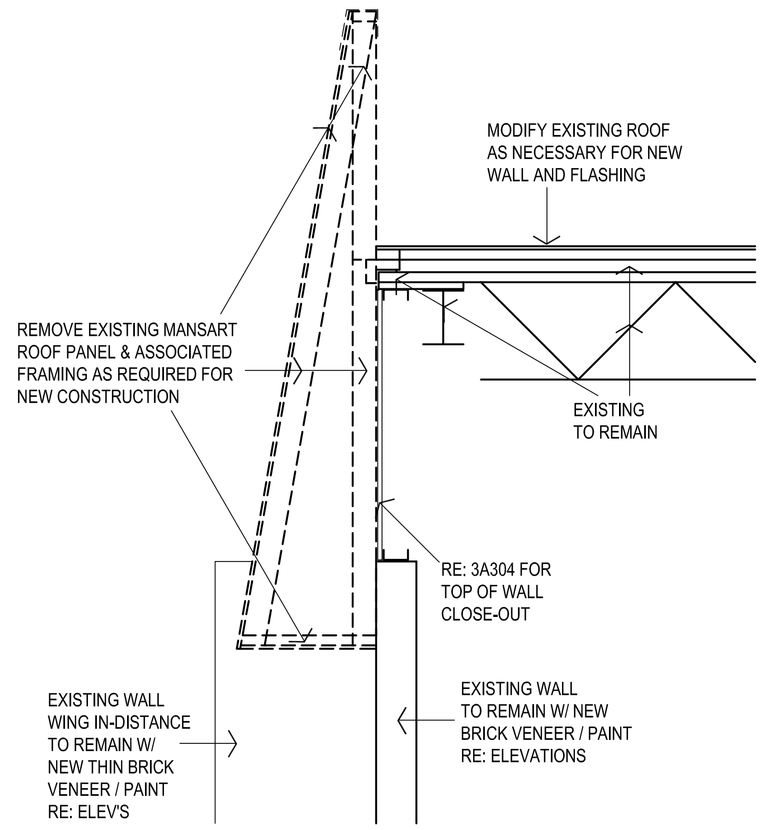

5 EXISTING MANSART SECTION

3/4" = 1'-0"

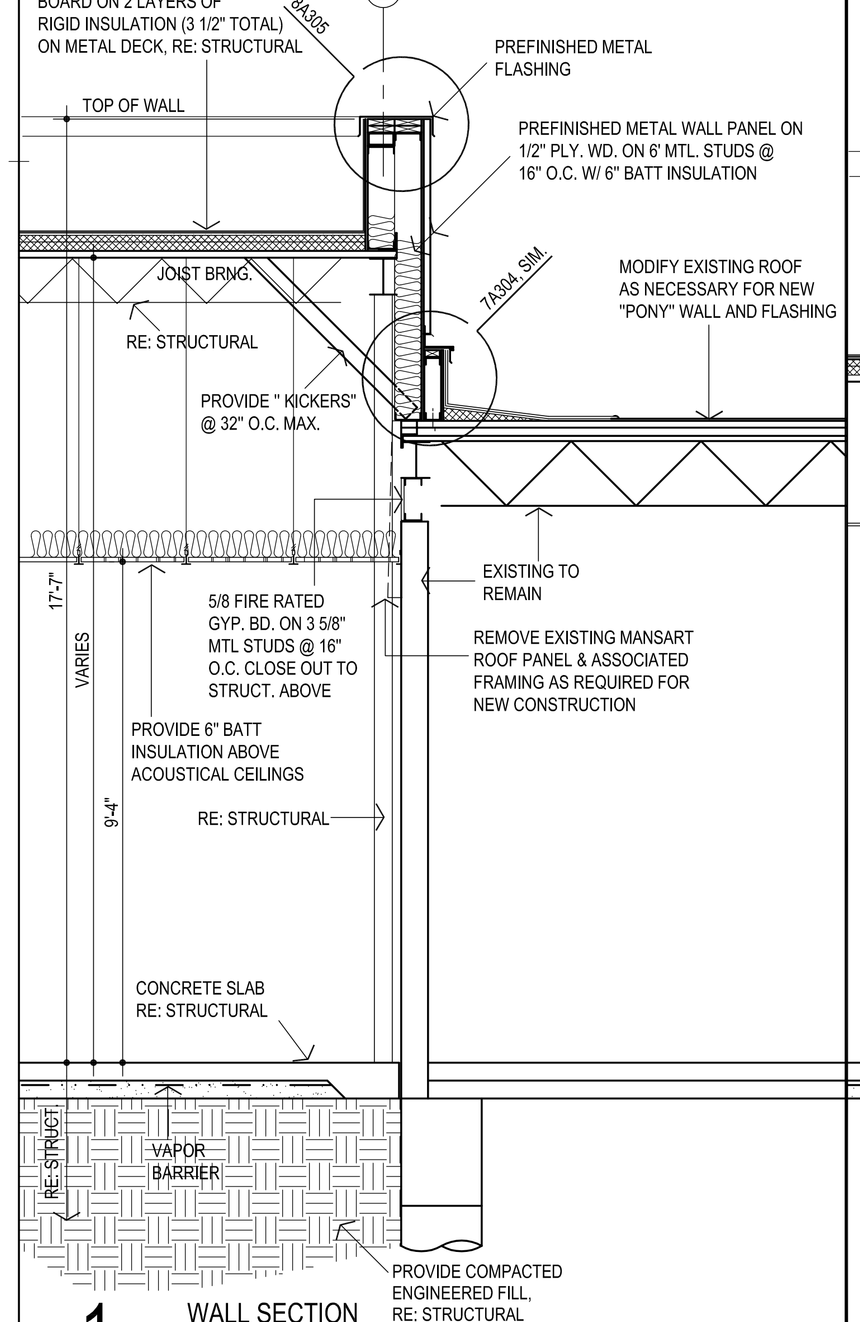

1 WALL SECTION

1/2" = 1'-0"

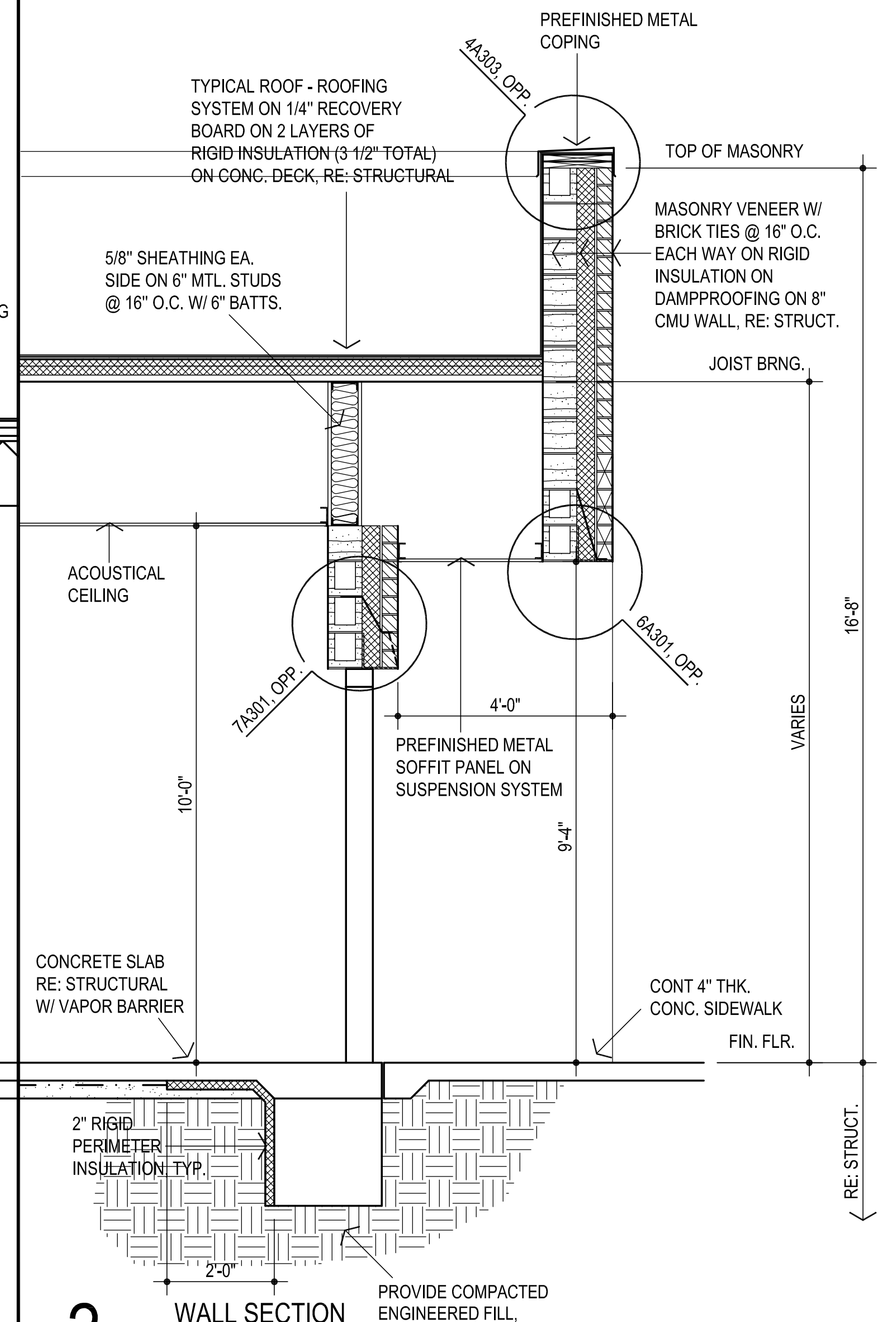

2 WALL SECTION

1/2" = 1'-0"

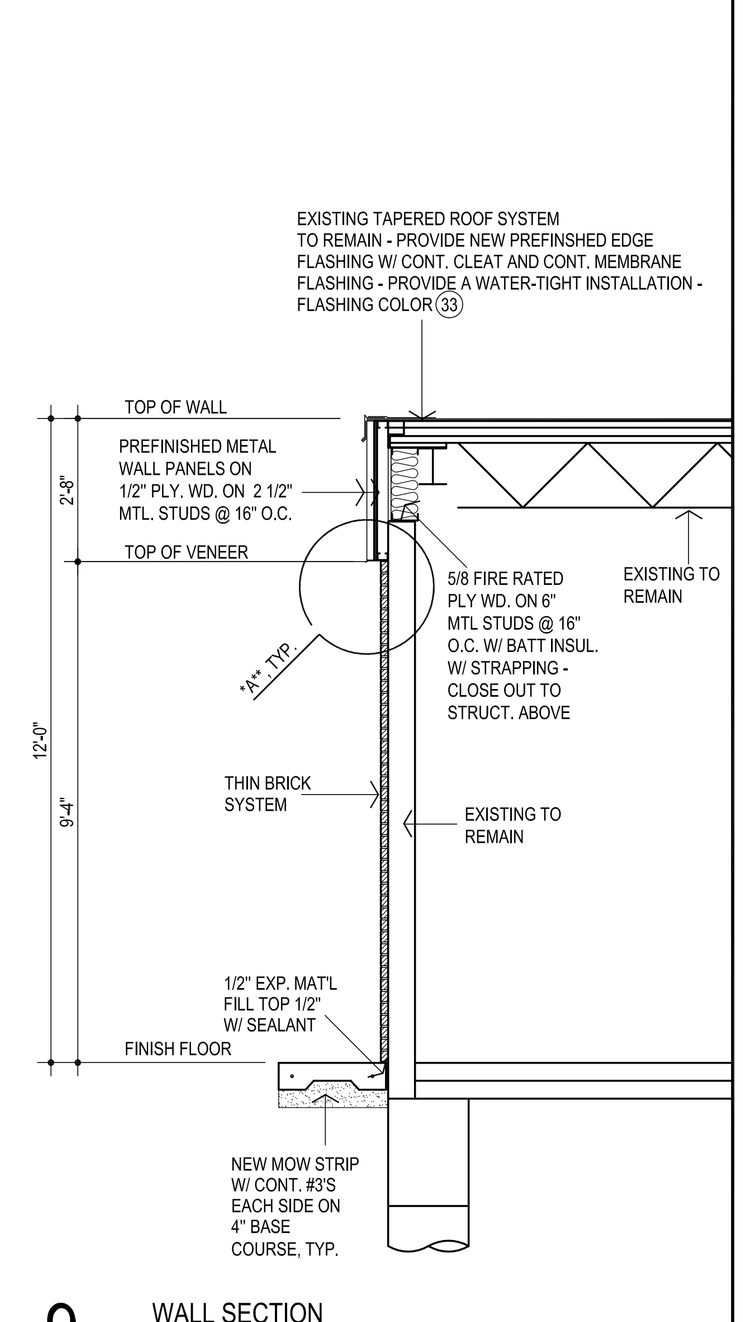

9 WALL SECTION

1/2" = 1'-0"

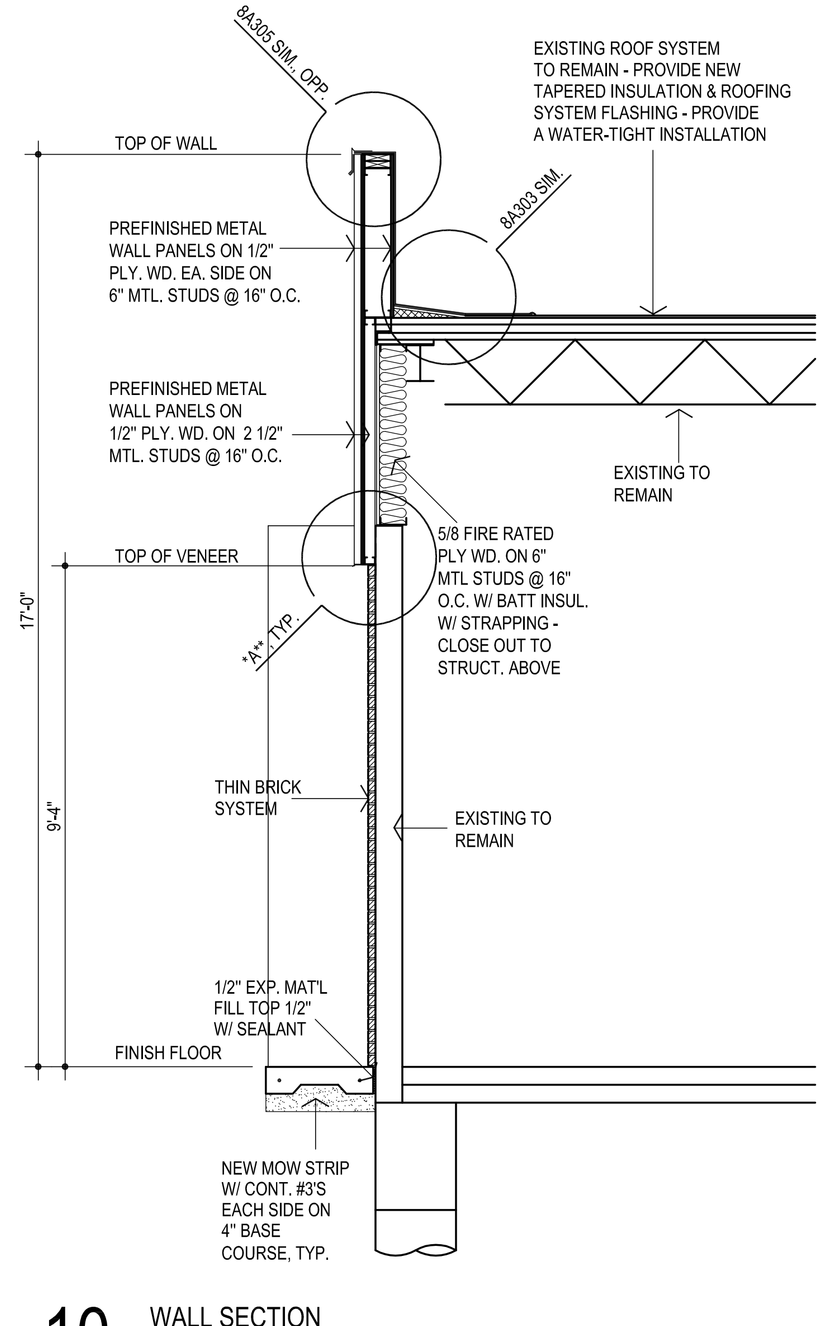

10 WALL SECTION

1/2" = 1'-0"

AGP
the Abla Griffin Partnership L.L.C.
201 N. BROADWAY
SUITE 210
MOORE, OK. 73160
405.735.3477
AGP@theAGP.net
www.theAGP.net

CEDAR CREEK
CIVIL

KFC ENGINEERING
STRUCTURAL

SALAS O'BRIEN
MECHANICAL / ELECTRICAL

STATE OF OKLAHOMA
MICHAEL L. ABLA
2639
REGISTERED ARCHITECT
7/31/23

CG
drawn by

MA
checked by

JULY 2023
date

revisions

MOORE PUBLIC SCHOOLS
BOARD OF EDUCATION
MOORE, OKLAHOMA

MOORE Public Schools
LEARNING FOR LIFE

CLASSROOM ADDITION
HIGHLAND WEST
JUNIOR HIGH SCHOOL

sheet no:

A305

WALL SECTIONS

OWNERSHIP USE OF DOCUMENTS:

AGP EXPRESSLY RESERVES ITS COPYRIGHT AND OTHER PROPERTY RIGHTS OF ALL PLANS AND DRAWINGS DESIGNED AND/OR PRODUCED. PLANS AND DRAWINGS ARE NOT TO BE REPRODUCED IN ANY FORM OR MANNER WITHOUT THE EXPRESSED WRITTEN CONSENT OF AGP.

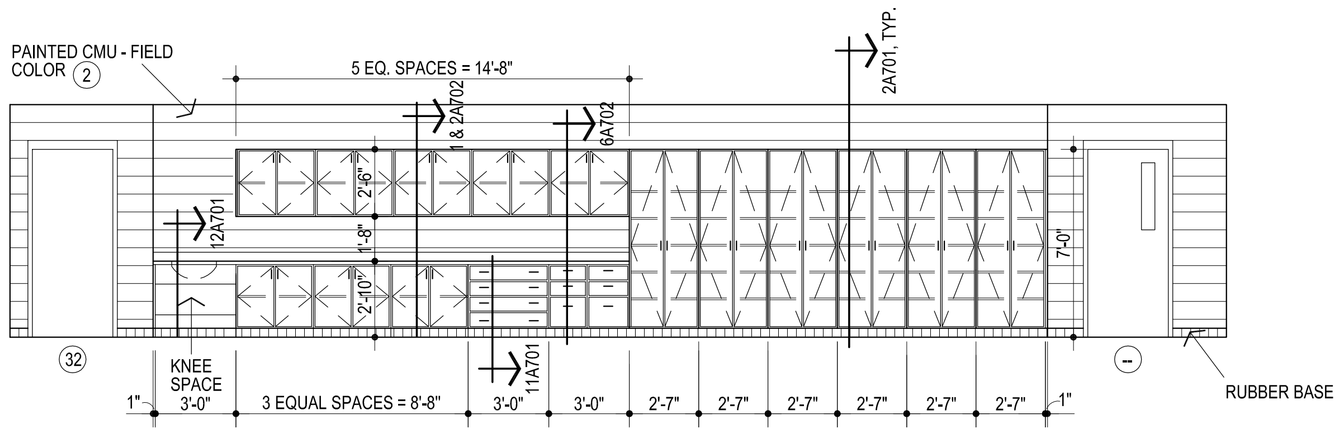

1 ELEVATION @ TYP. LAB

1/4" = 1'-0"

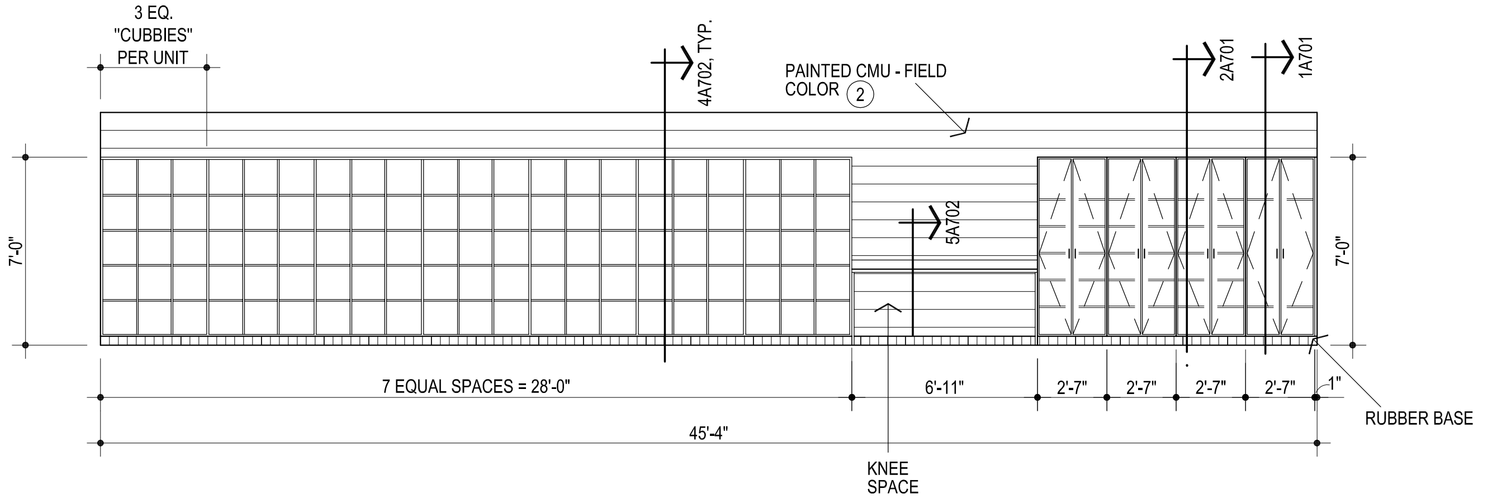

2 ELEVATION @ TYP. LAB

1/4" = 1'-0"

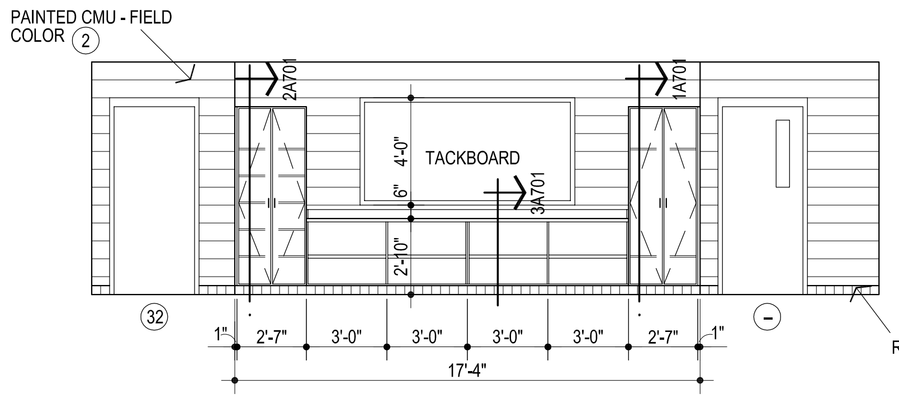

3 ELEVATION @ TYP. CLASSROOM

1/4" = 1'-0"

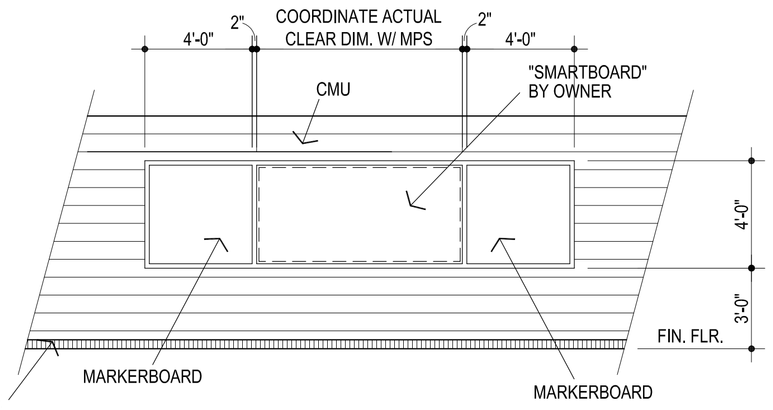

4 ELEV. @ TYP. CLASSROOM "SMARTBOARD"

1/4" = 1'-0"

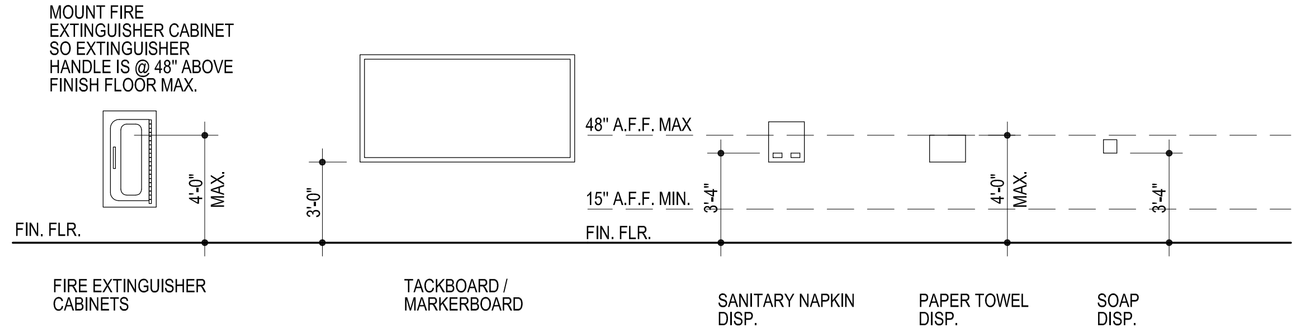

5 TYPICAL MOUNTING HEIGHTS

1/4" = 1'-0"

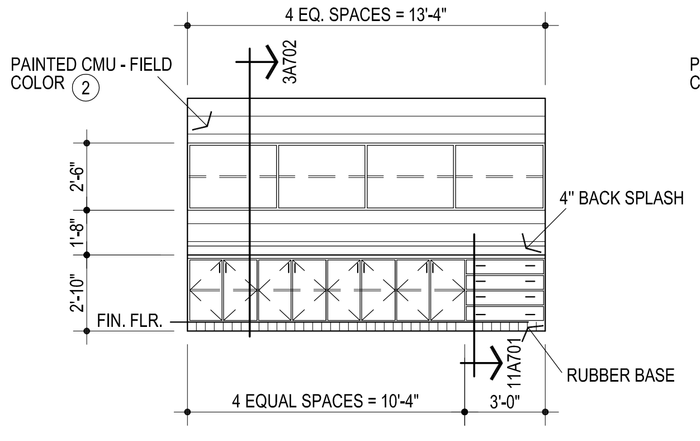

6 ELEVATION @ TYP. STORAGE ROOM

1/4" = 1'-0"

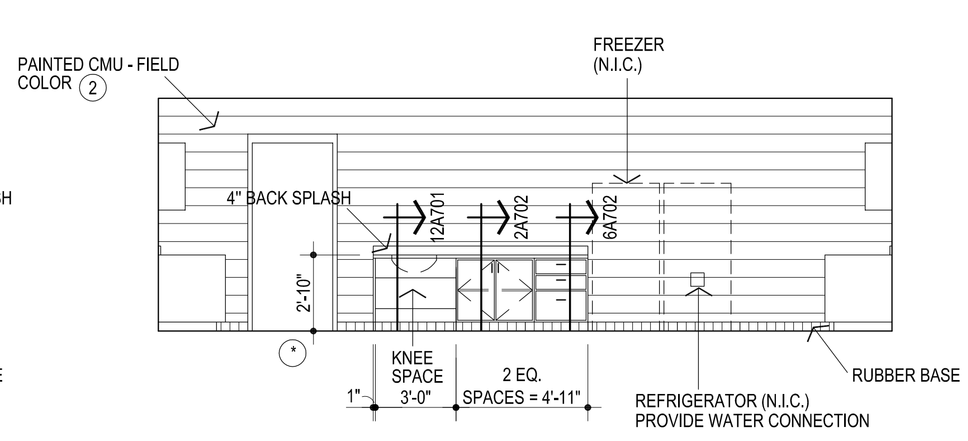

7 ELEVATION @ TYP. BASE CABINET - STORAGE ROOM

1/4" = 1'-0"

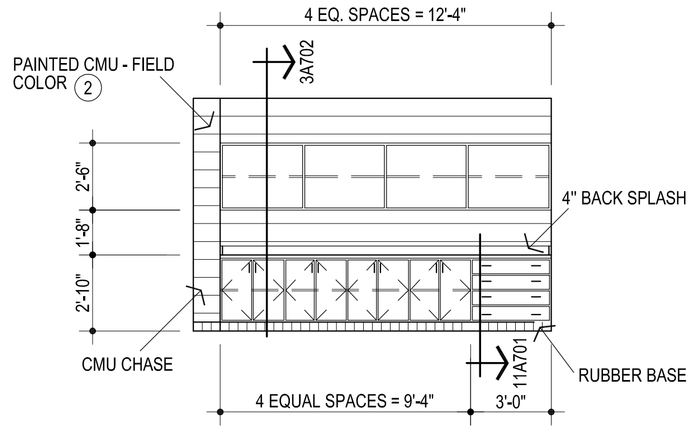

8 ELEVATION @ STORAGE ROOM #26

1/4" = 1'-0"

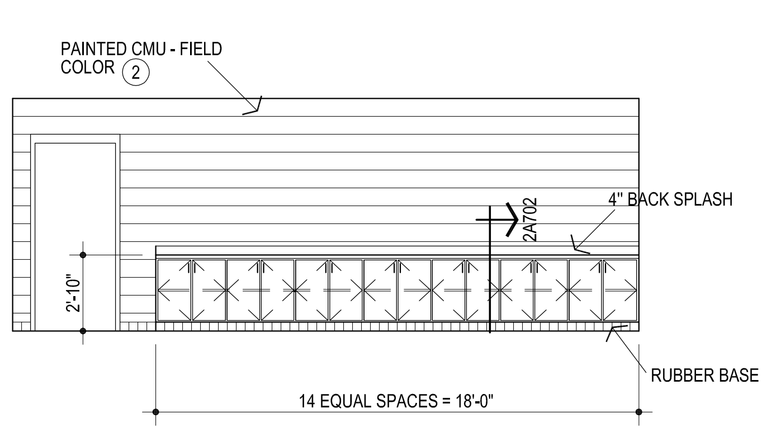

9 ELEVATION @ ROOM #31

1/4" = 1'-0"

NOTE: CONTRACTOR TO VERIFY THAT THE MOUNTING HEIGHTS OF ALL WALL MOUNTED FIXTURES (I.E. PLUMBING FIXTURES, GRAB BARS, MIRRORS, ETC.) MEET ALL APPLICABLE CODES & STANDARDS PRIOR TO INSTALLATION.

AGP
the Abla Griffin Partnership L.L.C.
201 N. BROADWAY
SUITE 210
MOORE, OK. 73160
405.735.3477
AGP@theAGP.net
www.theAGP.net

CEDAR CREEK
CIVIL

KFC ENGINEERING
STRUCTURAL

SALAS O'BRIEN
MECHANICAL / ELECTRICAL

STATE OF OKLAHOMA
MICHAEL L. ABLA
2639
REGISTERED ARCHITECT
7/31/23

CG
drawn by

MA
checked by

JULY 2023
date

revisions

MOORE PUBLIC SCHOOLS
BOARD OF EDUCATION
MOORE, OKLAHOMA

MOORE Public Schools
LEARNING FOR LIFE

CLASSROOM ADDITION
HIGHLAND WEST
JUNIOR HIGH SCHOOL

sheet no:

A401

OWNERSHIP USE OF DOCUMENTS:

AGP EXPRESSLY RESERVES ITS COPYRIGHT AND OTHER PROPERTY RIGHTS OF ALL PLANS AND DRAWINGS DESIGNED AND/OR PRODUCED. PLANS AND DRAWINGS ARE NOT TO BE REPRODUCED IN ANY FORM OR MANNER WITHOUT THE EXPRESSED WRITTEN CONSENT OF AGP.

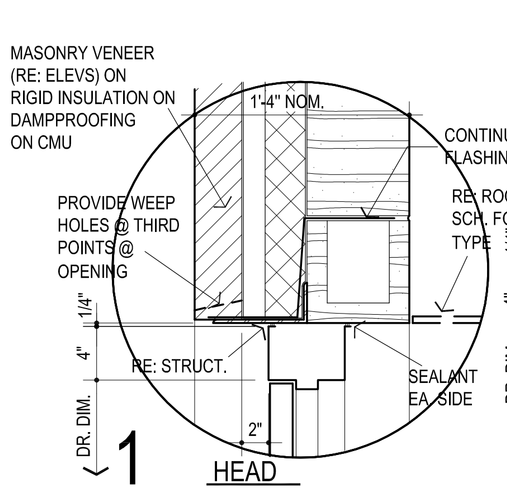

1 HEAD

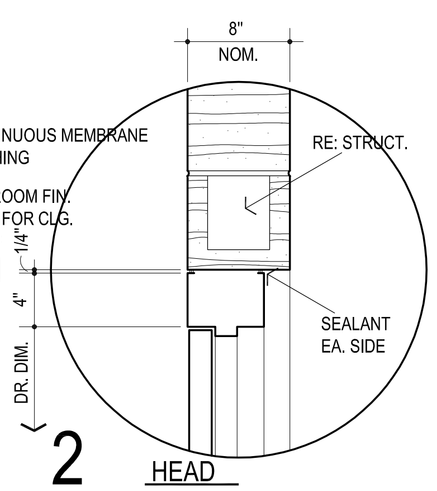

2 HEAD

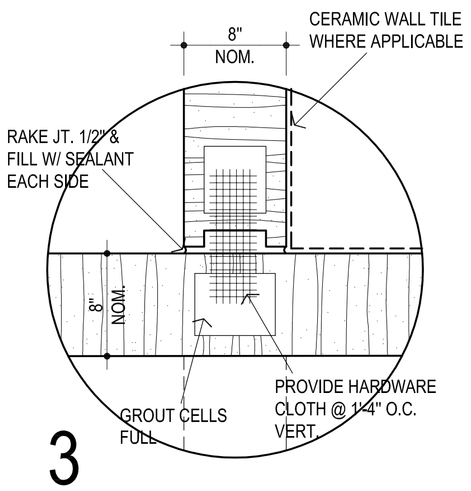

3

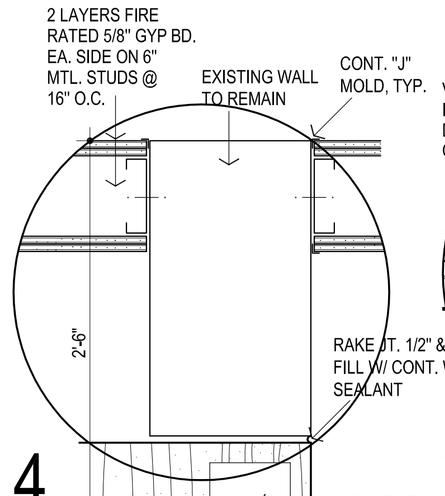

4

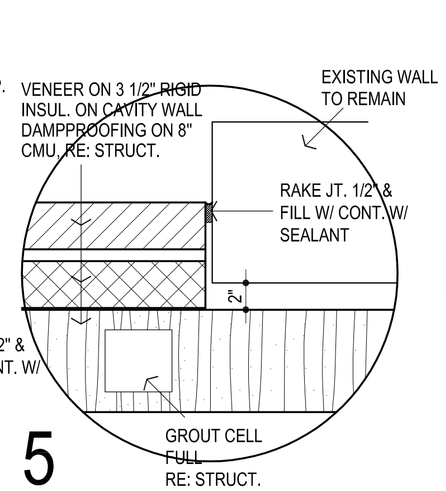

5

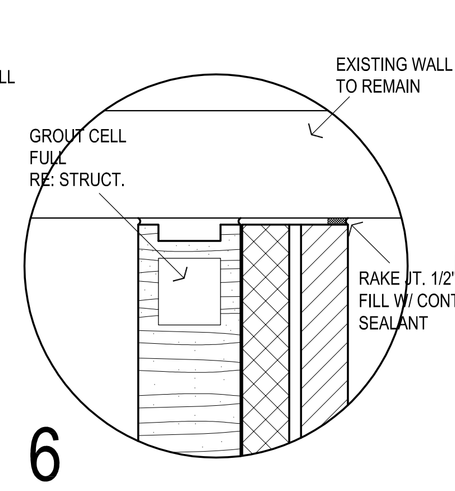

6

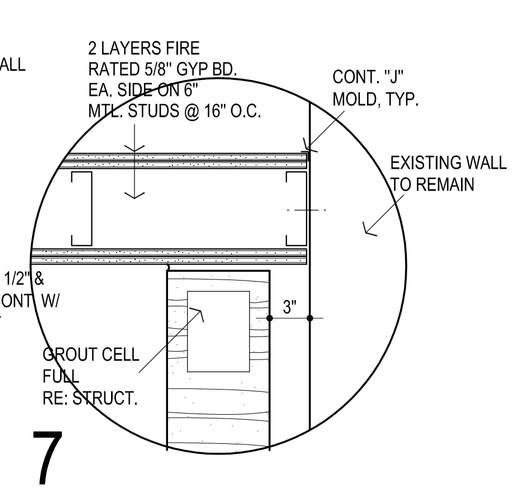

7

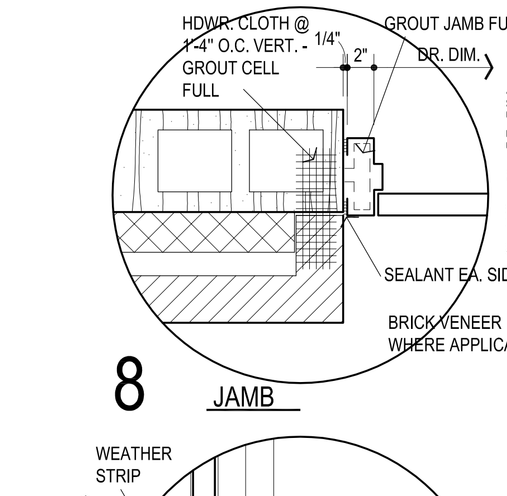

8 JAMB

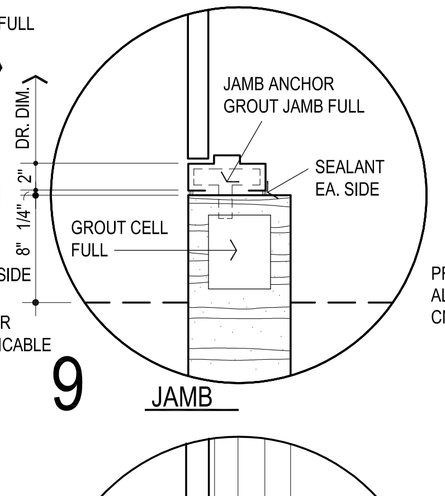

9 JAMB

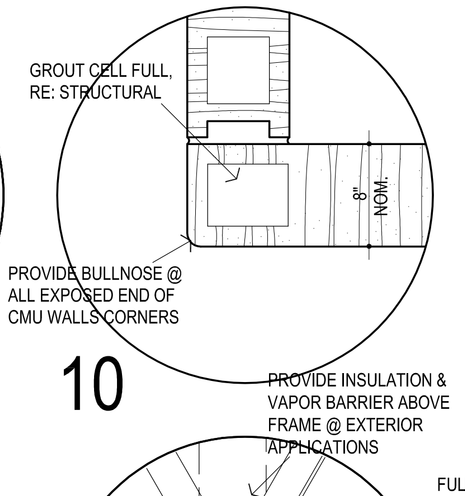

10

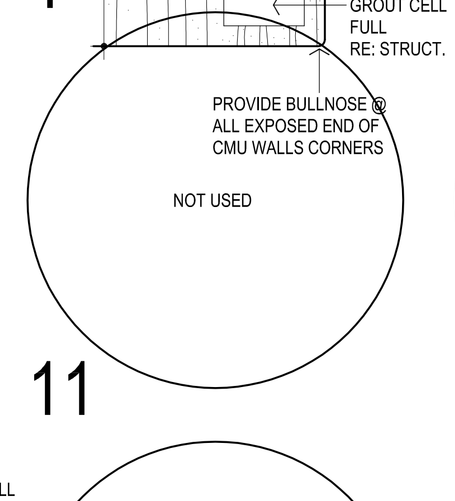

11

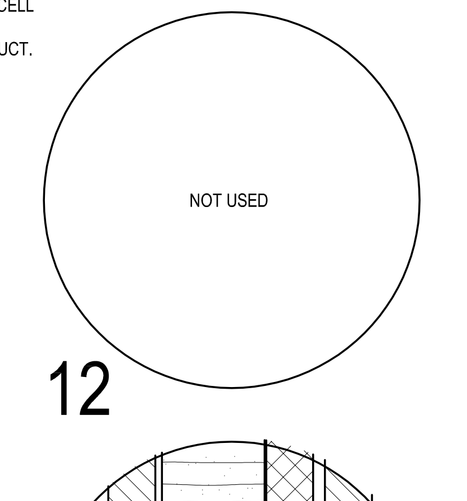

12

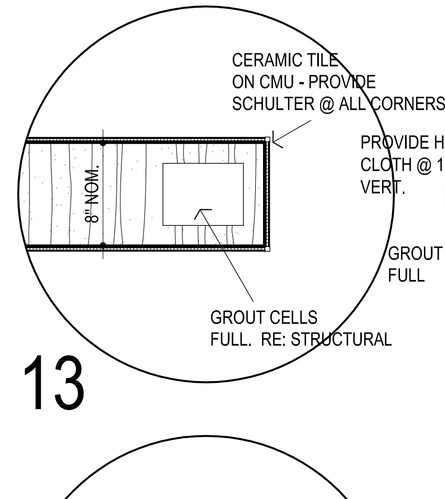

13

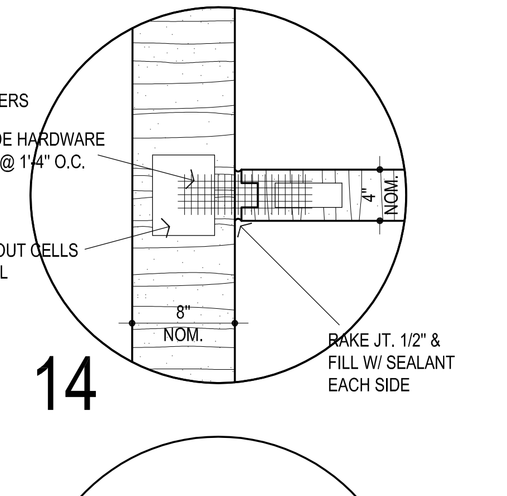

14

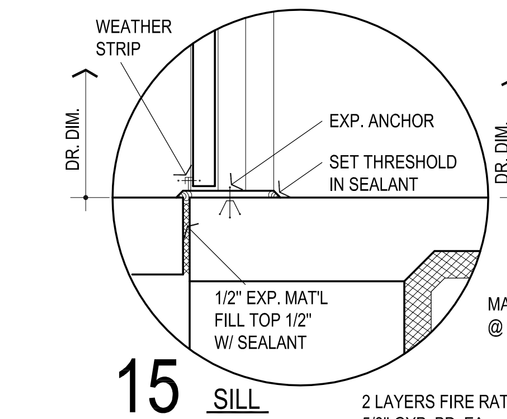

15 SILL

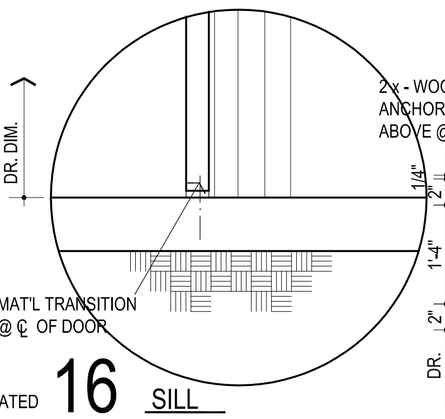

16 SILL

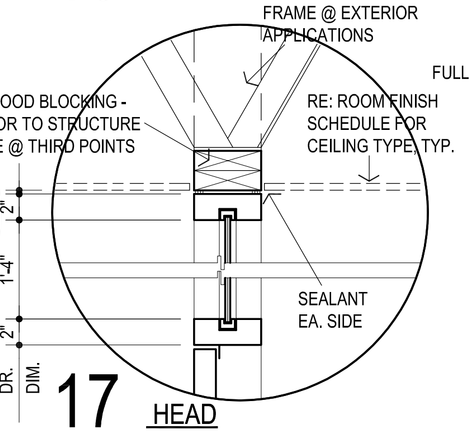

17 HEAD

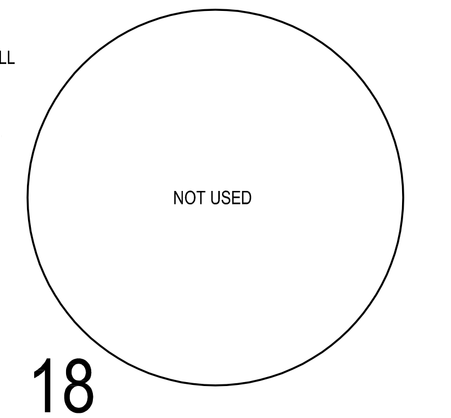

18

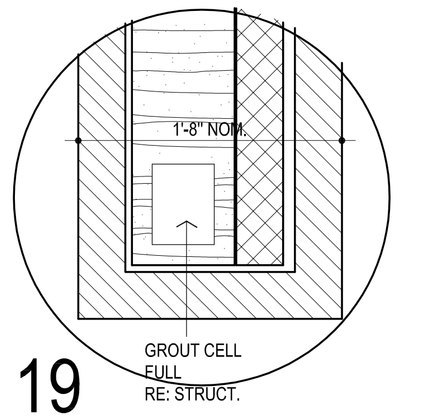

19

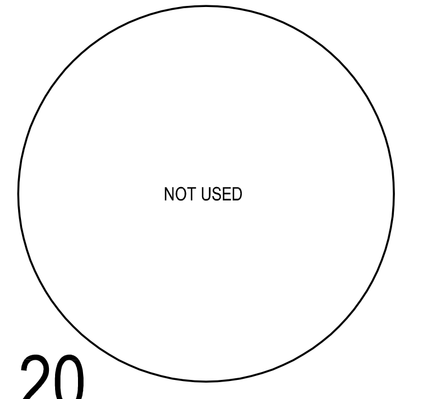

20

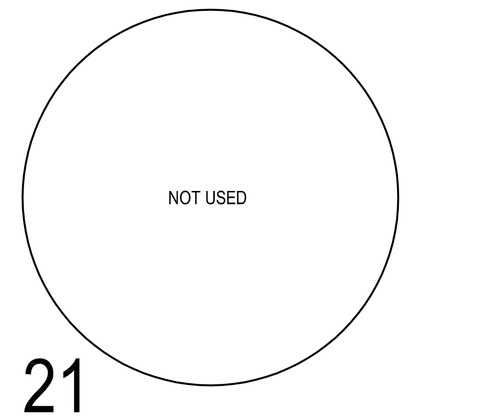

21

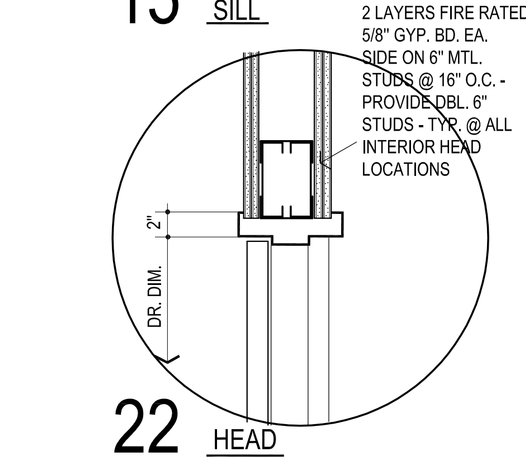

22 HEAD

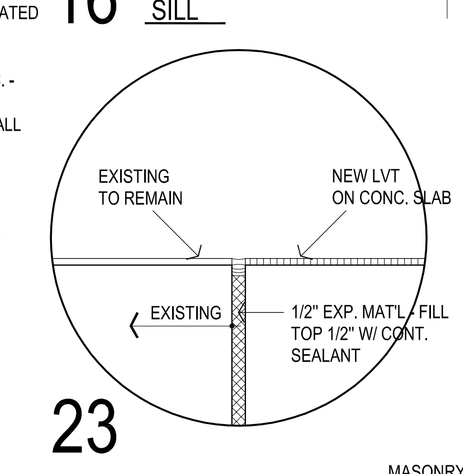

23

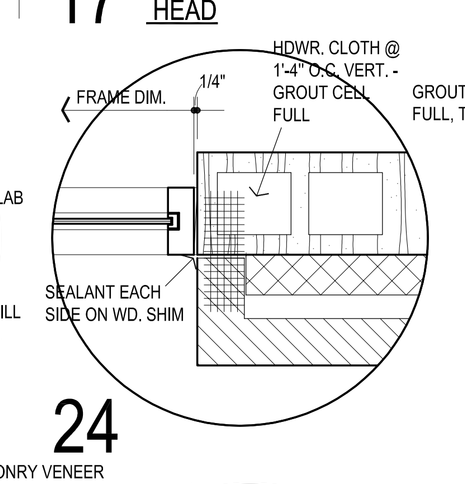

24

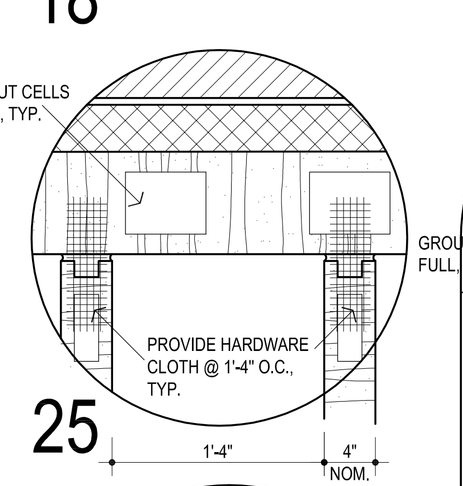

25

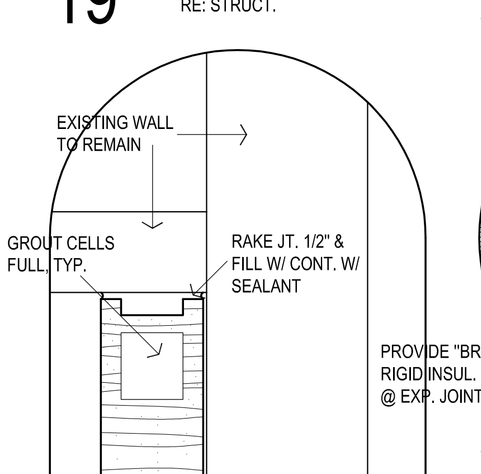

33

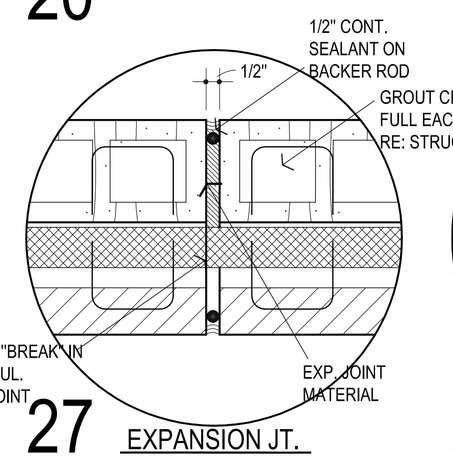

27 EXPANSION JT.

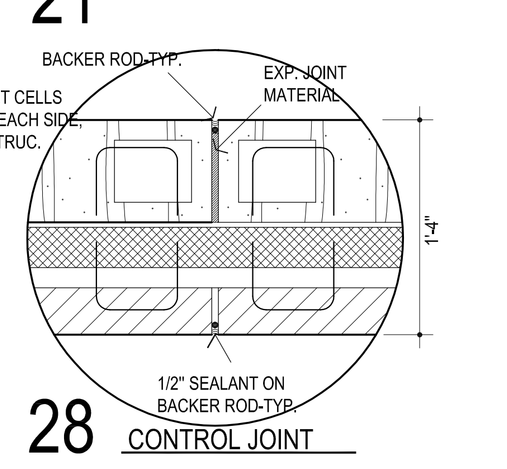

28 CONTROL JOINT

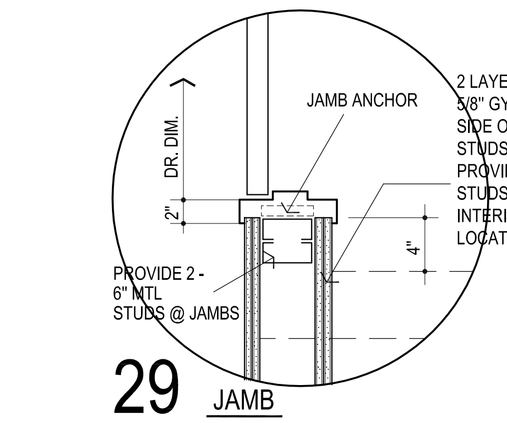

29 JAMB

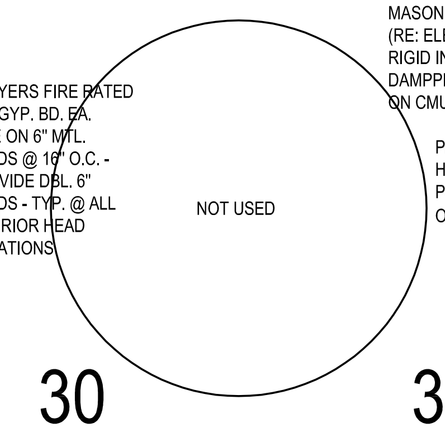

30

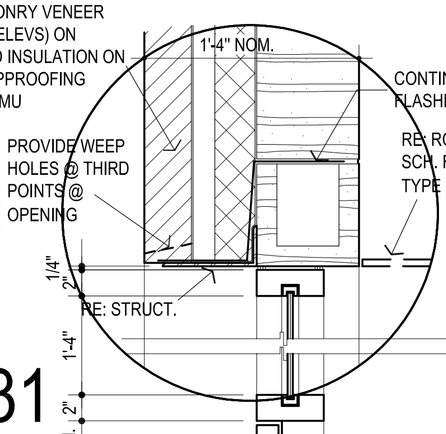

31 HEAD

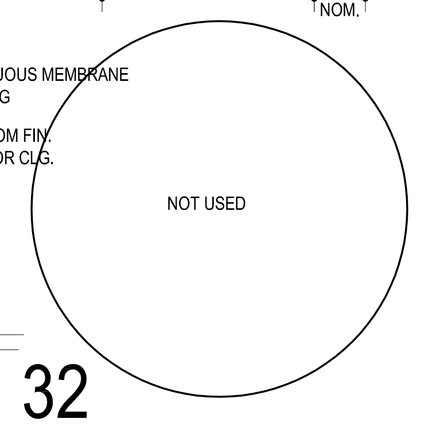

32

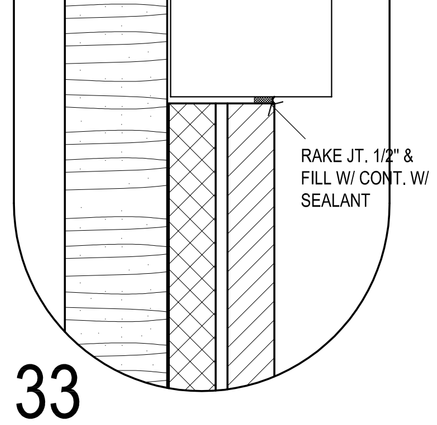

33

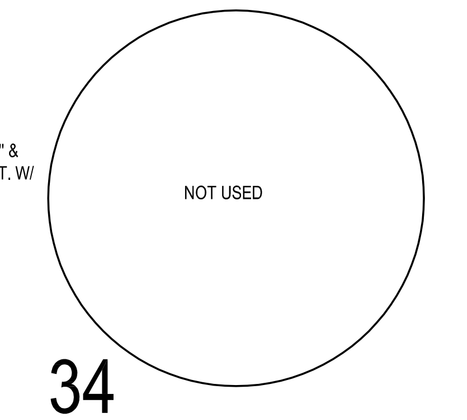

34

NOTES:

1. ALL DETAILS 1 1/2" = 1'-0" UNLESS NOTED OTHERWISE
2. GROUT FULL ALL H.M. JAMBS AT MASONRY WALLS UNLESS OTHERWISE NOTED
3. RE: ROOM FINISH SCHEDULE FOR FINISHES, FLOOR / WALL MATERIALS, ETC.

AGP
the Abla Griffin Partnership L.L.C.
201 N. BROADWAY
SUITE 210
MOORE, OK. 73160
405.735.3477
AGP@theAGP.net
www.theAGP.net

CEDAR CREEK
CIVIL

KFC ENGINEERING
STRUCTURAL

SALAS O'BRIEN
MECHANICAL / ELECTRICAL

STATE OF OKLAHOMA
MICHAEL L. ABLA
2639
REGISTERED ARCHITECT
7/31/23

CG
drawn by

MA
checked by

JULY 2023
date

revisions

MOORE PUBLIC SCHOOLS
BOARD OF EDUCATION
MOORE, OKLAHOMA

MOORE Public Schools
LEARNING FOR LIFE

CLASSROOM ADDITION
HIGHLAND WEST
JUNIOR HIGH SCHOOL

sheet no:

A501

OWNERSHIP USE OF DOCUMENTS:

AGP EXPRESSLY RESERVES ITS COPYRIGHT AND OTHER PROPERTY RIGHTS OF ALL PLANS AND DRAWINGS DESIGNED AND/OR PRODUCED. PLANS AND DRAWINGS ARE NOT TO BE REPRODUCED IN ANY FORM OR MANNER WITHOUT THE EXPRESSED WRITTEN CONSENT OF AGP.

DESCRIPTION	RM. NO.	FLOOR: LUXURY VINYL TILE	FLOOR: CARPET TILE	FLOOR: CERAMIC TILE	FLOOR: EXPOSED CONCRETE W/ HARDENER	FLOOR: LAB FLOORING	BASE: CERAMIC TILE	BASE: RUBBER	BASE: NONE	CEILING: 2 X 2 ACOUT. LAY-IN (TEG)	CEILING: 2 X 2 ACOUT. LAY-IN (SQ)	CEILING: GYP. BOARD	CEILING: EXPOSED STRUCTURE	CLG. HT.	REMARKS	RM. NO.	WALLS: CERAMIC TILE	WALLS: CONCRETE MASONRY UNIT	PAINT / COLOR SCHEDULE: CLG.	WALLS: N	WALLS: E	WALLS: S	WALLS: W	REMARKS
VESTIBULE	1	○						○				●		10'-0"		1		●	(1)	(2)	(2)	(2)	(2)	(9)(10)(17)
LABORATORY	2	○						○			○			9'-4"		2		●	(23)	(2)	(2)	(3)	(2)	(9)(10)(18)(19)(26)(27)
LABORATORY	3	○						○			○			9'-4"		3		●	(23)	(2)	(2)	(3)	(2)	(9)(10)(18)(19)(26)(27)
STORAGE	4	○						○			○			9'-4"		4		●	(23)	(2)	(2)	(2)	(2)	(9)
STORAGE	5	○						○			○			9'-4"		5		●	(23)	(2)	(2)	(2)	(2)	(9)(10)(18)(19)
LABORATORY	6	○						○			○			9'-4"		6		●	(23)	(2)	(3)	(2)	(2)	(9)(10)(18)(19)(26)(27)
LABORATORY	7	○						○			○			9'-4"		7		●	(23)	(3)	(2)	(2)	(2)	(9)(10)(18)(19)(26)(27)
CORRIDOR	8	○						○		○		●		10'-0"		8		●	(1)(24)	(2)	(2)	(2)	(2)	(9)(10)(11)(17)
I.T.	9		○					○			○			8'-8"		9		●	(1)	(2)	(2)	(2)	(2)	(9)
MECH. / ELEC.	10				○			○					●	---	EPOXY PAINT	10		●						
TOILET	11			○			○					●		9'-4"	EPOXY PAINT	11	⊠		(1)	(15)	(15)	(15)	(15)	(14)
TOILET	11a			○			○					●		9'-4"	EPOXY PAINT	11a		●	(1)	(2)(15)	(2)(15)	(2)(15)	(2)(15)	(14) EPOXY PAINT
TOILET	11b			○			○					●		9'-4"	EPOXY PAINT	11b		●						
TOILET	11c			○			○					●		9'-4"	EPOXY PAINT	11c		●	(1)	(2)(15)	(2)(15)	(2)(15)	(2)(15)	(14) EPOXY PAINT
TOILET	11d			○			○					●		9'-4"	EPOXY PAINT	11d		●	(1)	(2)(15)	(2)(15)	(2)(15)	(2)(15)	(14) EPOXY PAINT
TOILET	11e			○			○					●		9'-4"	EPOXY PAINT	11e		●	(1)	(2)(15)	(2)(15)	(2)(15)	(2)(15)	(14) EPOXY PAINT
TOILET	11f			○			○					●		9'-4"	EPOXY PAINT	11f		●	(1)	(2)(15)	(2)(15)	(2)(15)	(2)(15)	(14) EPOXY PAINT
TOILET	11g			○			○					●		9'-4"	EPOXY PAINT	11g		●	(1)	(2)(15)	(2)(15)	(2)(15)	(2)(15)	(14) EPOXY PAINT
TOILET	11h			○			○					●		9'-4"	EPOXY PAINT	11h		●	(1)	(2)(15)	(2)(15)	(2)(15)	(2)(15)	(14) EPOXY PAINT
TOILET	11j			○			○					●		9'-4"	EPOXY PAINT	11j		●	(1)	(2)(15)	(2)(15)	(2)(15)	(2)(15)	(14) EPOXY PAINT
TOILET	11k			○			○					●		9'-4"	EPOXY PAINT	11k		●						
CUSTODIAN	12				○			○				●		8'-8"	EPOXY PAINT	12		●	(1)	(2)	(2)	(2)	(2)	(9) EPOXY PAINT
CLASSROOM	13		○					○			○			8'-8"		13		●	(23)	(2)	(2)	(2)	(3)	(8)(9)(18)(19)(26)(27)
CLASSROOM	14		○					○			○			8'-8"		14		●	(23)	(2)	(2)	(2)	(3)	(8)(9)(18)(19)(26)(27)
LABORATORY	15	○						○			○			9'-4"		15		●	(23)	(3)	(2)	(2)	(2)	(9)(10)(18)(19)(26)(27)
STORAGE	16	○						○			○			9'-4"		16		●	(23)	(2)	(2)	(2)	(2)	(9)(10)(18)(19)
LABORATORY	17	○						○			○			9'-4"		17		●	(23)	(3)	(2)	(2)	(2)	(9)(10)(18)(19)(26)(27)
CORRIDOR	18	○						○		○		●		10'-0"		18		●	1(24)	(2)	(2)	(2)	(2)	(9)(10)(11)(17)
VESTIBULE	19	○						○				●		10'-0"		19		●	(1)	(2)	(2)	(2)	(2)	(9)(10)(17)
CORRIDOR	20	○						○		○		●		10'-0"		20		●	(1)(24)	(2)	(2)	(2)	(2)	(9)(10)(11)(17)
CORRIDOR	21	○						○		○		●		10'-0"		21		●	(1)(24)	(2)	(2)	(2)	(2)	(9)(10)(11)(17)
CLASSROOM	22		○					○			○			8'-8"		22		●	(23)	(2)	(2)	(2)	(3)	(8)(9)(18)(19)(26)(27)
CLASSROOM	23		○					○			○			8'-8"		23		●	(23)	(2)	(2)	(2)	(3)	(8)(9)(18)(19)(26)(27)
CLASSROOM	24		○					○			○			8'-8"		24		●	(23)	(2)	(2)	(2)	(3)	(8)(9)(18)(19)(26)(27)
CLASSROOM	25		○					○			○			8'-8"		25		●	(23)	(2)	(2)	(2)	(3)	(8)(9)(18)(19)(26)(27)
VESTIBULE	26	○						○				●		10'-0"		26		●	(1)	(2)	(2)	(2)	(2)	(9)(10)(17)

OFFICE AREA

VESTIBULE	27	○						○			○			10'-0"		27		●	(24)	(2)	(2)	(2)	(2)	(9)(10)(11)(17)
CORRIDOR	28	○						○			○			10'-0"		28		●	(24)	(2)	(2)	(2)	(2)	(9)(10)(11)(17)
RECEPTION	29	○						○			○	●		9'-4" / 10'-0"		29		●	1(24)	(2)	(2)	(2)	(2)	(9)(10)(11)(17)(18)(19)(27)
STORAGE	30		○					○			○			8'-8"		30		●	(23)	(2)	(2)	(2)	(2)	(9)(8a)
PRINCIPAL	31		○					○			○			8'-8"		31		●	(24)	(2)	(2)	(2)	(3)	(9)(8a)(18)(19)(27)
COPY	32	○						○			○	●		9'-4"		32		●	1(24)	(3)	(3)	(3)	(3)	(9)(10)(18)(19)
TOILET	33			○			○					●		8'-8"	EPOXY PAINT	33	⊠		(1)	(15)	(15)	(15)	(15)	(14)
TOILET	34			○			○					●		8'-8"	EPOXY PAINT	34	⊠		(1)	(15)	(15)	(15)	(15)	(14)
TOILET	35			○			○					●		8'-8"	EPOXY PAINT	35	⊠		(1)	(15)	(15)	(15)	(15)	(14)
CONFERENCE	36		○					○		○				9'-4"		36		●	(24)	(2)	(2)	(2)	(3)	(9)(8a)(27)
OFFICE	37		○					○		○				8'-8"		37		●	(24)	(2)	(2)	(2)	(3)	(9)(8a)(27)
OFFICE	38		○					○		○				8'-8"		38		●	(24)	(2)	(2)	(2)	(3)	(9)(8a)(27)
CORRIDOR	39	○						○		○				8'-8"		39		●	(24)	(2)	(2)	(2)	(2)	(9)(10)
COFFEE	40	○						○		○				8'-8"		40		●	(24)	(2)	(2)	(2)	(2)	(9)(10)(18)(19)

1 ROOM FINISH SCHEDULE

- SCHEDULE ORIENTED SAME AS PLAN
- INDICATES MATERIAL IN A GIVEN AREA
- MATERIAL ON ALL SURFACES
- MATERIAL ON EACH INDIVIDUAL SURFACE
- ● IF CIRCLE IS BLACKENED - SURFACE TO RECEIVE PAINTER'S FINISH
- ○ IF CIRCLE IS BLANK - SURFACE OR MATERIAL IS PREFINISHED OR NOT PAINTED

PAINT:

(1) GYP. BOARD CEILINGS: SHERWIN-WILLIAMS - SW7006 - EXTRA WHITE
(2) WALLS - FIELD: SHERWIN-WILLIAMS - SW7008 - ALABASTER
(3) WALL - ACCENT WALL: SHERWIN-WILLIAMS - SW7052 GRAY AREA
(4) H.M. DOORS & FRAMES : SHERWIN-WILLIAMS - SW7055 ENDURING BRONZE
(5) MISCELLANEOUS METALS: SHERWIN-WILLIAMS - SW7055 ENDURING BRONZE
(6) WOOD DOORS & MILLWORK: ARCHITECTURAL WOOD DOORS - CLEAR CL07
(7) EXTERIOR WALL PAINT: SHERWIN-WILLIAMS - MATCH NEW BRICK VENEER COLOR (31)
(7a) EXTERIOR H.M. DOORS & FRAMES & WINDOWS & EXISTING METAL WALL PANELS WHERE NOTED: SHERWIN-WILLIAMS - SW7055 ENDURING BRONZE

PREFINISHED COLORS:

(8) CARPET TILES: INTERFACE FLOR - COLOR "A" : 410-107025 NATURAL - COLOR "B": AE317-105829 AZURE
(9) RUBBER WALL BASE: ROPPE - 100 BLACK
(10) LUXURY VINYL TILE COLOR (A) : ARMSTRONG LVT - NA931 CASPIAN SAND
(11) LUXURY VINYL TILE COLOR (B) : ARMSTRONG LVT - NA933 NILE NIGHT
(12) GROUT: COLOR 1 TO BE SELECTED FROM MFR'S STANDARD COLORS
(13) GROUT: COLOR 2 TO BE SELECTED FROM MFR'S STANDARD COLORS
(14) CERAMIC TILE FLOORS: AMERICAN OLEAN - ULTRA MODERN - UM07 - PROGRESSIVE GRAY OR TILEBAR - COMET - WHITE POLISHED
(15) CERAMIC TILE WALLS & BASE: AMERICAN OLEAN - ULTRA MODERN - UM05 - INFINITE CREAM OR TILEBAR - COMET - DARK MATTE W/ MTL. TRIM @ ALL OUTSIDE CORNERS
(16) NUMBER NOT USED
(17) LUXURY VINYL TILE COLOR (C) : ARMSTRONG LVT - NA503 SINGING THE BLUES
(18) SOLID SURFACE (COUNTERTOPS) :CORIAN - DEEP CAVIAR
(19) PLASTIC LAMINATE (FACING AND EDGING) : WILSONART - 7925-38 - MONTICELLO MAPLE
(20) NUMBER NOT USED
(21) VINYL "T" EDGING: - TO BE SELECTED FROM MFR'S STANDARD COLORS
(22) MELAMINE: TO BE SELECTED FROM MFR'S STANDARD COLORS
(23) 2 X 2 ACOUSTICAL LAY - IN TILES - SQUARE EDGE : REFER SPECIFICATIONS
(24) 2 X 2 ACOUSTICAL LAY - IN TILES - TEGULAR EDGE : REFER SPECIFICATIONS
(25) INTERIOR SIGNAGE: MOHAWK SIGN SYSTEMS - BLACK W/ WHITE LETTERS
(26) MARKERBOARD: CLARIDGE - NO. 100 - LCS WHITE
(27) TACKBOARD: CLARIDGE - KB662 - GREY
(28) NUMBER NOT USED
(29) NUMBER NOT USED

EXTERIOR COLORS:

(30) MASONRY BRICK VENEER - CLOUD CERAMICS - LIGHT IVORY VELOUR
(31) MASONRY BRICK VENEER - KANAS BRICK AND TILE - 530 FLASH
(32) PREFINISHED METAL SOFFIT PANEL: COLOR TO BE SELECTED FROM ALL MFR. COLORS - BERRIDGE - MEDIUM BRONZE
(33) PREFINISHED METAL COPING: COLOR TO BE SELECTED FROM ALL MFR. COLORS - MATCH PREFINISHED WALL PANELS
(34) PREFINISHED METAL WALL PANEL: COLOR TO BE SELECTED FROM ALL MFR. COLORS - LAMINATORS, INC. - MEDIUM BRONZE
(35) MASONRY MORTAR - COLOR TO BE SELECTED FROM ALL MFR. COLORS

2 COLOR SCHEDULE

AGP
the Abla Griffin Partnership L.L.C.
201 N. BROADWAY
SUITE 210
MOORE, OK. 73160
405.735.3477
AGP@theAGP.net
www.theAGP.net

CEDAR CREEK
CIVIL

KFC ENGINEERING
STRUCTURAL

SALAS O'BRIEN
MECHANICAL / ELECTRICAL

STATE OF OKLAHOMA
MICHAEL L. ABLA
2639
REGISTERED ARCHITECT
7/31/23

CG
drawn by

MA
checked by

JULY 2023
date

revisions

MOORE PUBLIC SCHOOLS
BOARD OF EDUCATION
MOORE, OKLAHOMA

MOORE Public Schools
LEARNING FOR LIFE

CLASSROOM ADDITION
HIGHLAND WEST
JUNIOR HIGH SCHOOL

sheet no:
A601

ROOM FIN. SCHEDULE

OWNERSHIP USE OF DOCUMENTS:

AGP EXPRESSLY RESERVES ITS COPYRIGHT AND OTHER PROPERTY RIGHTS OF ALL PLANS AND DRAWINGS DESIGNED AND/OR PRODUCED. PLANS AND DRAWINGS ARE NOT TO BE REPRODUCED IN ANY FORM OR MANNER WITHOUT THE EXPRESSED WRITTEN CONSENT OF AGP.

DOOR NO.	LOCATION FROM	LOCATION TO	DOOR ELEV.	DOOR MATL	DOOR SIZE WIDTH	DOOR SIZE HEIGHT	DOOR SIZE TH' K	FRAME ELEV.	DOOR DETAILS HEAD	DOOR DETAILS SILL	DOOR DETAILS JAMB	DOOR DETAILS JAMB	REMARKS	HDWR. SET NO.
1	26	EXT.	A	HM.	PR. 3'-0"	7'-0"	1 3/4"	A	1A501	15A501	8A501	8A501		12
2	21	26	^	^	^	^	^	^	1A501	16A501	9A501	9A501		9
3	19	EXT.	^	^	^	^	^	^	1A501	15A501	8A501	8A501		12
4	18	19	^	^	^	^	^	^	2A501	16A501	9A501	9A501		9
5	1	EXT.	^	v	v	v	^	^	1A501	15A501	8A501	8A501		12
6	8	1	^	HM.	PR. 3'-0"	^	^	^	2A501	16A501	9A501	9A501		9
7	25	21	v	WD.	3'-0"	^	^	^	^	^	^	^		8
8	24	21	A	^	^	^	^	^	^	^	^	^		8
9	CHS	21	B	^	^	^	^	^	^	^	^	^	3/4 HR. DR & FRAME	3
10	23	21	A	^	^	^	^	^	^	^	^	^		8
11	22	21	^	^	^	^	^	^	^	^	^	^		8
12	14	8	^	^	^	^	^	^	^	^	^	^		8
13	13	8	^	^	^	^	^	^	^	^	^	^		8
14	17	8	^	^	^	^	^	^	^	^	^	^		8
15	16	17	^	^	^	^	^	^	^	^	^	^		10
16	16	15	v	^	^	^	^	^	^	^	^	^		10
17	15	18	A	^	v	^	^	^	^	^	^	^		8
18	12	8	B	^	3'-0"	^	^	^	^	^	^	^	20 MIN. DR & FRAME	3
19	CHS	12	^	^	2'-4"	^	^	^	^	^	^	^		5
20	MECH	12	^	^	3'-0"	^	^	^	^	^	^	^		5
21	10	8	^	^	^	^	^	^	^	^	^	^	20 MIN. DR & FRAME	3
22	9	10	v	^	^	^	^	^	^	^	^	^		5
23	CHS	9	B	^	^	^	^	^	^	^	^	^	3/4 HR. DR & FRAME	3
24	6	8	A	^	^	^	^	^	^	^	^	^		8
25	4	6	^	^	^	^	^	^	^	^	^	^		10
26	4	2	^	^	^	^	^	^	^	^	^	^		10
27	2	8	^	^	^	^	^	^	^	^	^	^		8
28	3	8	^	^	^	^	^	^	^	^	^	^		8
29	5	3	^	^	^	^	^	^	^	^	^	^		10
30	5	7	v	^	^	^	^	^	^	^	^	^		10
31	7	8	A	^	v	^	^	^	^	^	^	^		8
32	---	---	B	^	3'-0"	^	^	^	^	^	^	^	11 LOCATIONS	5
33			C	^	2'-0"	^	^	^	v	v	v	v	8 LOCATIONS	4
34			C	^	3'-0"	^	^	^	2A501	16A501	9A501	9A501	2 LOCATIONS	4
35	EXIST	20	B	v	PR. 3'-0"	v	v	v	22A501	16A501	29A501	29A501	1 HR. DR & FRAME	7
36	CHASE	8	B	WD.	2'-0"	7'-0"	1 3/4"	A	2A501	16A501	9A501	9A501	20 MIN. DR & FRAME	3
OFFICE AREA														
O1	27	EXT	D	ALUM.	PR. 3'-0"	7'-0"	1 3/4"	B	17A501	15A501	24A501	24A501		1
O2	27	EXT	D	ALUM.	PR. 3'-0"	^	^	B	17A501	15A501	24A501	24A501		1
O3	28	27	D	ALUM.	PR. 3'-0"	^	^	B	17A501	16A501	24A501, SIM.	24A501, SIM.		2
O4	28	27	D	ALUM.	PR. 3'-0"	^	^	B	17A501	16A501	24A501, SIM.	24A501, SIM.		2
O5	29	27	C	ALUM.	3'-0"	^	^	C	17A501	16A501	24A501, SIM.	24A501, SIM.		14
O6	29	28	A	WD.	^	^	^	A	2A501	16A501	9A501	9A501	3/4 HR. DR & FRAME	13
O7	28	EXIST	^	^	^	^	^	^	^	^	^	^		13
O8	40	EXIST	v	^	^	^	^	^	^	^	^	^	3/4 HR. DR & FRAME	6
O9	39	38	A	^	^	^	^	^	^	^	^	^		10
O10	39	35	B	^	^	^	^	^	^	^	^	^		11
O11	39	37	A	^	^	^	^	^	^	^	^	^		10
O12	39	34	B	^	^	^	^	^	^	^	^	^		11
O13	39	36	A	^	^	^	^	^	^	^	^	^		4
O14	CHS	31	B	^	^	^	^	^	^	^	^	^		3
O15	31	33	B	^	^	^	^	^	^	^	^	^		11
O16	32	31	A	v	v	v	v	v	v	v	v	v		10
O17	29	30	B	WD.	3'-0"	7'-0"	1 3/4"	A	2A501	16A501	9A501	9A501		5

1 DOOR SCHEDULE

G1 7/8" NOM. TEMPERED INSULATING GLASS

G2 1/4" CLEAR TEMPERED GLASS

G3 1/4" FIRE RATED GLASS

G4 1/4" IMPACT RESISTANT GLASS

G5 7/8" IMPACT RESISTANT INSULATING GLASS

2 GLAZING SCHEDULE

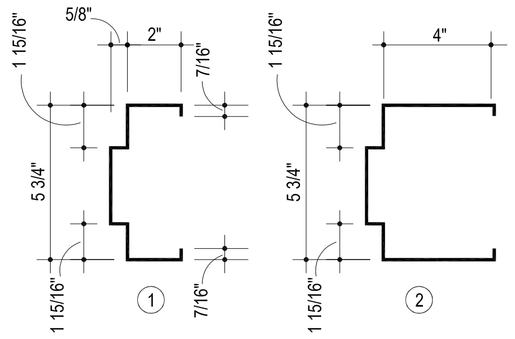

3 FRAME PROFILE

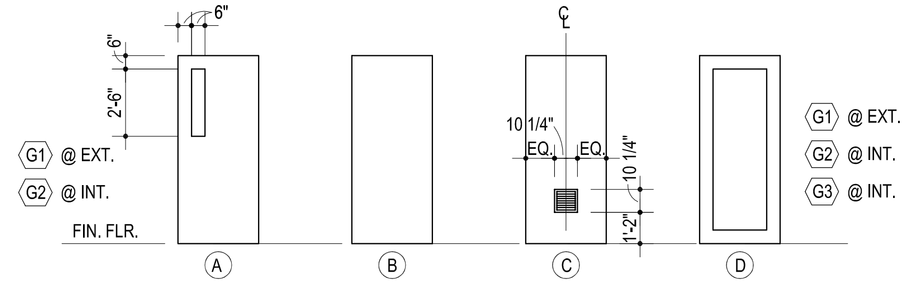

PROVIDE LOUVER "IN DOOR" EQUAL TO ACP MODEL NO. STEEL ADL8X8. DOOR MFR TO PROVIDE "RAILS" ALL AROUND OPENING, ATTACH W/ TAMPERPROOF SCREWS

4 DOOR ELEVATIONS

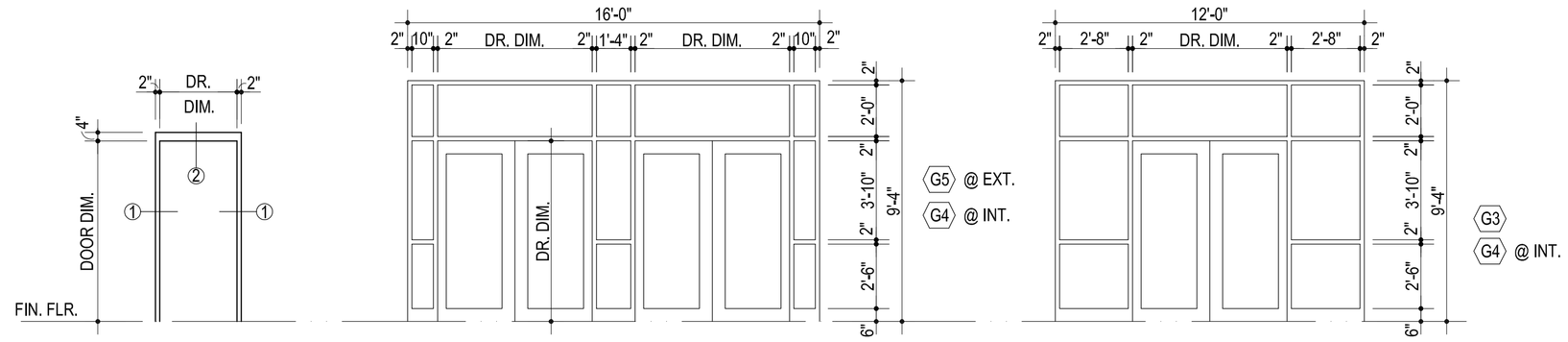

5 DOOR FRAME ELEVATIONS

AGP
the Abla Griffin Partnership L.L.C.
201 N. BROADWAY
SUITE 210
MOORE, OK. 73160
405.735.3477
AGP@theAGP.net
www.theAGP.net

CEDAR CREEK
CIVIL

KFC ENGINEERING
STRUCTURAL

SALAS O'BRIEN
MECHANICAL / ELECTRICAL

STATE OF OKLAHOMA
MICHAEL L. ABLA
2639
REGISTERED ARCHITECT
7/31/23

CG
drawn by

MA
checked by

JULY 2023
date

revisions

MOORE PUBLIC SCHOOLS
BOARD OF EDUCATION
MOORE, OKLAHOMA

MOORE Public Schools
LEARNING FOR LIFE

CLASSROOM ADDITION
HIGHLAND WEST
JUNIOR HIGH SCHOOL

sheet no:

A602

OWNERSHIP USE OF DOCUMENTS:

AGP EXPRESSLY RESERVES ITS COPYRIGHT AND OTHER PROPERTY RIGHTS OF ALL PLANS AND DRAWINGS DESIGNED AND/OR PRODUCED. PLANS AND DRAWINGS ARE NOT TO BE REPRODUCED IN ANY FORM OR MANNER WITHOUT THE EXPRESSED WRITTEN CONSENT OF AGP.

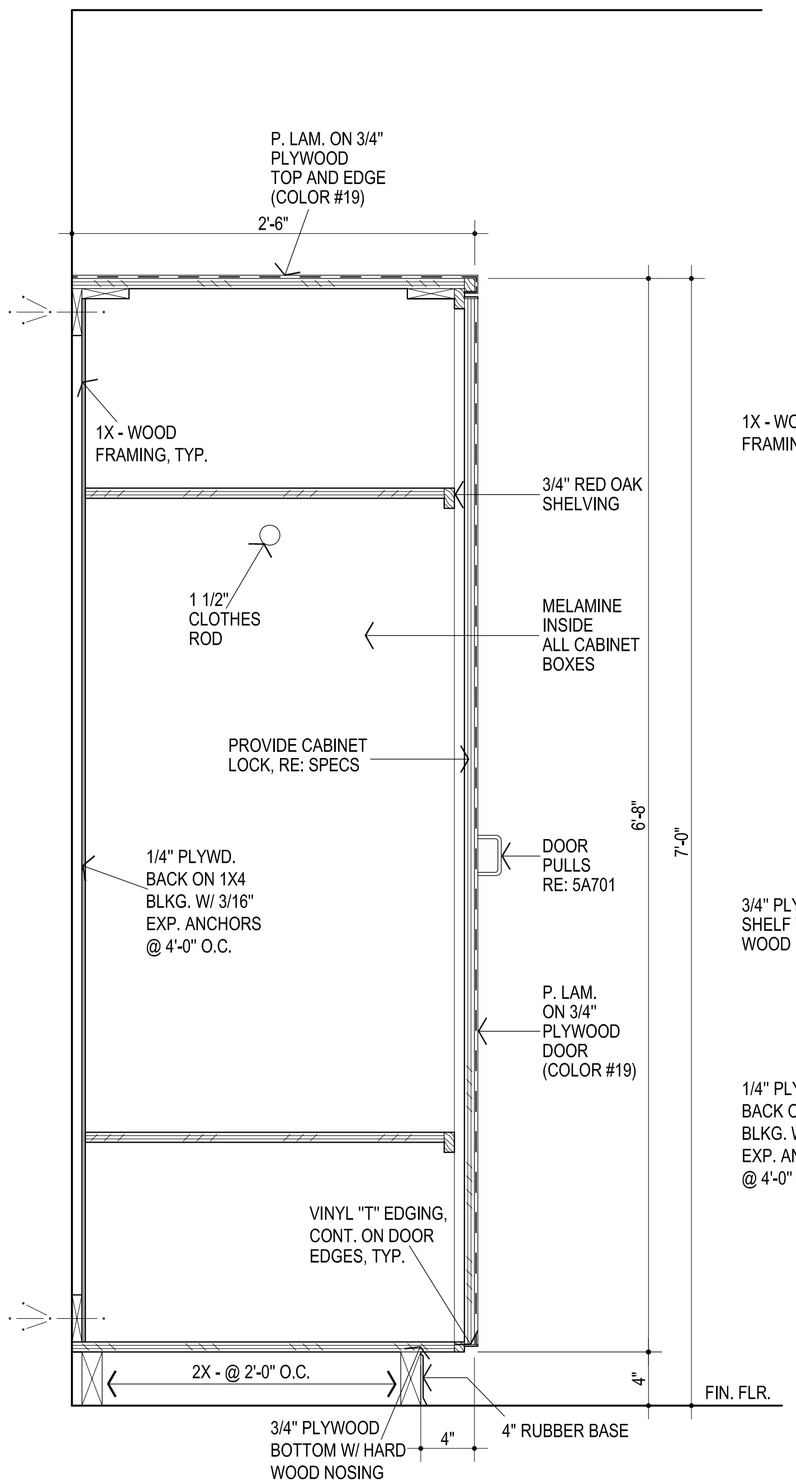

1 TEACHER'S CABINET

1 1/2" = 1'-0"

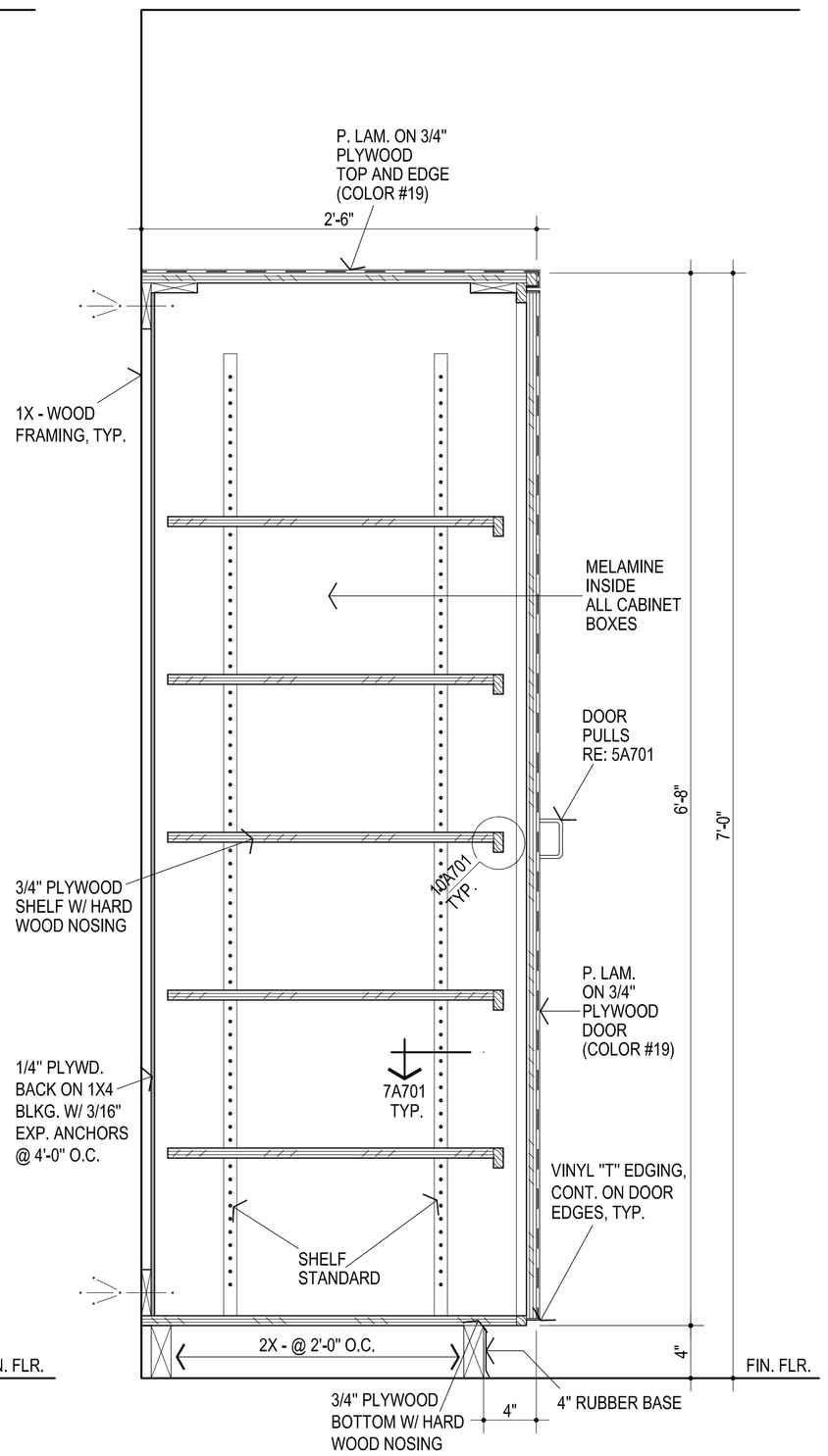

2 TALL CABINET

1 1/2" = 1'-0"

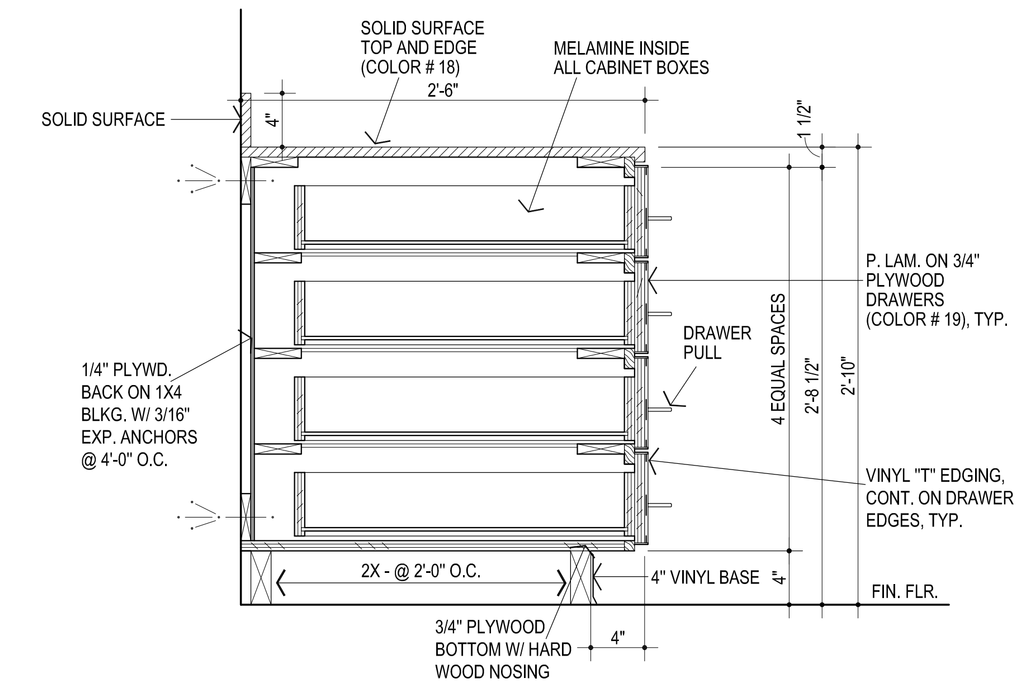

11 BASE CABINET W/DRAWERS

1 1/2" = 1'-0"

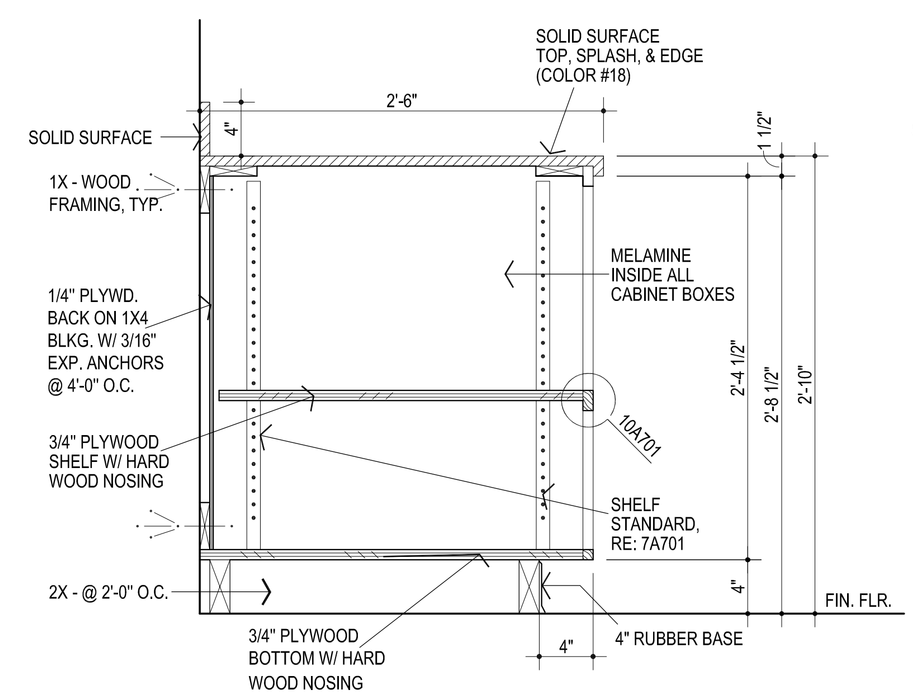

3 BASE CABINET

1 1/2" = 1'-0"

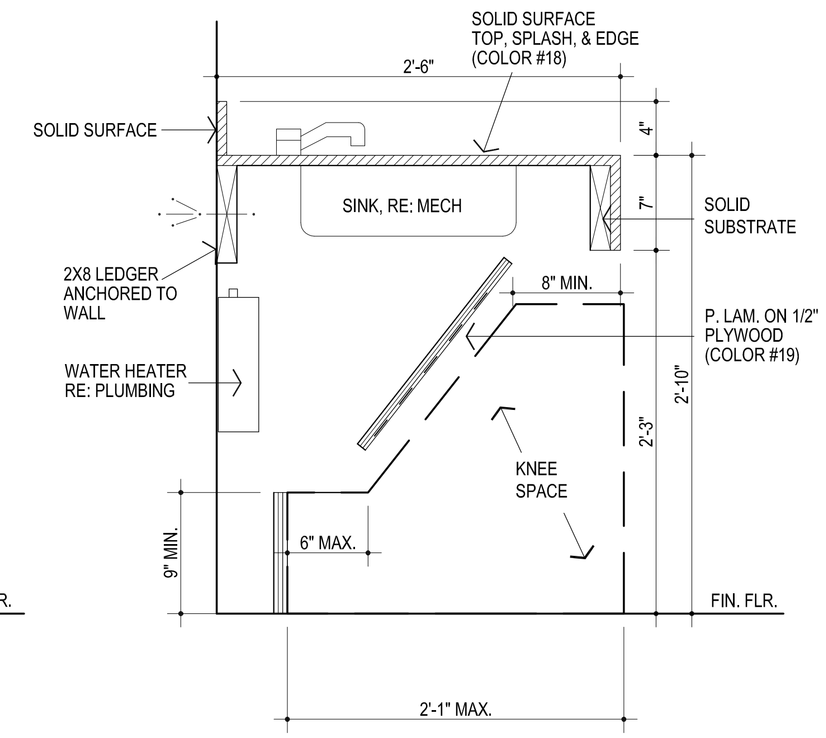

12 SINK SECTION

1 1/2" = 1'-0"

FRAMELESS CABINET / EUROPEAN CONSTRUCTION IS IS ACCEPTABLE

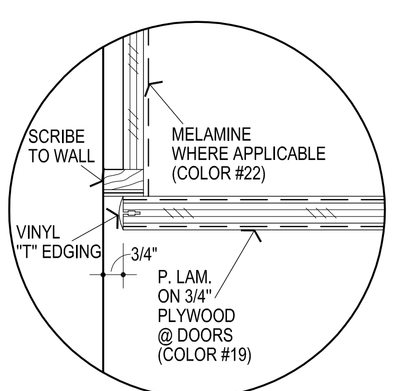

4 DOOR @ WALL

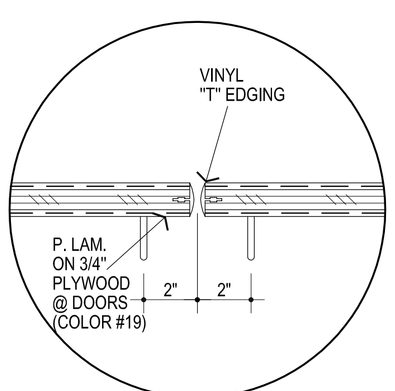

5 PULLS

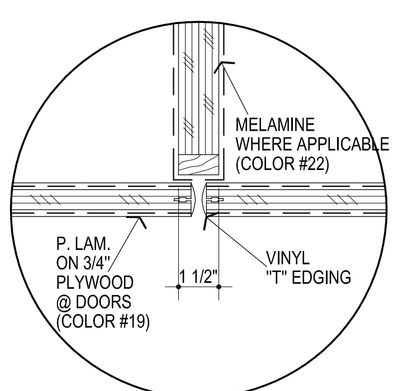

6 DOORS @ STILE

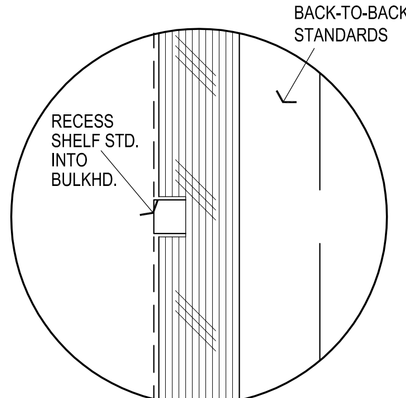

7 RECESSED STANDARDS

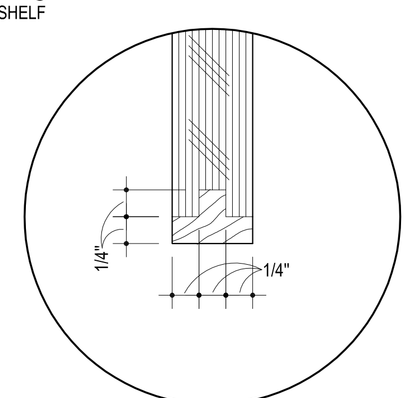

8 HARDWOOD EDGE

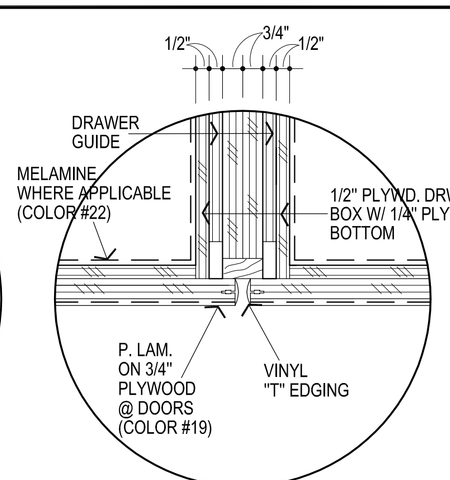

9 DRWR. TO DRWR.

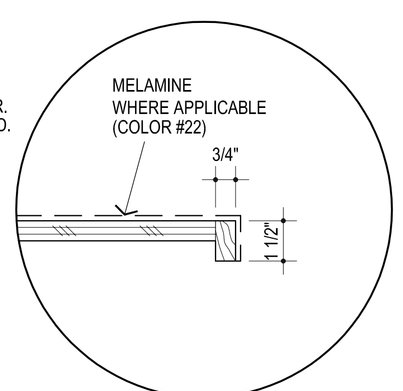

10 SHELF EDGE

AGP
the Abla Griffin Partnership L.L.C.
201 N. BROADWAY
SUITE 210
MOORE, OK. 73160
405.735.3477
AGP@theAGP.net
www.theAGP.net

CEDAR CREEK
CIVIL

KFC ENGINEERING
STRUCTURAL

SALAS O'BRIEN
MECHANICAL / ELECTRICAL

STATE OF OKLAHOMA
MICHAEL L. ABLA
2639
REGISTERED
7/31/23

CG
drawn by

MA
checked by

JULY 2023
date

revisions

MOORE PUBLIC SCHOOLS
BOARD OF EDUCATION
MOORE, OKLAHOMA

MOORE Public Schools
LEARNING FOR LIFE

CLASSROOM ADDITION
HIGHLAND WEST
JUNIOR HIGH SCHOOL

sheet no:

A701

OWNERSHIP USE OF DOCUMENTS:

AGP EXPRESSLY RESERVES ITS COPYRIGHT AND OTHER PROPERTY RIGHTS OF ALL PLANS AND DRAWINGS DESIGNED AND/OR PRODUCED. PLANS AND DRAWINGS ARE NOT TO BE REPRODUCED IN ANY FORM OR MANNER WITHOUT THE EXPRESSED WRITTEN CONSENT OF AGP.

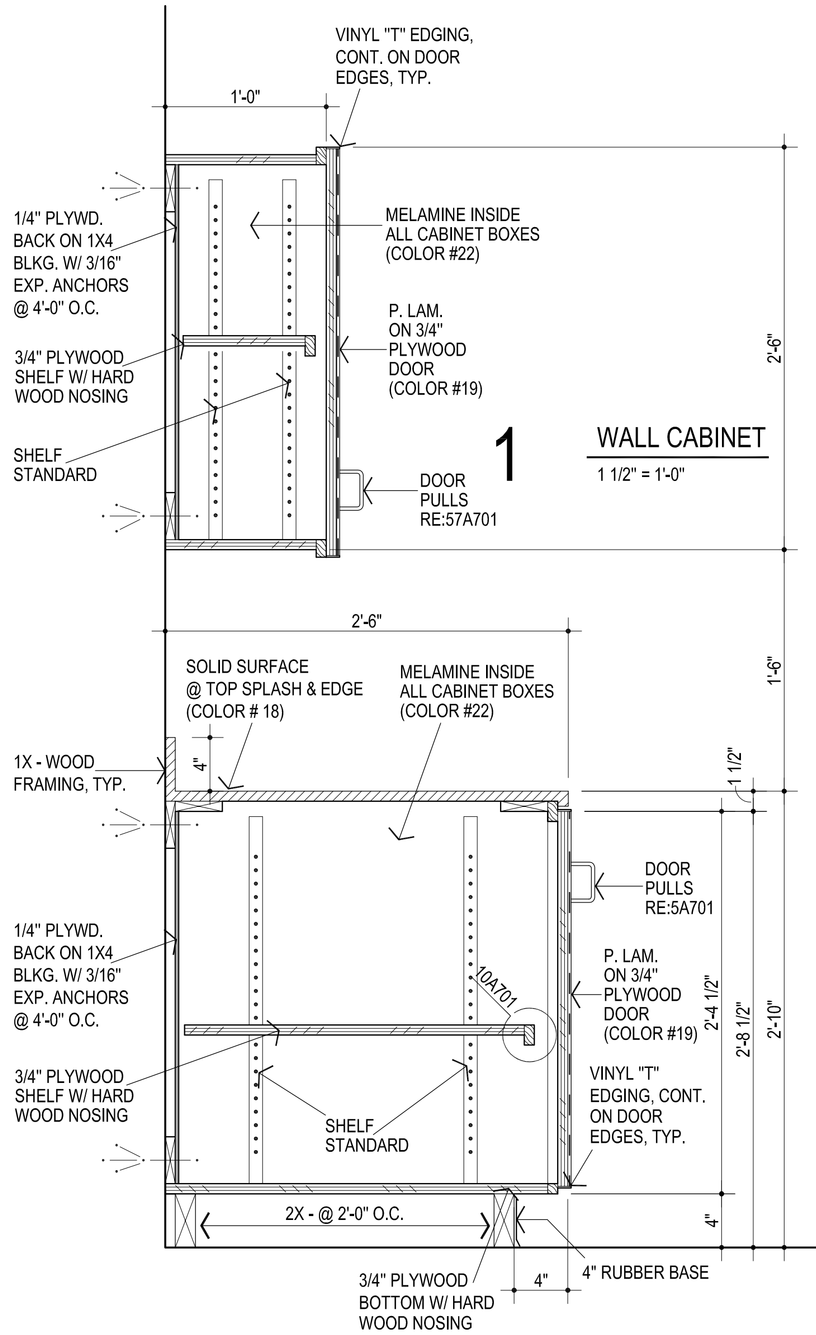

2 BASE CABINET
1 1/2" = 1'-0"

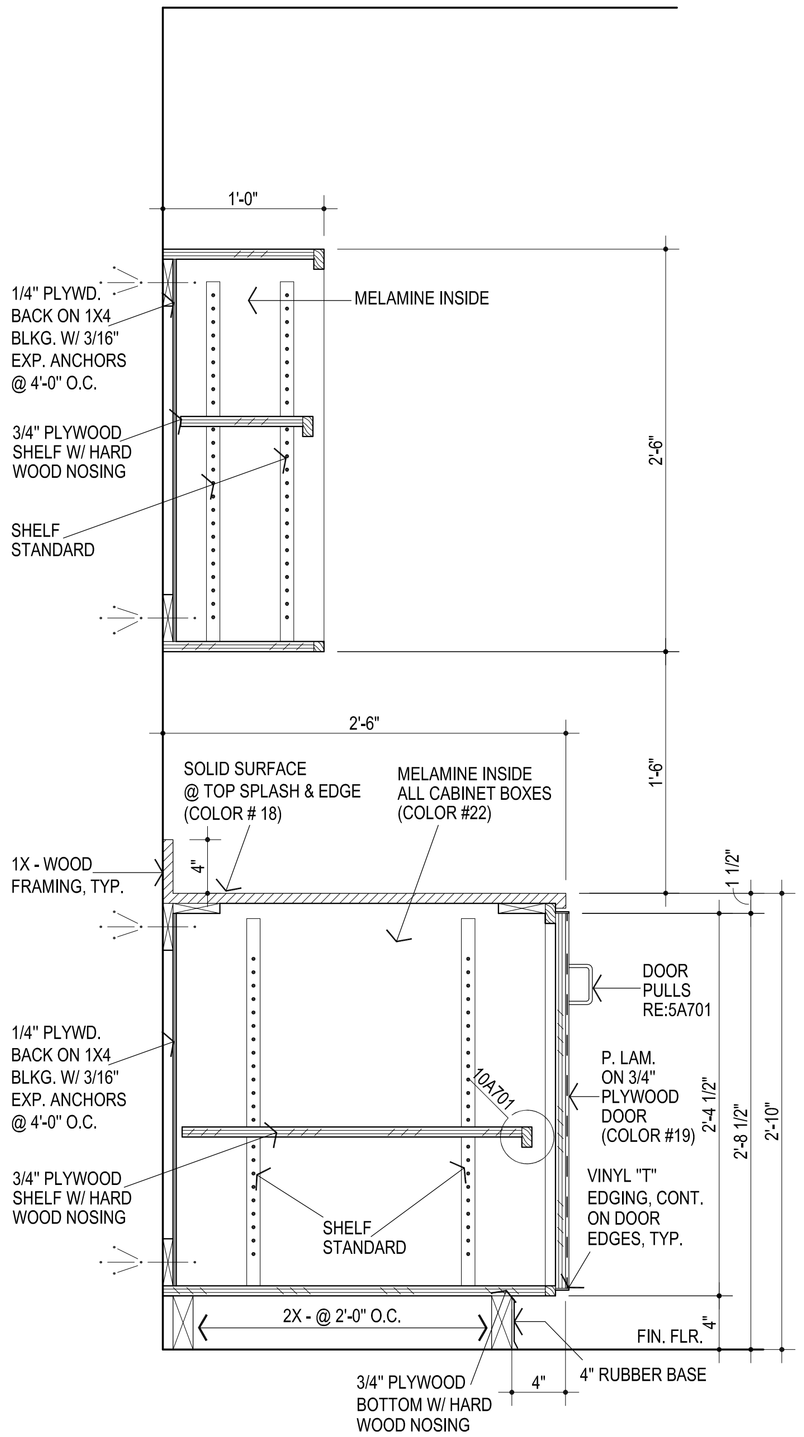

3 BASE & OPEN WALL CABINET
1 1/2" = 1'-0"

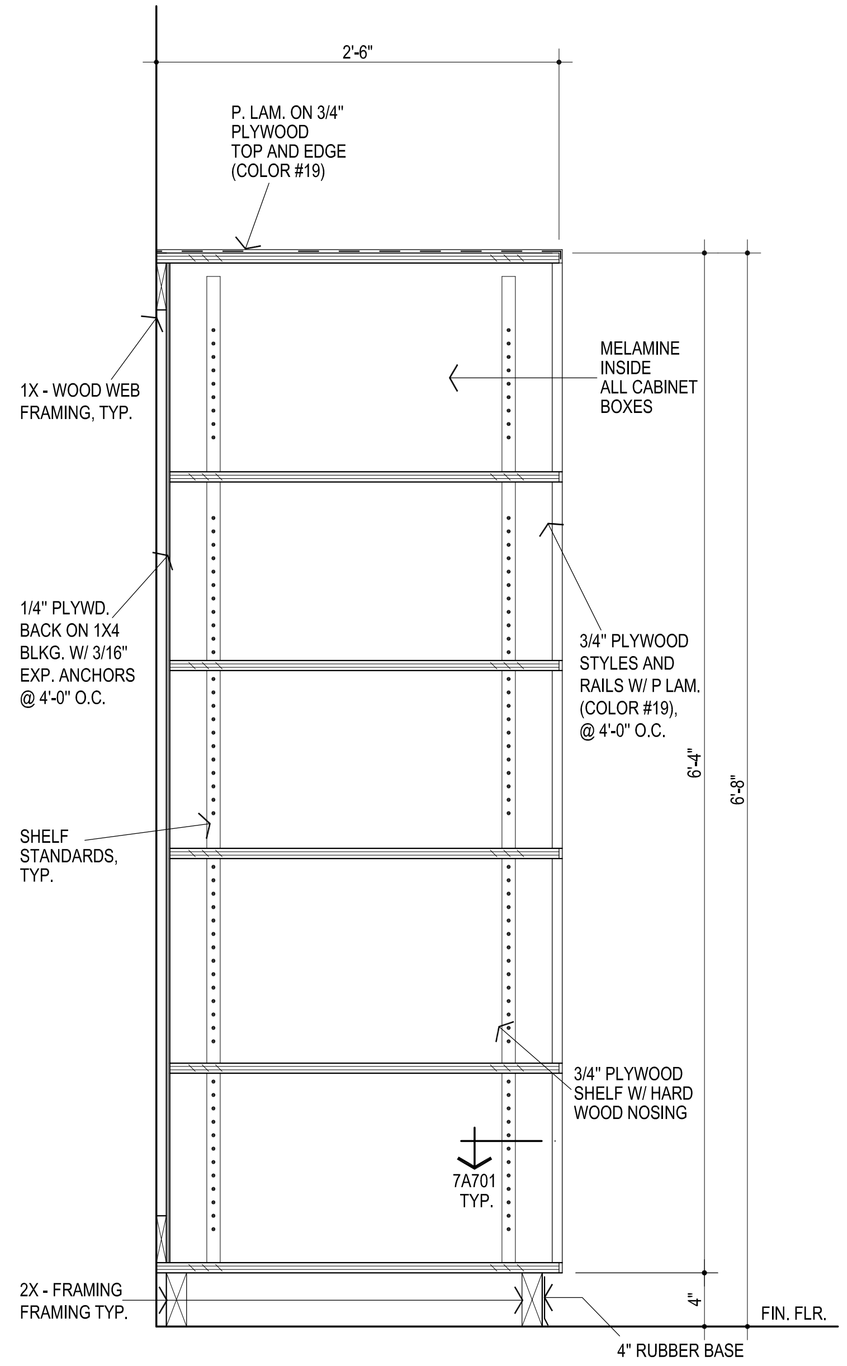

4 SHELVING
1 1/2" = 1'-0"

FRAMELESS CABINET / EUROPEAN CONSTRUCTION IS IS ACCEPTABLE

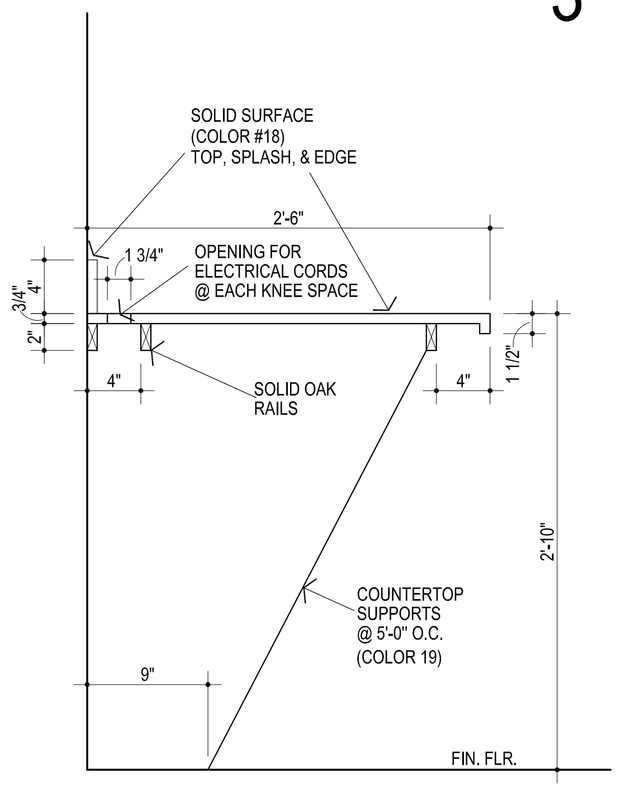

5 BASE CABINET W/ KNEE SPACE
1 1/2" = 1'-0"

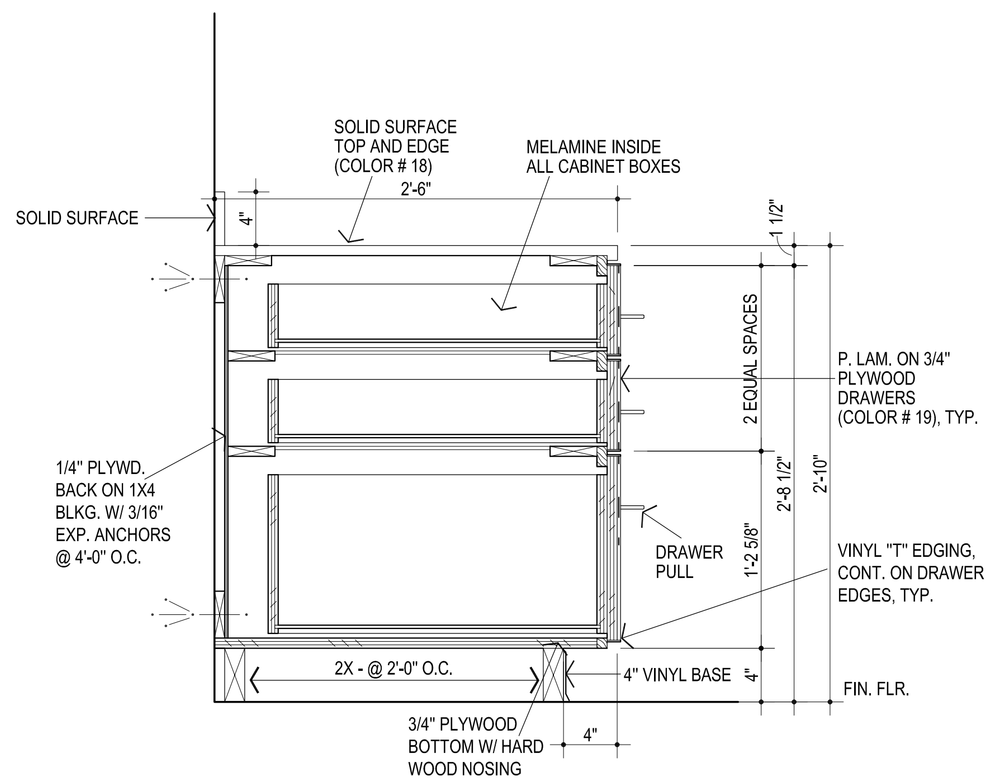

6 BASE CABINET W/ DRAWERS
1 1/2" = 1'-0"

AGP
the Abla Griffin Partnership L.L.C.
201 N. BROADWAY
SUITE 210
MOORE, OK. 73160
405.735.3477
AGP@theAGP.net
www.theAGP.net

CEDAR CREEK
CIVIL

KFC ENGINEERING
STRUCTURAL

SALAS O'BRIEN
MECHANICAL / ELECTRICAL

STATE OF OKLAHOMA
MICHAEL L. ABLA
2639
REGISTERED
7/31/23

CG
drawn by

MA
checked by

JULY 2023
date

revisions

MOORE PUBLIC SCHOOLS
BOARD OF EDUCATION
MOORE, OKLAHOMA

MOORE Public Schools
LEARNING FOR LIFE

CLASSROOM ADDITION
HIGHLAND WEST
JUNIOR HIGH SCHOOL

sheet no:

A702

OWNERSHIP USE OF DOCUMENTS:

AGP EXPRESSLY RESERVES ITS COPYRIGHT AND OTHER PROPERTY RIGHTS OF ALL PLANS AND DRAWINGS DESIGNED AND/OR PRODUCED. PLANS AND DRAWINGS ARE NOT TO BE REPRODUCED IN ANY FORM OR MANNER WITHOUT THE EXPRESSED WRITTEN CONSENT OF AGP.

FRAMELESS
CABINET / EUROPEAN
CONSTRUCTION IS
IS ACCEPTABLE

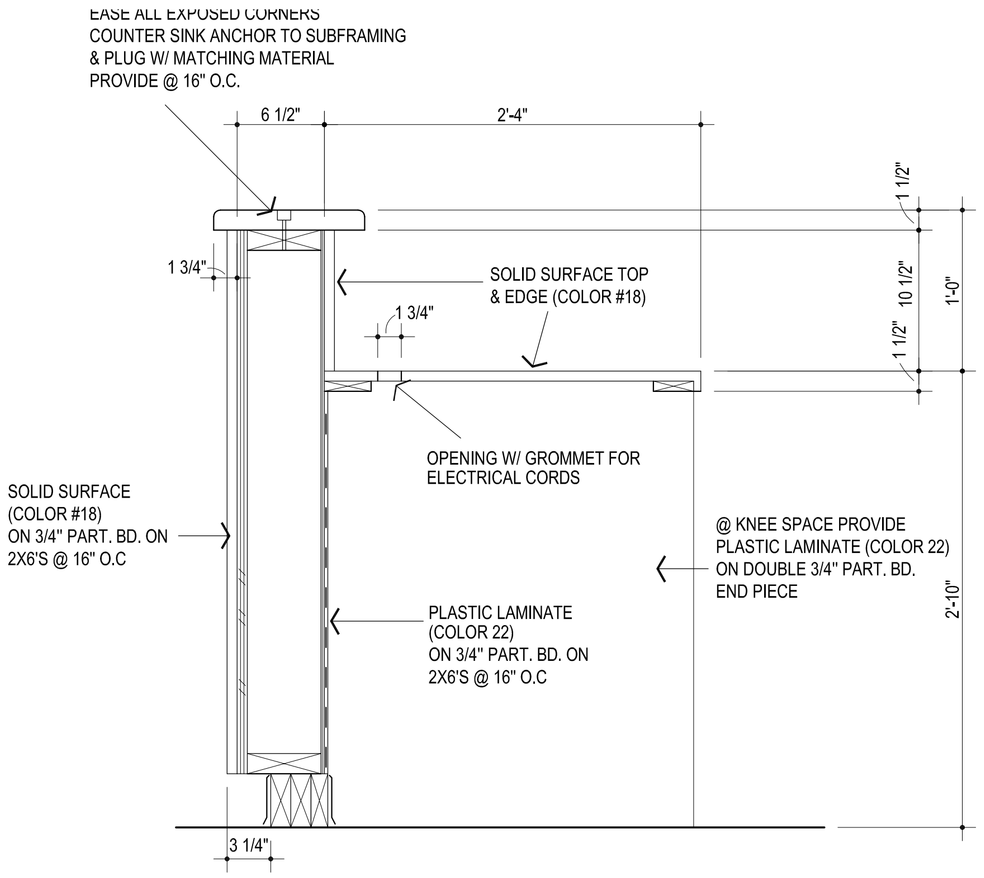

1 SECTION COUNTER
1 1/2" = 1'-0"

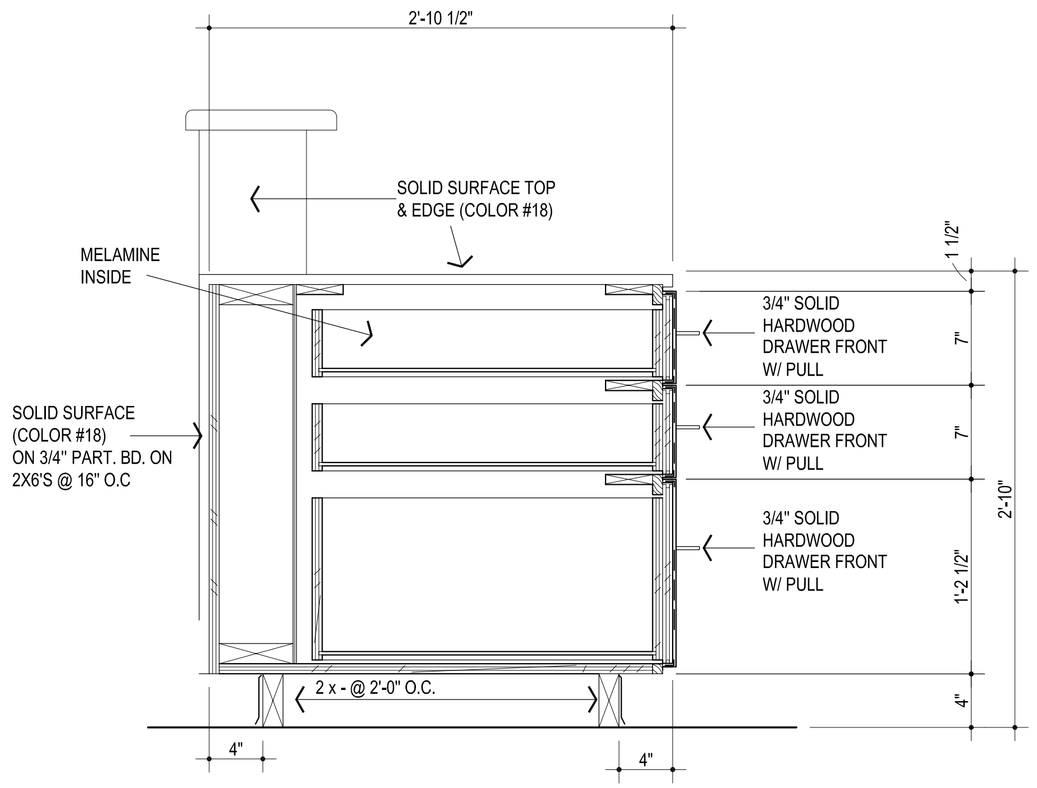

2 SECTION @ COUNTER
1 1/2" = 1'-0"

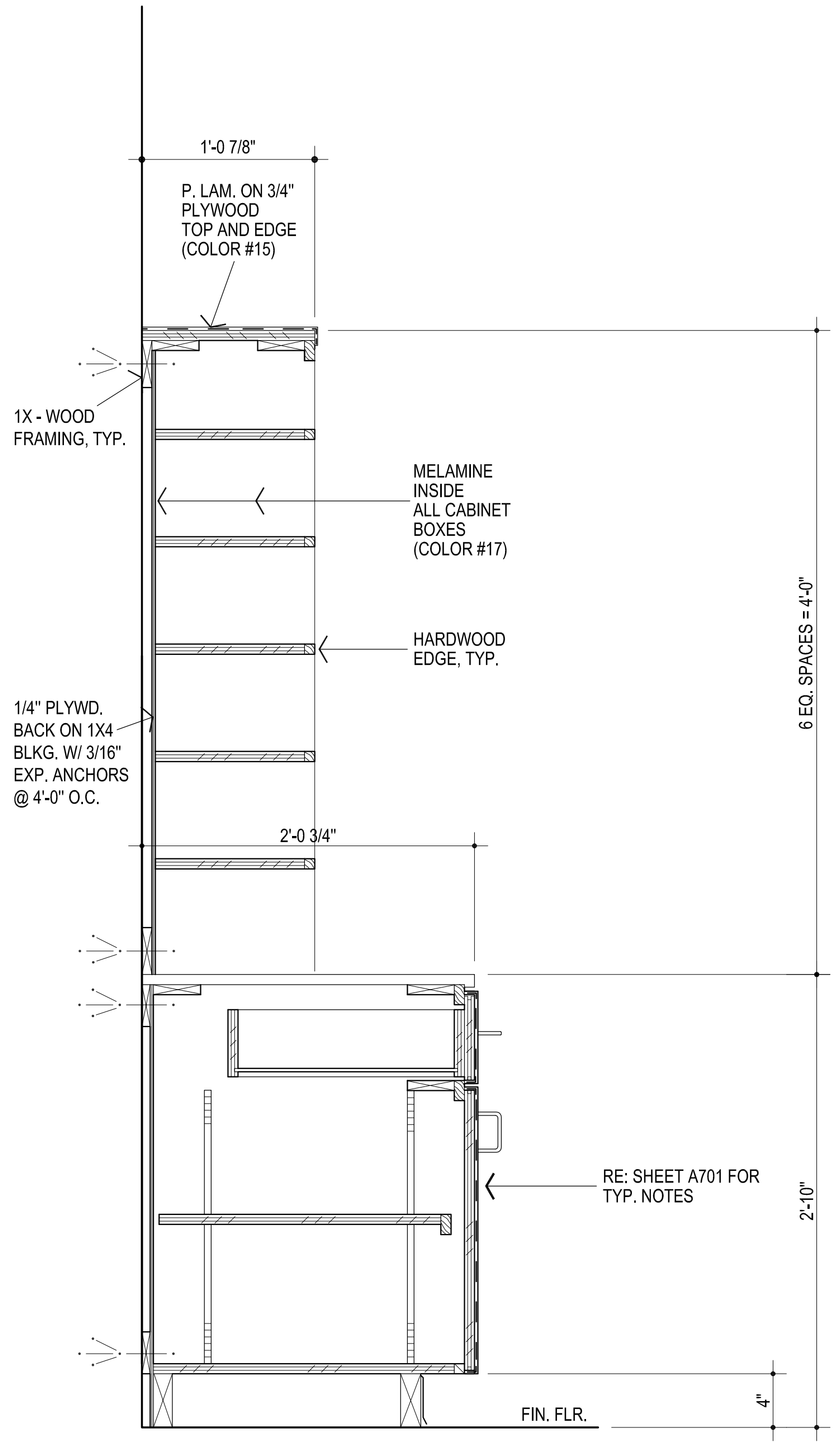

3 SECTION COUNTER
1 1/2" = 1'-0"

AGP
the Abla Griffin
Partnership L.L.C.

201 N. BROADWAY
SUITE 210
MOORE, OK. 73160
405.735.3477
AGP@theAGP.net
www.theAGP.net

CEDAR CREEK
CIVIL

KFC ENGINEERING
STRUCTURAL

SALAS O'BRIEN
MECHANICAL / ELECTRICAL

STATE OF OKLAHOMA
MICHAEL L. ABLA 2639
REGISTERED ARCHITECT
7/31/23

CG
drawn by

MA
checked by

JULY 2023
date

revisions

MOORE PUBLIC SCHOOLS
BOARD OF EDUCATION
MOORE, OKLAHOMA

MOORE Public Schools
LEARNING FOR LIFE

CLASSROOM ADDITION
HIGHLAND WEST
JUNIOR HIGH SCHOOL

sheet no:

A703

OWNERSHIP USE OF DOCUMENTS:

AGP EXPRESSLY RESERVES ITS COPYRIGHT AND OTHER PROPERTY RIGHTS OF ALL PLANS AND DRAWINGS DESIGNED AND/OR PRODUCED. PLANS AND DRAWINGS ARE NOT TO BE REPRODUCED IN ANY FORM OR MANNER WITHOUT THE EXPRESSED WRITTEN CONSENT OF AGP.

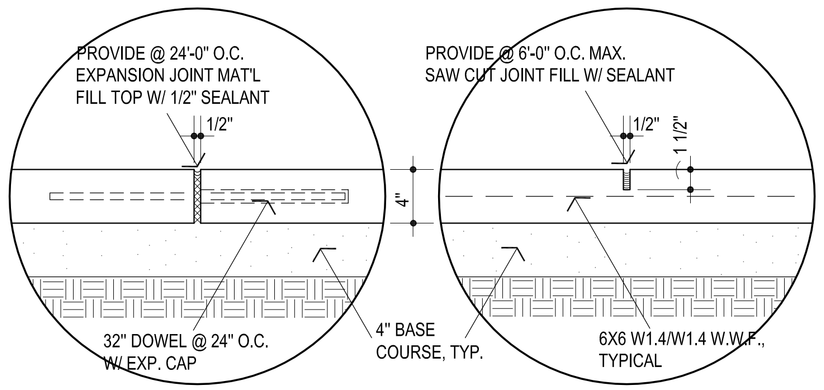

1 SIDEWALK EXP. JOINT

2 SIDEWALK CONTROL JT.

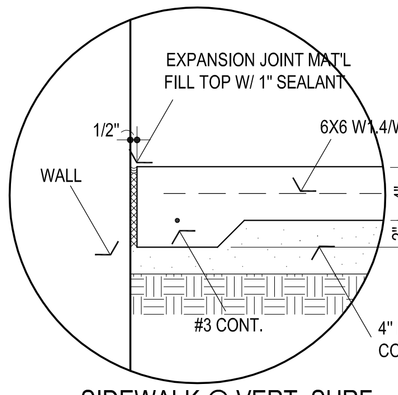

3 SIDEWALK @ VERT. SURF.

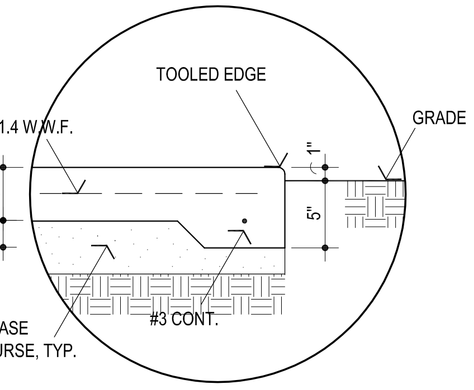

4 SIDEWALK EDGE

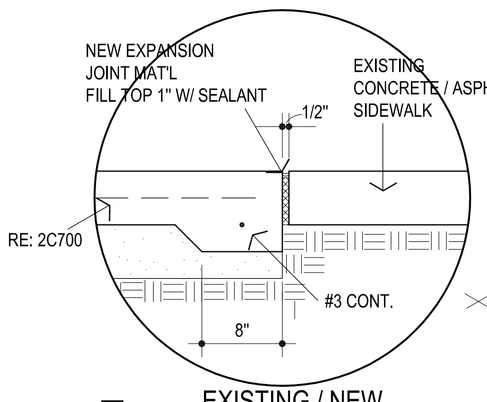

5 EXISTING / NEW CONCRETE SIDEWALK

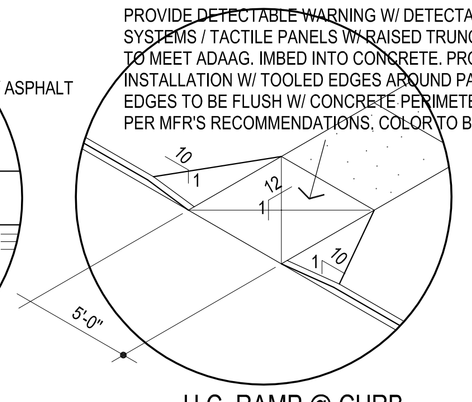

6 H.C. RAMP @ CURB

NOT TO SCALE

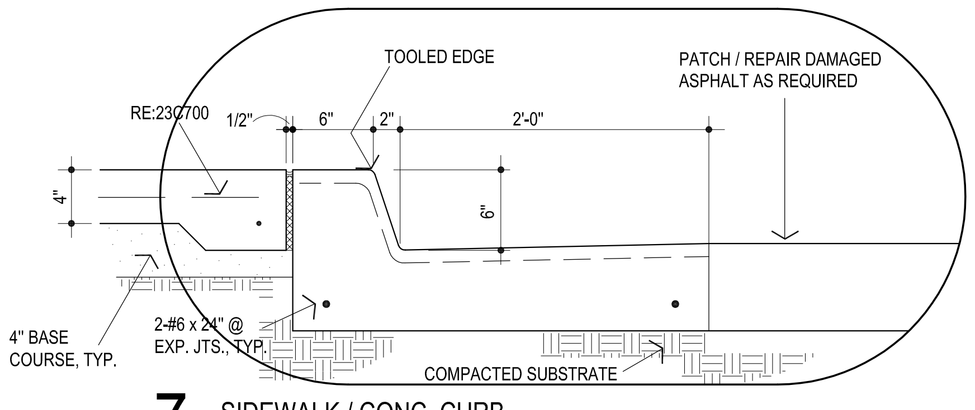

7 SIDEWALK / CONC. CURB

AGP
the Abla Griffin Partnership L.L.C.
201 N. BROADWAY
SUITE 210
MOORE, OK. 73160
405.735.3477
AGP@theAGP.net
www.theAGP.net

CEDAR CREEK
CIVIL

KFC ENGINEERING
STRUCTURAL

SALAS O'BRIEN
MECHANICAL / ELECTRICAL

STATE OF OKLAHOMA
MICHAEL L. ABLA
2639
REGISTERED ARCHITECT
7/31/23

CG
drawn by

MA
checked by

JULY 2023
date

revisions

MOORE PUBLIC SCHOOLS
BOARD OF EDUCATION
MOORE, OKLAHOMA

MOORE Public Schools
LEARNING FOR LIFE

CLASSROOM ADDITION
HIGHLAND WEST
JUNIOR HIGH SCHOOL

sheet no:

C700

OWNERSHIP USE OF DOCUMENTS:

AGP EXPRESSLY RESERVES ITS COPYRIGHT AND OTHER PROPERTY RIGHTS OF ALL PLANS AND DRAWINGS DESIGNED AND/OR PRODUCED. PLANS AND DRAWINGS ARE NOT TO BE REPRODUCED IN ANY FORM OR MANNER WITHOUT THE EXPRESSED WRITTEN CONSENT OF AGP.

LIGHT FIXTURE SCHEDULE

TYPE	SYMBOL	DESCRIPTION	MANUFACTURER	REFERENCE CATALOG #
A		2X4 FLAT PANEL FIXTURE. 38W, 4960 LUMENS, 3500K CCT, 80 CRI. 0–10V–10% DIMMING RANGE.	LITHIONIA	2BLT4 48L ADP GZ1 LP835
AE		2X4 FLAT PANEL FIXTURE. 38W, 4960 LUMENS, 3500K CCT, 80 CRI. 0–10V–10% DIMMING RANGE. 10 EMG BATTERY – SELF–DIAGNOSTIC.	LITHIONIA	2BLT4 48L ADP GZ1 LP835
C		6" LED DOWNLIGHT FIXTURE. 19W, 2011 LUMENS, 3500K CCT, 80 CRI. WET LISTED, 0–10V–1% DIMMING RANGE.	LITHONIA	LBR6 ALO2 SWW1 AR LSS WD MVOLT UGZ / LBR6PFSW
CE		6" LED DOWNLIGHT FIXTURE. 19W, 2011 LUMENS, 3500K CCT, 80 CRI. WET LISTED, 0–10V–1% DIMMING RANGE.	LITHONIA	LBR6 ALO2 SWW1 AR LSS WD MVOLT UGZ E10WCP/ LBR6PFSW
D		2' LED STRIP FIXTURE. 24W, 2742 LUMENS, 3500K CCT 80CRI. 0–10V–10% DIMMING RANGE.	LIHTONIA	ZL1D L24 2500LM FST MVLOT 35K 80 CRI WH
EX		LED EXIT SIGN, BRUSHED ALUMINUM FACE WITH RED LETTERS, UNIVERSAL FACE, EMG BATTERY.	LIFE SAFETY	LSXLPDC 1 R A EM
EX1		LED EXIT SIGN, BRUSHED ALUMINUM FACE WITH RED LETTERS, UNIVERSAL FACE, EMG BATTERY.	LIFE SAFETY	LSXLPDC 2 R A EM
F		2' LINEAR WALL FIXTURE. 2.5"W x 3.75"T/ DIRECT/ 1000LMF/ 9.3WFT/ 3500K CCT 80CRI. 0–10V–1% DIMMING RANGE.	MARK LTG	S2LWD LCB 2FT MSL2 80CRI 35K 1000LMF MIN1 MVOLT WHT ZT
LE		6' EXTERIOR LINEAR LED FIXTURE. 60W, 580 LUMENS/FT, 4000K CCT. MULLION MOUNTED. WET LOCATION LISTED. PROVIDE WITH 90 MIN BATTERY BACKUP.	ALIGHT	ALD2ST 6 ILS 40 U ASY M DARK BRONZE 1 D E Q
S		4' LENSED STRIP FIXTURE. 48W, 5456 LUMENS, 3500K CCT, 80CRI. 0–10V–10% DIMMING RANGE.	LITHONIA	ZL1D L48 5000LM FST MVOLT 35K 80CRI WH
SE		4' LENSED STRIP FIXTURE. 48W, 5456 LUMENS, 3500K CCT, 80CRI. 0–10V–10% DIMMING RANGE. 10W EMG BATTERY SELF–DIAGNOSTIC .	LITHONIA	ZL1D L48 5000LM FST MVOLT 35K 80CRI E10WLCP WH
W		EXTERIOR LED WALL PACK. 35W, 4412 LUMENS, 4000K CCT, 80CRI. WET LOCATION.	LITHONIA	WDGE2 LED P4 40K 80CRI VF MVOLT SRM E10WH DDBXD
W2		LED ARCHITECTURAL WALL PACK. 9W, 530 LUMENS, 4000K CCT, 80CRI. WET LOCATION RATED.	LITHONIA	OLLWD LED P1 40K MVOLT DDB
WE		EXTERIOR LED WALL PACK. 35W, 4412 LUMENS, 4000K CCT, 80CRI. 10W EMG BATTERY.	LITHONIA	WDGE2 LED P4 40K 80CRI VF MVOLT SRM E10WH DDBXD

GENERAL NOTES:
EQUIVALENT ALTERNATE LIGHT FIXTURES MAY BE PROVIDED FOR BIDDING PURPOSES. THE ENGINEER DOES NOT TAKE RESPONSIBILITY FOR ENSURING ALTERNATE LIGHT FIXTURES USED FOR BIDDING ARE EQUAL; THE CONTRACTOR SHALL BE RESPONSIBLE FOR ENSURING ALTERNATE FIXTURES ARE EQUIVALENT TO THOSE SPECIFIED PRIOR TO BID. THE WINNING BID PACKAGE SHALL BE SUBMITTED TO THE ENGINEER FOR REVIEW IN ACCORDANCE WITH THE SPECIFICATIONS.

SWITCH LEGEND

SYMBOL	DESCRIPTION
$	20A, 120/277V SPST SWITCH
$B	20A, 120/277V LETTER INDICATES GROUP
$3	20A, 120/277V 3–WAY
$4	20A, 120/277V 4–WAY
$D	DIMMER SWITCH
$K	KEY OPERATED SWITCH
$OC	OCCUPANCY SENSOR SWITCH

GENERAL NOTE:
SEE SPECIFICATIONS FOR MANUFACTURERS

OCC SENSOR SCHEDULE

SYMBOL	DESCRIPTION
OS	MULTI–TECHNOLOGY, CEILING MOUNTED OCCUPANCY SENSOR CAPABLE OF DISABLING AUTO ADAPTING FEATURE. PROVIDE WITH RELAY/POWER PACKS AS REQUIRED PER PLAN. (LOW VOLTAGE)

GENERAL NOTES:

1. E.C. SHALL CONTACT ARCHITECT FOR COLOR SELECTION PRIOR TO ORDER OF ANY SENSOR.

2. FOR CEILING SPACES 14 FT. A.F.F. PIR TYPE CEILING MOUNTED SENSORS SHALL BE USED.

3. WALL MOUNTED DEVICES TO MATCH MANUAL LIGHTING CONTROL.

RECEPTACLE SCHEDULE

SYMBOL	DESCRIPTION
	DUPLEX RECEPTACLE
	20A, 120V, 2P, 3W GROUNDING DUPLEX RECEPTACLE RECEPTACLE MTD. 6" ABOVE COUNTER OR HGT SHOWN
	DUPLEX RECEPTACLE, CEILING MOUNTED
	GFCI RECEPTACLE
	GFCI RECEPTACLE, MTD. 6" ABOVE COUNTER OR HGT SHOWN
	20A, 120V, 2P, 3W GROUNDING DUPLEX GFCI RECEPTACLE – WEATHER PROOF (IN USE COVER)
J	JUNCTION BOX, AS NOTED
	QUADPLEX RECEPTACLE

GENERAL NOTE:
SEE SPECIFICATIONS FOR MANUFACTURERS

ELECTRICAL ABBREVIATIONS

AC	ABOVE COUNTERTOP	MC	MECHANICAL CONTRACTOR
AFF	ABOVE FINISH FLOOR	MCA	MINIMUM CIRCUIT AMPS
AFG	ABOVE FINISH GRADE	MDP	MAIN DISTRIBUTION PANEL
ANNC	ANNUNICIATOR	MTD	MOUNTED
CC	CONTROLS CONTRACTOR	NIC	NOT IN CONTRACT
DF	DRINKING FOUNTAIN	OCC	OCCUPANCY
EC	ELECTRICAL CONTRACTOR	PC	PLUMBING CONTRACTOR
EF	EXHAUST FAN	PNL	PANEL
EX	EXISTING	SPST	SINGLE POLE SINGLE THROW
EXR	EXISTING RELOCATED	TTB	TELEPHONE TERMINAL BOARD
GC	GENERAL CONTRACTOR	TYP	TYPICAL
GFI	GROUND FAULT INTERRUPT	WG	WIRE GUARD
HP	HORSEPOWER	WP	WEATHER PROOF
IBC	INTERNATIONAL BUILDING CODE	20A	20 AMP
IG	ISOLATED GROUND	ø	PHASE
LV	LOW VOLTAGE	3W	3 WIRE
LVRP	LV RELAY PANEL	1P20A	SINGLE POLE 20 AMP

ELECTRICAL LEGEND

	PANEL BOARD
	DISTRIBUTION PANEL BOARD
T	TRANSFORMER
	UTILITY METER
CB	SEPARATE CIRCUIT BREAKER
	DISCONNECT
	FUSED DISCONNECT SWITCH
	EMERGENCY FUSED DISCONNECT SWITCH
	MOTOR STARTER/CONTRACTOR
	COMBINATION MOTOR STARTER
	PUSH BUTTON STATION AS NOTED
P	PULL BOX, SIZE AS REQUIRED BY CODE
	ELECTRICAL CONNECTION
	MOTOR CONNECTION
	HOME RUN TO PANEL BOARD

GENERAL ELECTRICAL NOTES

1. CONTRACTOR TO VERIFY EXISTING ELECTRICAL CONDITIONS AND NOTIFY ARCHITECT/ENGINEER OF ANY ELECTRICAL OR CODE ISSUES PRIOR TO BID. CONTRACTOR IS RESPONSIBLE FOR PROVIDING A COMPLETE AND OPERATIONAL CODE COMPLIANT SYSTEM.

2. ALL WORK SHALL BE IN CONFORMANCE WITH NATIONAL, STATE, AND LOCAL CODES AND/OR ORDINANCES.

3. ELECTRICAL CONTRACTOR SHALL COORDINATE WORK WITH ALL OTHER CONTRACTORS & LOCAL UTILITY. E.C. SHALL CONTACT LOCAL UTILITY FOR EXACT SERVICE REQUIREMENTS TO INCLUDE BUT NOT LIMITED TO TRANSFORMER, METERING AND CABLING. LOCAL UTILITY REQUIREMENTS SUPERSEDE DRAWINGS AND SPECIFICATIONS.

4. SEE ARCHITECTURAL, MECHANICAL, & PLUMBING DRAWINGS FOR ADDITIONAL REQUIREMENTS.

5. WHERE NEW OR EXISTING WIRING FOR INTERIOR DATA OR POWER WILL BE EXPOSED, SURFACE MOUNTED RACEWAY EQUAL TO WIREMOLD SERIES 5400 SHALL BE USED. SURFACE BOXES SHALL MATCH SURFACE RACEWAY. ALL PARTS AND ACCESSORIES SHALL BE INSTALLED FOR A COMPLETE SYSTEM. WHERE BOTH DATA AND POWER WIRING SHARE THE SAME RACEWAY, POWER WIRING SHALL BE SEPARATED FROM DATA WIRING AS PER NEC.

6. ELECTRICAL DRAWINGS ARE DIAGRAMMATIC ONLY. THEY ARE INTENDED TO GIVE APPROXIMATE LOCATIONS AND OVERALL DESIGN INTENT. THE ELECTRICAL CONTRACTOR SHALL BE RESPONSIBLE FOR PRODUCTS, MATERIALS, AND ELECTRICAL METHODS WHICH HAVE NOT BEEN SHOWN OR INDICATED BUT ARE REQUIRED FOR A COMPLETE SYSTEM TO THE STANDARDS OF THE INDUSTRY.

7. INSTALL LIGHTING FIXTURES IN ACCORDANCE WITH MANUFACTURER'S RECOMMENDATIONS. PROVIDE SUPPORTING DEVICES FOR ADEQUATE SUPPORT OF FIXTURES FROM STRUCTURE.

8. UPON COMPLETION OF THE ELECTRICAL WORK, THE INSTALLATION SHALL BE TESTED FOR CONTINUITY, GROUNDS, AND SHORT CIRCUITS. THE ELECTRICAL CONTRACTOR SHALL DEMONSTRATE PROPER PERFORMANCE OF ALL SYSTEMS. ALL DEFECTIVE WORK OR MATERIALS SHALL BE REPLACED OR REPAIRED AS NECESSARY AND RETESTED.

9. ELECTRICAL RACEWAYS THAT PENETRATE FIRE RATED ASSEMBLIES SHALL BE SLEEVED AND SEALED AS PER THE LOCAL BUILDING CODE.

10. THE ELECTRICAL CONTRACTOR SHALL PROVIDE A TEMPORARY ELECTRICAL SYSTEM FOR THE PROJECT. AT LEAST ONE 120 VOLT SINGLE PHASE RECEPTACLE SHALL BE PROVIDED FOR EACH 500 SQUARE FEET OF FLOOR SPACE. SUFFICIENT TEMPORARY LIGHTING SHALL BE PROVIDED TO ALLOW ALL CONTRACTORS TO COMPLETE THEIR WORK. TEMPORARY ELECTRICAL CIRCUITS SHALL BE EQUIPPED WITH COMBINATION GROUND FAULT INTERRUPTER AND CIRCUIT BREAKER PER NEC. TEMPORARY ELECTRICAL SYSTEM SHALL BE INCLUDED IN THIS BID. USAGE CHARGES SHALL BE PAID FOR BY THE GENERAL CONTRACTOR.

ELECTRICAL SHEET INDEX

E000	ELECTRICAL TITLE SHEET
E001	ELECTRICAL SITE PLAN
E002	ELECTRICAL LIGHTING PLAN – OVERALL VIEW
E101	ELECTRICAL LIGHTING PLAN – AREA A
E102	ELECTRICAL LIGHTING PLAN – AREA B
E103	ELECTRICAL LIGHTING PLAN – AREA C
E104	ELECTRICAL LIGHTING PLAN – AREA D
E200	ELECTRICAL POWER PLAN – OVERALL VIEW
E201	ELECTRICAL POWER PLAN – AREA A
E202	ELECTRICAL POWER PLAN – AREA B
E203	ELECTRICAL POWER PLAN – AREA C
E204	ELECTRICAL POWER PLAN – AREA D
E210	ELECTRICAL POWER PLAN – SITE ROOF
E211	ELECTRICAL POWER PLAN ROOF – OVERALL VIEW
E401	ELECTRICAL ONE–LINE DIAGRAM
E501	ELECTRICAL DETAILS SHEET
E601	ELECTRICAL SCHEDULES SHEET

AGP
the Abla Griffin Partnership L.L.C.
201 N. BROADWAY
SUITE 210
MOORE, OK. 73160
405.735.3477
AGP@theAGP.net
www.theAGP.net

CEDAR CREEK
CIVIL

KFC ENGINEERING
STRUCTURAL

SALAS O'BRIEN
MECHANICAL / ELECTRICAL

GT
drawn by

TVO
checked by

JULY 2023
date

revisions

MOORE PUBLIC SCHOOLS
BOARD OF EDUCATION
MOORE, OKLAHOMA

MOORE Public Schools
LEARNING FOR LIFE

CLASSROOM ADDITION
HIGHLAND WEST
JUNIOR HIGH SCHOOL

sheet no:

E000

Salas O'Brien
2600 Van Buren St., Suite 2635
Norman, OK 73072
Salas O'Brien Registration: CA# 7058
Expiration Date : 6/30/2025
Salas O'Brien Project Number: 2023-02792-00

OWNERSHIP USE OF DOCUMENTS:

AGP EXPRESSLY RESERVES ITS COPYRIGHT AND OTHER PROPERTY RIGHTS OF ALL PLANS AND DRAWINGS DESIGNED AND/OR PRODUCED. PLANS AND DRAWINGS ARE NOT TO BE REPRODUCED IN ANY FORM OR MANNER WITHOUT THE EXPRESSED WRITTEN CONSENT OF AGP.

GENERAL NOTES

1. EC SHALL FIELD VERIFY EXISTING CONDITIONS PRIOR TO ALL WORK.
2. CONDUIT ROUTE SHOWN IS ONLY TO CONVEY DESIGN INTENT. EC SHALL DETERMINE FINAL ROUTING OF NEW CONDUIT AFTER FIELD VERIFYING EXISTING CONDITIONS.
3. EC SHALL PROVIDE PERMANENT LABELING OF SERVICE ENTRANCE LOCATIONS AT BOTH EXISTING AND NEW MDP.

KEYED NOTES

(1) APPROXIMATE ROUTING FOR UNDERGROUND FEED SERVING NEW PANEL 'L3' FROM NEW PANEL 'MDP'. COORDINATE FINAL ROUTING WITH ARCHITECT, CIVIL, AND OTHER TRADES PRIOR TO BEGINNING WORK. REFER TO SHEET 'E401' FOR ADDITIONAL INFORMATION.

(2) PROPOSED LOCATION OF NEW UTILITY TRANSFORMER FEEDING ADDITION. COORDINATE FINAL LOCATION WITH ARCHITECT, CIVIL, AND UTILITY PRIOR TO BEGINNING WORK.

(3) APPROXIMATE LOCATION OF EXISTING UTILITY TRANSFORMER SERVING SCHOOL. SHOWN FOR REFERENCE ONLY.

NO WORK

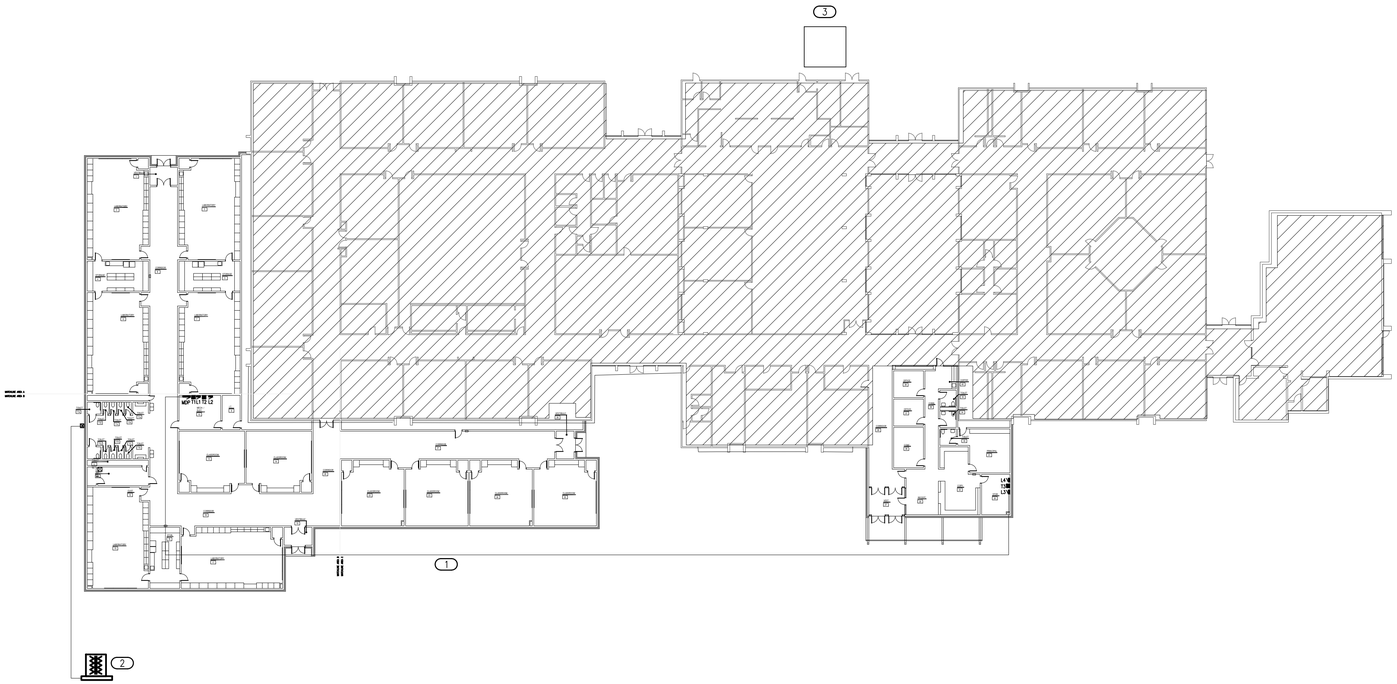

1 ELECTRICAL SITE PLAN

SCALE: 1/32" = 1'-0"

NORTH

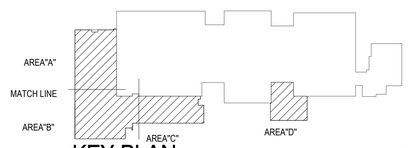

KEY PLAN

NORTH

Salas O'Brien

2600 Van Buren St., Suite 2635
Norman, OK 73072
Salas O'Brien Registration: CA# 7058
Expiration Date : 6/30/2025

Salas O'Brien Project Number: 2023-02792-00

AGP
the Abla Griffin Partnership L.L.C.

201 N. BROADWAY
SUITE 210
MOORE, OK. 73160
405.735.3477
AGP@theAGP.net
www.theAGP.net

CEDAR CREEK
CIVIL

KFC ENGINEERING
STRUCTURAL

SALAS O'BRIEN
MECHANICAL / ELECTRICAL

REGISTERED PROFESSIONAL ENGINEER
TIMOTHY VAN OSTRAN
22659
08/18/23
OKLAHOMA

GT
drawn by

TVO
checked by

JULY 2023
date

revisions

MOORE PUBLIC SCHOOLS
BOARD OF EDUCATION
MOORE, OKLAHOMA

MOORE Public Schools
LEARNING FOR LIFE

CLASSROOM ADDITION
HIGHLAND WEST
JUNIOR HIGH SCHOOL

sheet no:

E001

OWNERSHIP USE OF DOCUMENTS:

AGP EXPRESSLY RESERVES ITS COPYRIGHT AND OTHER PROPERTY RIGHTS OF ALL PLANS AND DRAWINGS DESIGNED AND/OR PRODUCED. PLANS AND DRAWINGS ARE NOT TO BE REPRODUCED IN ANY FORM OR MANNER WITHOUT THE EXPRESSED WRITTEN CONSENT OF AGP.

LIGHTING GENERAL NOTES

1. OCCUPANCY SENSOR LOCATIONS SHOWN ARE FOR DESIGN INTENT ONLY. LOCATE OCCUPANCY SENSORS PER MANUFACTURER'S WRITTEN INSTALLATION INSTRUCTIONS.
2. COORDINATE EXACT LOCATIONS AND MOUNTING HEIGHTS OF LIGHT FIXTURES WITH HVAC EQUIPMENT AND OTHER DEVICES/EQUIPMENT.
3. COORDINATE LIGHT SWITCHES WITH THERMOSTATS AND OTHER WALL MOUNTED DEVICES.
4. PROVIDE RELAY CONTACTOR FOR EXTERIOR LIGHTING. RELAY SHALL INTERLOCK WITH THE NEAREST EXISTING LIGHTING CIRCUIT SUCH THAT THE EXISTING LIGHTING CONTROL SHALL CONTROL THE NEW EXTERIOR LIGHTING.

NO WORK

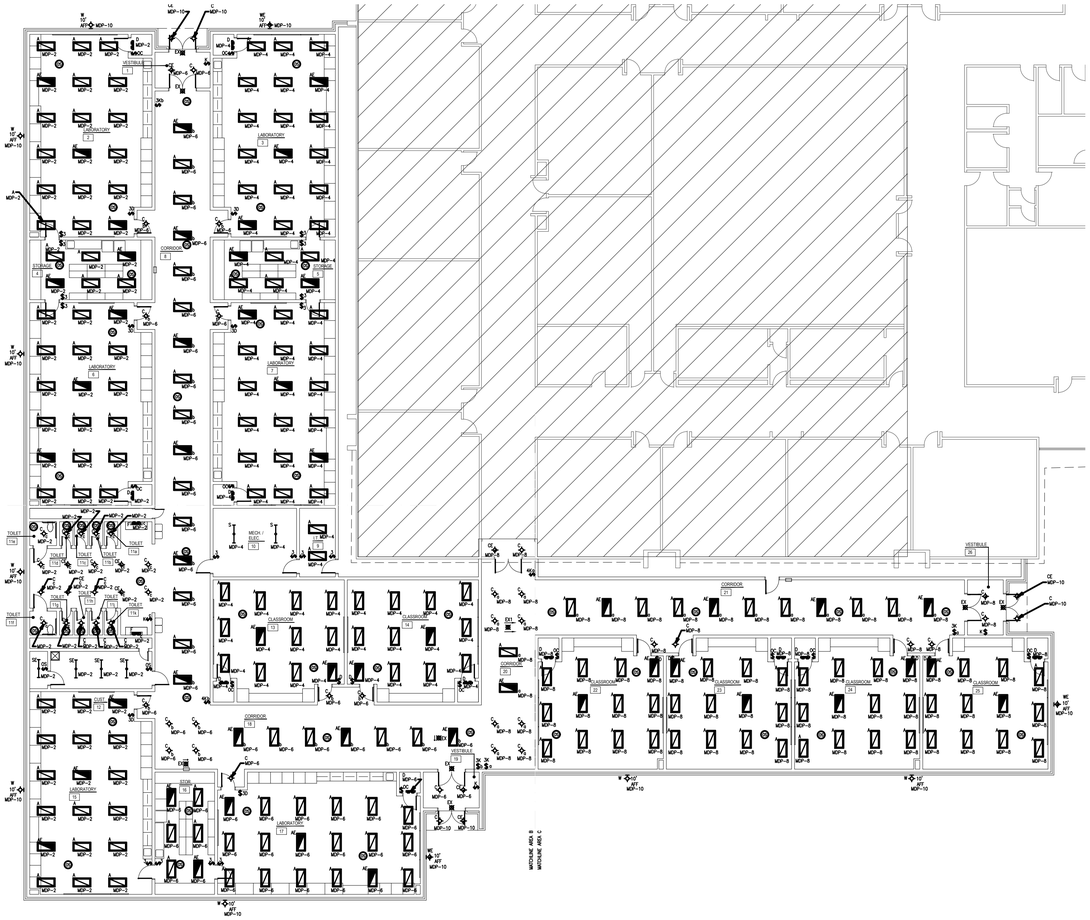

1 OVERALL LIGHTING PLAN- CLASSROOM AREA
SCALE: 1/16" = 1'-0"

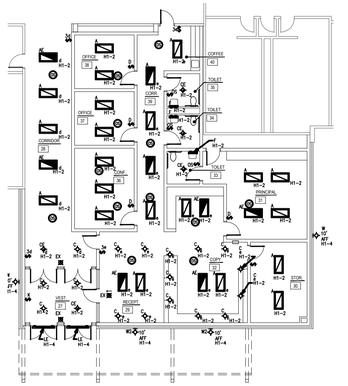

1 OVERALL LIGHTING PLAN OFFICE AREA
SCALE: 1/16" = 1'-0"

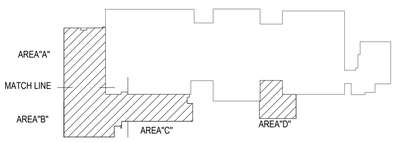

KEY PLAN

AGP
the Abla Griffin Partnership L.L.C.
201 N. BROADWAY
SUITE 210
MOORE, OK. 73160
405.735.3477
AGP@theAGP.net
www.theAGP.net

CEDAR CREEK
CIVIL

KFC ENGINEERING
STRUCTURAL

SALAS O'BRIEN
MECHANICAL / ELECTRICAL

LICENSED PROFESSIONAL ENGINEER
TIMOTHY VAN OSTRAN
22659
08/18/23
OKLAHOMA

GT
drawn by

TVO
checked by

JULY 2023
date

revisions

MOORE PUBLIC SCHOOLS
BOARD OF EDUCATION
MOORE, OKLAHOMA

M.O.O.R.E. Public Schools
LEARNING FOR LIFE

CLASSROOM ADDITION
HIGHLAND WEST
JUNIOR HIGH SCHOOL

sheet no:

E002

Salas O'Brien
2600 Van Buren St., Suite 2635
Norman, OK 73072
Salas O'Brien Registration: CA# 7058
Expiration Date : 6/30/2025
Salas O'Brien Project Number: 2023-02792-00

OWNERSHIP USE OF DOCUMENTS:

AGP EXPRESSLY RESERVES ITS COPYRIGHT AND OTHER PROPERTY RIGHTS OF ALL PLANS AND DRAWINGS DESIGNED AND/OR PRODUCED. PLANS AND DRAWINGS ARE NOT TO BE REPRODUCED IN ANY FORM OR MANNER WITHOUT THE EXPRESSED WRITTEN CONSENT OF AGP.

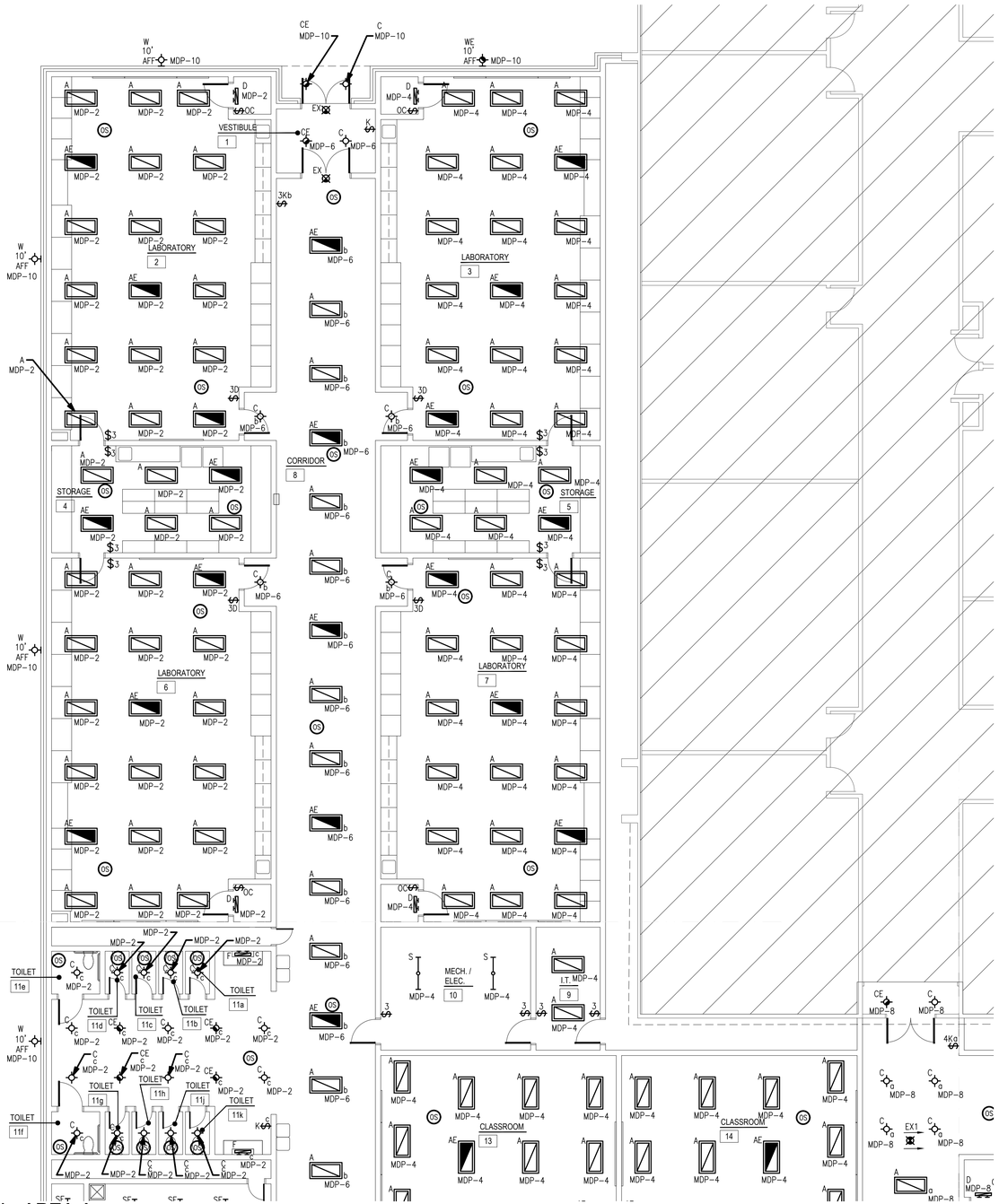

1 ELECTRICAL LIGHTING PLAN - AREA A

SCALE: 1/8" = 1'-0"

NORTH

LIGHTING GENERAL NOTES

1. OCCUPANCY SENSOR LOCATIONS SHOWN ARE FOR DESIGN INTENT ONLY. LOCATE OCCUPANCY SENSORS PER MANUFACTURER'S WRITTEN INSTALLATION INSTRUCTIONS.
2. COORDINATE EXACT LOCATIONS AND MOUNTING HEIGHTS OF LIGHT FIXTURES WITH HVAC EQUIPMENT AND OTHER DEVICES/EQUIPMENT.
3. COORDINATE LIGHT SWITCHES WITH THERMOSTATS AND OTHER WALL MOUNTED DEVICES.
4. PROVIDE RELAY CONTACTOR FOR EXTERIOR LIGHTING. RELAY SHALL INTERLOCK WITH THE NEAREST EXISTING LIGHTING CIRCUIT SUCH THAT THE EXISTING LIGHTING CONTROL SHALL CONTROL THE NEW EXTERIOR LIGHTING.

NO WORK

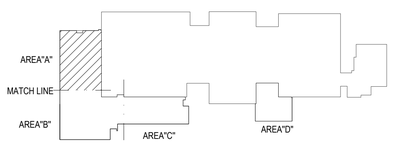

KEY PLAN

NORTH

AGP
the Abla Griffin Partnership L.L.C.
201 N. BROADWAY
SUITE 210
MOORE, OK. 73160
405.735.3477
AGP@theAGP.net
www.theAGP.net

CEDAR CREEK
CIVIL

KFC ENGINEERING
STRUCTURAL

SALAS O'BRIEN
MECHANICAL / ELECTRICAL

GT
drawn by

TVO
checked by

JULY 2023
date

revisions

MOORE PUBLIC SCHOOLS
BOARD OF EDUCATION
MOORE, OKLAHOMA

MOORE Public Schools
LEARNING FOR LIFE

CLASSROOM ADDITION
HIGHLAND WEST
JUNIOR HIGH SCHOOL

sheet no:

E101

Salas O'Brien
2600 Van Buren St., Suite 2635
Norman, OK 73072
Salas O'Brien Registration: CA# 7058
Expiration Date : 6/30/2025
Salas O'Brien Project Number: 2023-02792-00

OWNERSHIP USE OF DOCUMENTS:

AGP EXPRESSLY RESERVES ITS COPYRIGHT AND OTHER PROPERTY RIGHTS OF ALL PLANS AND DRAWINGS DESIGNED AND/OR PRODUCED. PLANS AND DRAWINGS ARE NOT TO BE REPRODUCED IN ANY FORM OR MANNER WITHOUT THE EXPRESSED WRITTEN CONSENT OF AGP.

MATCHLINE AREA A

MATCHLINE AREA B

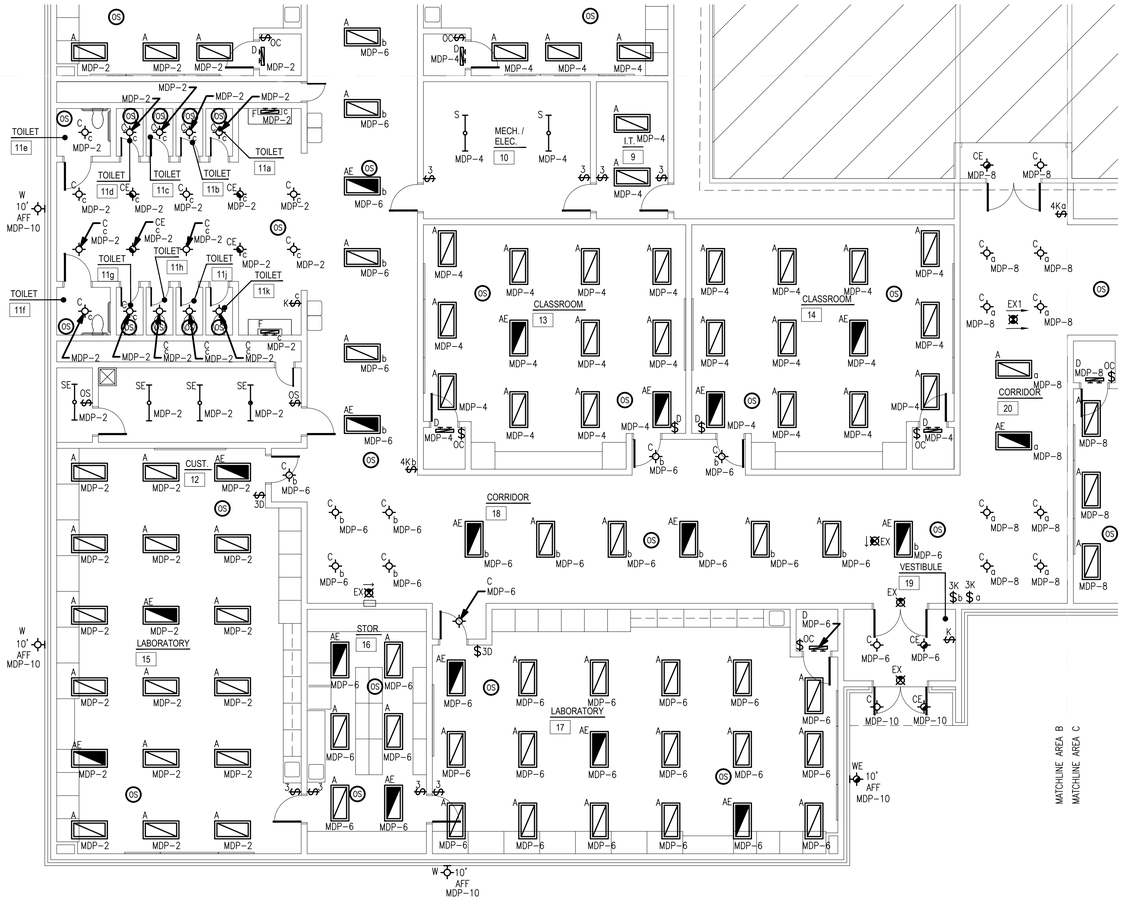

1 ELECTRICAL LIGHTING PLAN - AREA B

SCALE: 1/8" = 1'-0"

NORTH

LIGHTING GENERAL NOTES

1. OCCUPANCY SENSOR LOCATIONS SHOWN ARE FOR DESIGN INTENT ONLY. LOCATE OCCUPANCY SENSORS PER MANUFACTURER'S WRITTEN INSTALLATION INSTRUCTIONS.
2. COORDINATE EXACT LOCATIONS AND MOUNTING HEIGHTS OF LIGHT FIXTURES WITH HVAC EQUIPMENT AND OTHER DEVICES/EQUIPMENT.
3. COORDINATE LIGHT SWITCHES WITH THERMOSTATS AND OTHER WALL MOUNTED DEVICES.
4. PROVIDE RELAY CONTACTOR FOR EXTERIOR LIGHTING. RELAY SHALL INTERLOCK WITH THE NEAREST EXISTING LIGHTING CIRCUIT SUCH THAT THE EXISTING LIGHTING CONTROL SHALL CONTROL THE NEW EXTERIOR LIGHTING.

NO WORK

AGP
the Abla Griffin Partnership L.L.C.
201 N. BROADWAY
SUITE 210
MOORE, OK. 73160
405.735.3477
AGP@theAGP.net
www.theAGP.net

CEDAR CREEK
CIVIL

KFC ENGINEERING
STRUCTURAL

SALAS O'BRIEN
MECHANICAL / ELECTRICAL

GT
drawn by

TVO
checked by

JULY 2023
date

revisions

MOORE PUBLIC SCHOOLS
BOARD OF EDUCATION
MOORE, OKLAHOMA

MOORE Public Schools
LEARNING FOR LIFE

CLASSROOM ADDITION
HIGHLAND WEST
JUNIOR HIGH SCHOOL

sheet no:

E102

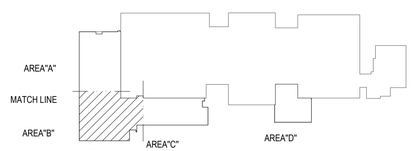

KEY PLAN

NORTH

Salas O'Brien
2600 Van Buren St., Suite 2635
Norman, OK 73072
Salas O'Brien Registration: CA# 7058
Expiration Date : 6/30/2025
Salas O'Brien Project Number: 2023-02792-00

OWNERSHIP USE OF DOCUMENTS:

AGP EXPRESSLY RESERVES ITS COPYRIGHT AND OTHER PROPERTY RIGHTS OF ALL PLANS AND DRAWINGS DESIGNED AND/OR PRODUCED. PLANS AND DRAWINGS ARE NOT TO BE REPRODUCED IN ANY FORM OR MANNER WITHOUT THE EXPRESSED WRITTEN CONSENT OF AGP.

LIGHTING GENERAL NOTES

1. OCCUPANCY SENSOR LOCATIONS SHOWN ARE FOR DESIGN INTENT ONLY. LOCATE OCCUPANCY SENSORS PER MANUFACTURER'S WRITTEN INSTALLATION INSTRUCTIONS.
2. COORDINATE EXACT LOCATIONS AND MOUNTING HEIGHTS OF LIGHT FIXTURES WITH HVAC EQUIPMENT AND OTHER DEVICES/EQUIPMENT.
3. COORDINATE LIGHT SWITCHES WITH THERMOSTATS AND OTHER WALL MOUNTED DEVICES.
4. PROVIDE RELAY CONTACTOR FOR EXTERIOR LIGHTING. RELAY SHALL INTERLOCK WITH THE NEAREST EXISTING LIGHTING CIRCUIT SUCH THAT THE EXISTING LIGHTING CONTROL SHALL CONTROL THE NEW EXTERIOR LIGHTING.

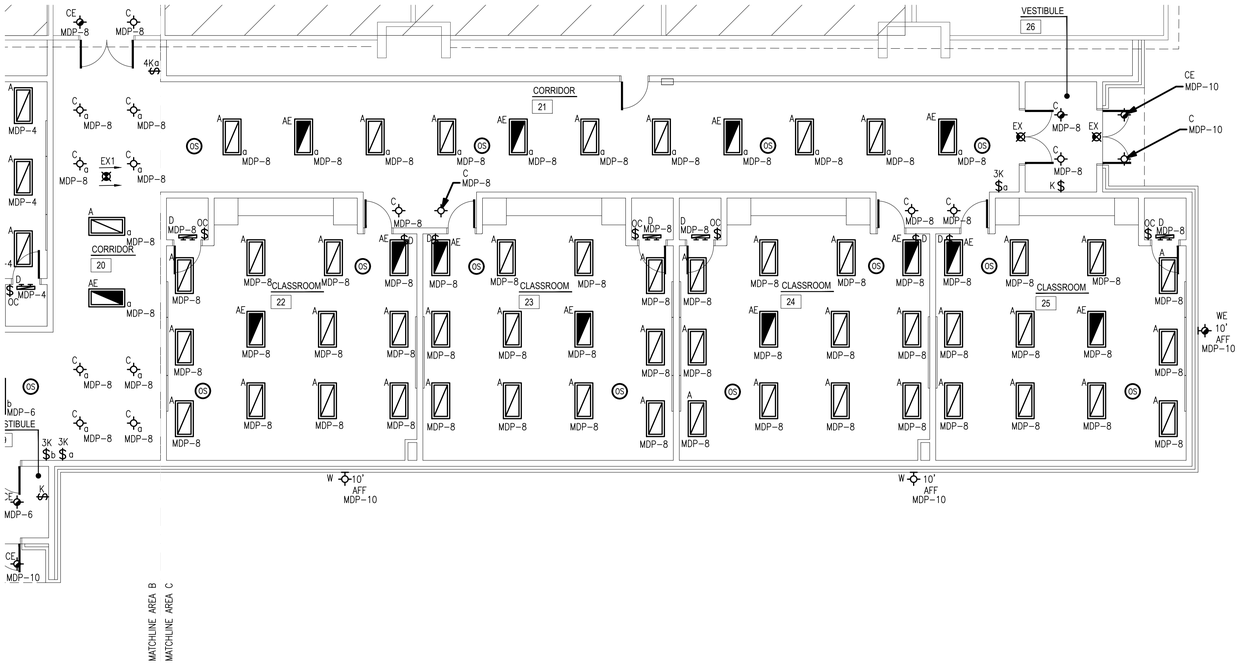

1 ELECTRICAL LIGHTING PLAN - AREA C

SCALE: 1/8" = 1'-0"

NORTH

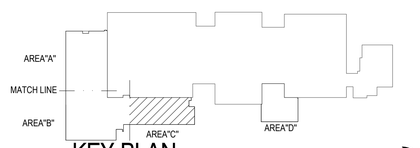

KEY PLAN

NORTH

AGP
the Abla Griffin Partnership L.L.C.
201 N. BROADWAY
SUITE 210
MOORE, OK. 73160
405.735.3477
AGP@theAGP.net
www.theAGP.net

CEDAR CREEK
CIVIL

KFC ENGINEERING
STRUCTURAL

SALAS O'BRIEN
MECHANICAL / ELECTRICAL

GT
drawn by

TVO
checked by

JULY 2023
date

revisions

MOORE PUBLIC SCHOOLS
BOARD OF EDUCATION
MOORE, OKLAHOMA

MOORE Public Schools
LEARNING FOR LIFE

CLASSROOM ADDITION
HIGHLAND WEST
JUNIOR HIGH SCHOOL

sheet no:

E103

Salas O'Brien
2600 Van Buren St., Suite 2635
Norman, OK 73072
Salas O'Brien Registration: CA# 7058
Expiration Date : 6/30/2025
Salas O'Brien Project Number: 2023-02792-00

OWNERSHIP USE OF DOCUMENTS:

AGP EXPRESSLY RESERVES ITS COPYRIGHT AND OTHER PROPERTY RIGHTS OF ALL PLANS AND DRAWINGS DESIGNED AND/OR PRODUCED. PLANS AND DRAWINGS ARE NOT TO BE REPRODUCED IN ANY FORM OR MANNER WITHOUT THE EXPRESSED WRITTEN CONSENT OF AGP.

LIGHTING GENERAL NOTES

1. OCCUPANCY SENSOR LOCATIONS SHOWN ARE FOR DESIGN INTENT ONLY. LOCATE OCCUPANCY SENSORS PER MANUFACTURER'S WRITTEN INSTALLATION INSTRUCTIONS.
2. COORDINATE EXACT LOCATIONS AND MOUNTING HEIGHTS OF LIGHT FIXTURES WITH HVAC EQUIPMENT AND OTHER DEVICES/EQUIPMENT.
3. COORDINATE LIGHT SWITCHES WITH THERMOSTATS AND OTHER WALL MOUNTED DEVICES.
4. PROVIDE RELAY CONTACTOR FOR EXTERIOR LIGHTING. RELAY SHALL INTERLOCK WITH THE NEAREST EXISTING LIGHTING CIRCUIT SUCH THAT THE EXISTING LIGHTING CONTROL SHALL CONTROL THE NEW EXTERIOR LIGHTING.

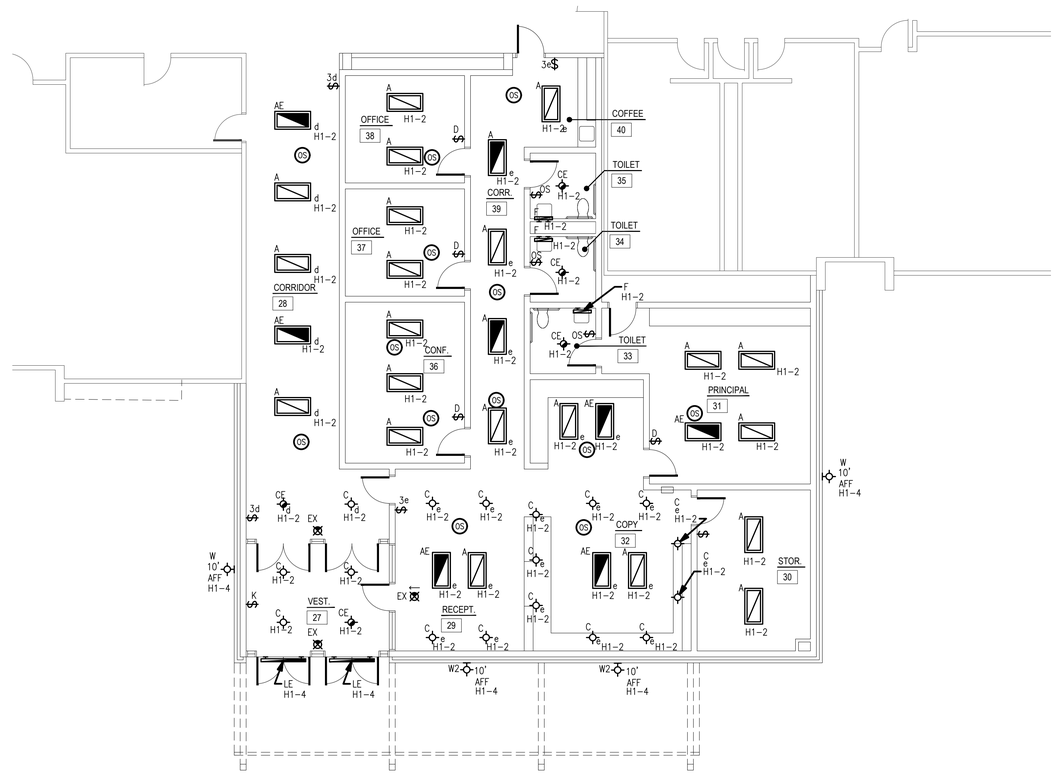

1 ELECTRICAL LIGHTING PLAN - AREA D

SCALE: 1/8" = 1'-0"

NORTH

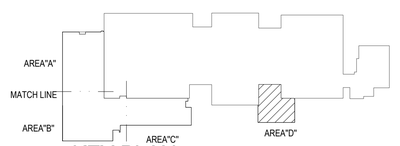

KEY PLAN

NORTH

Salas O'Brien
2600 Van Buren St., Suite 2635
Norman, OK 73072
Salas O'Brien Registration: CA# 7058
Expiration Date : 6/30/2025
Salas O'Brien Project Number: 2023-02792-00

AGP
the Abla Griffin Partnership L.L.C.
201 N. BROADWAY
SUITE 210
MOORE, OK. 73160
405.735.3477
AGP@theAGP.net
www.theAGP.net

CEDAR CREEK
CIVIL

KFC ENGINEERING
STRUCTURAL

SALAS O'BRIEN
MECHANICAL / ELECTRICAL

LICENSED PROFESSIONAL ENGINEER
TIMOTHY VAN OSTRAN
22659
08/18/23
OKLAHOMA

GT
drawn by

TVO
checked by

JULY 2023
date

revisions

MOORE PUBLIC SCHOOLS
BOARD OF EDUCATION
MOORE, OKLAHOMA

MOORE Public Schools
LEARNING FOR LIFE

CLASSROOM ADDITION
HIGHLAND WEST
JUNIOR HIGH SCHOOL

sheet no:

E104

OWNERSHIP USE OF DOCUMENTS:

AGP EXPRESSLY RESERVES ITS COPYRIGHT AND OTHER PROPERTY RIGHTS OF ALL PLANS AND DRAWINGS DESIGNED AND/OR PRODUCED. PLANS AND DRAWINGS ARE NOT TO BE REPRODUCED IN ANY FORM OR MANNER WITHOUT THE EXPRESSED WRITTEN CONSENT OF AGP.

POWER GENERAL NOTES

1. COORDINATE EXACT LOCATIONS OF DEVICES SHOWN WITH OTHER EQUIPMENT. COORDINATE EXACT LOCATION OF CEILING MOUNTED DEVICES WITH LIGHTS, HVAC EQUIPMENT, AND OTHER DEVICES.
2. COORDINATE WITH MECHANICAL CONTRACTOR AND PROVIDE ALL RELAYS, CONNECTIONS, AND ALL DEVICES NECESSARY TO INTERLOCK EXHAUST FANS, DAMPERS, ETC WITH PROPER CONTROL DEVICES.
3. COORDINATE EXACT LOCATION OF MECHANICAL EQUIPMENT WITH MECHANICAL CONTRACTOR.

NO WORK

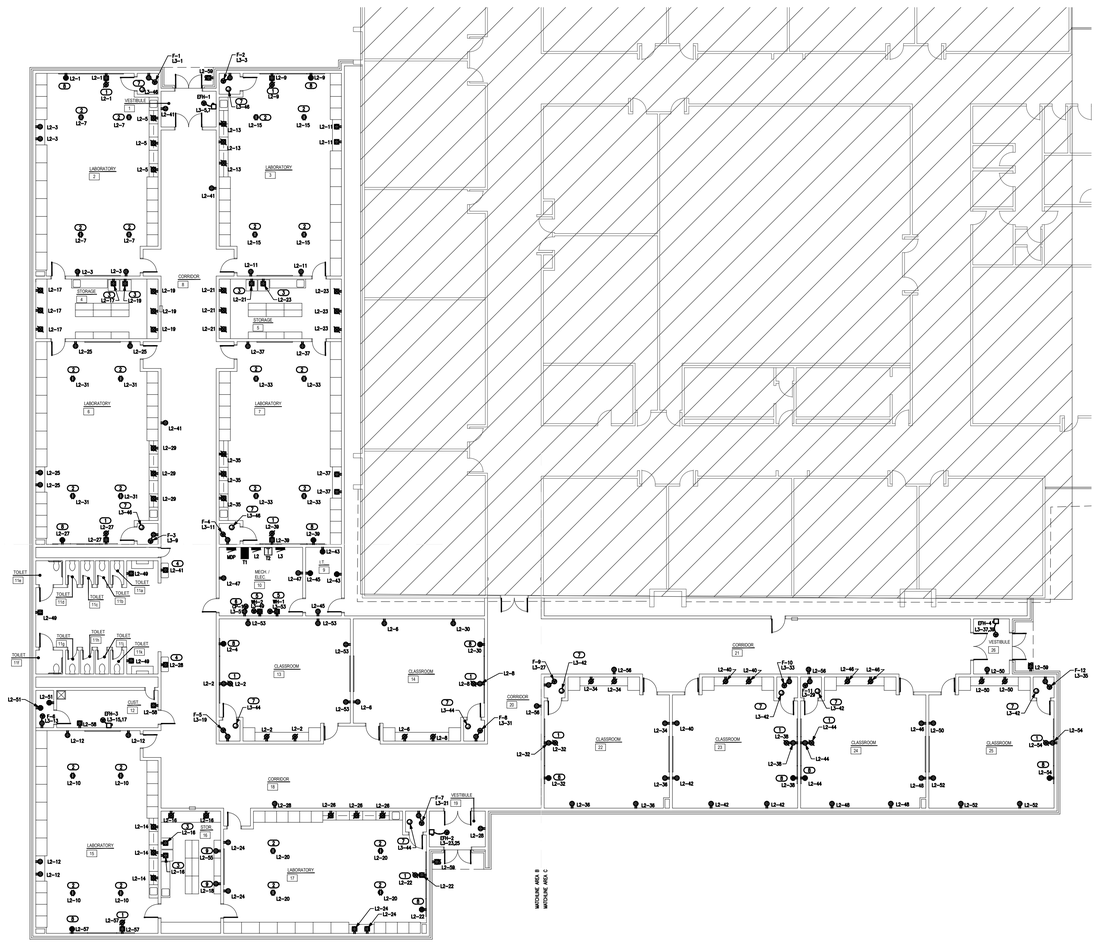

1 OVERALL POWER PLAN - CLASSROOM AREA
SCALE: 1/16" = 1'-0"

NORTH

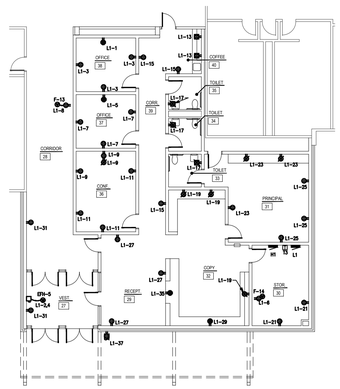

1 OVERALL POWER PLAN - OFFICE AREA
SCALE: 1/16" = 1'-0"

NORTH

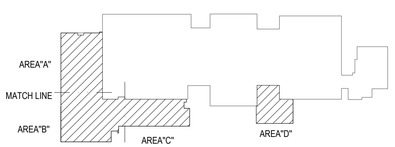

KEY PLAN

NORTH

Salas O'Brien
2600 Van Buren St., Suite 2635
Norman, OK 73072
Salas O'Brien Registration: CA# 7058
Expiration Date : 6/30/2025
Salas O'Brien Project Number: 2023-02792-00

AGP
the Abla Griffin Partnership L.L.C.
201 N. BROADWAY
SUITE 210
MOORE, OK. 73160
405.735.3477
AGP@theAGP.net
www.theAGP.net

CEDAR CREEK
CIVIL

KFC ENGINEERING
STRUCTURAL

SALAS O'BRIEN
MECHANICAL / ELECTRICAL

GT
drawn by

TVO
checked by

JULY 2023
date

revisions

MOORE PUBLIC SCHOOLS
BOARD OF EDUCATION
MOORE, OKLAHOMA

MOORE Public Schools
LEARNING FOR LIFE

CLASSROOM ADDITION
HIGHLAND WEST
JUNIOR HIGH SCHOOL

sheet no:

E200

OWNERSHIP USE OF DOCUMENTS:

AGP EXPRESSLY RESERVES ITS COPYRIGHT AND OTHER PROPERTY RIGHTS OF ALL PLANS AND DRAWINGS DESIGNED AND/OR PRODUCED. PLANS AND DRAWINGS ARE NOT TO BE REPRODUCED IN ANY FORM OR MANNER WITHOUT THE EXPRESSED WRITTEN CONSENT OF AGP.

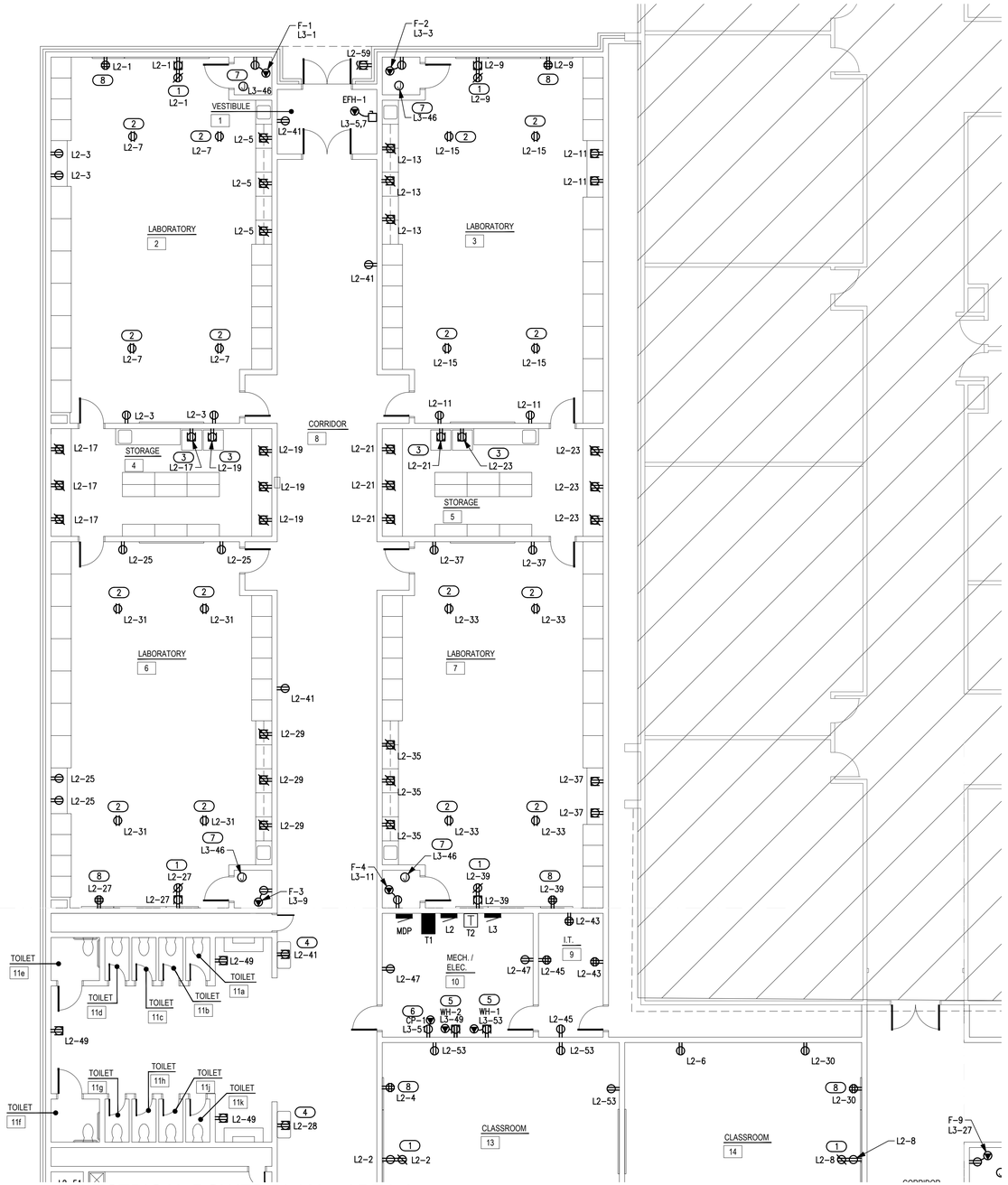

1 ELECTRICAL POWER PLAN - AREA A

SCALE: 1/8" = 1'-0"

POWER GENERAL NOTES

1. COORDINATE EXACT LOCATIONS OF DEVICES SHOWN WITH OTHER EQUIPMENT. COORDINATE EXACT LOCATION OF CEILING MOUNTED DEVICES WITH LIGHTS, HVAC EQUIPMENT, AND OTHER DEVICES.
2. COORDINATE WITH MECHANICAL CONTRACTOR AND PROVIDE ALL RELAYS, CONNECTIONS, AND ALL DEVICES NECESSARY TO INTERLOCK EXHAUST FANS, DAMPERS, ETC WITH PROPER CONTROL DEVICES.
3. COORDINATE EXACT LOCATION OF MECHANICAL EQUIPMENT WITH MECHANICAL CONTRACTOR.

KEYED NOTES

1. RECEPTACLE FOR SMART BOARD (BY OWNER) IN A RECESSED BACK BOX. REFER TO DETAIL 'E501/5' FOR ADDITIONAL INFORMATION.
2. PROVIDE 120V DROP CORD RECEPTACLE FOR GENERAL USE. COORDINATE FINAL LOCATIONS AND REQUIREMENTS WITH OWNER/ARCHITECT PRIOR TO ROUGH-IN. REFER TO DETAIL 'E501/9' FOR ADDITIONAL INFORMATION.
3. PROVIDE 120V RECEPTACLES FOR FRIDGE & FREEZER. COORDINATE FINAL LOCATIONS AND REQUIREMENTS WITH ARCHITECT/OWNER PRIOR TO ROUGH-IN. ADJUST CONNECTION AS REQUIRED FOR A COMPLETE INSTALLATION.
4. PROVIDE 120V RECEPTACLE FOR WATER COOLER. COORDINATE EXACT LOCATIONS AND REQUIREMENTS WITH OWNER/ARCHITECT PRIOR TO ROUGH IN.
5. PROVIDE 120V RECEPTACLE FOR WATER HEATER. COORDINATE EXACT LOCATIONS AND REQUIREMENTS WITH PLUMBING CONTRACTOR PRIOR TO ROUGH-IN.
6. PROVIDE 120V CONNECTION FOR CIRCULATION PUMP. CP-1 SHALL SERVE BOTH WH-1 & WH-2. COORDINATE EXACT LOCATION AND REQUIREMENTS WITH PLUMBING CONTRACTOR PRIOR TO ROUGH-IN.
7. PROVIDE 120V CONNECTION FOR TRAP PRIMER LOCATED ON WALL 4'-0" AFF. COORDINATE EXACT LOCATION AND REQUIREMENTS WITH PLUMBING CONTRACTOR PRIOR TO ROUGH-IN.
8. APPROXIMATE LOCATION OF TEACHERS DESK. COORDINATE FINAL LOCATION AND REQUIREMENTS WITH OWNER/ARCHITECT PRIOR TO ROUGH-IN. REFER TO DETAIL 'E501/5' FOR ADDITIONAL INFORMATION.
9. PROVIDE DEDICATED CIRCUIT CONNECTION FOR 3D PRINTER. COORDINATE EXACT LOCATION AND REQUIREMENTS WITH OWNER/ARCHITECT PRIOR TO ROUGH-IN.

NO WORK

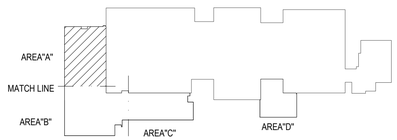

KEY PLAN

NORTH

AGP
the Abla Griffin Partnership L.L.C.
201 N. BROADWAY
SUITE 210
MOORE, OK. 73160
405.735.3477
AGP@theAGP.net
www.theAGP.net

CEDAR CREEK
CIVIL

KFC ENGINEERING
STRUCTURAL

SALAS O'BRIEN
MECHANICAL / ELECTRICAL

GT
drawn by

TVO
checked by

JULY 2023
date

revisions

MOORE PUBLIC SCHOOLS
BOARD OF EDUCATION
MOORE, OKLAHOMA

MOORE Public Schools
LEARNING FOR LIFE

CLASSROOM ADDITION
HIGHLAND WEST
JUNIOR HIGH SCHOOL

sheet no:

E201

Salas O'Brien
2600 Van Buren St., Suite 2635
Norman, OK 73072
Salas O'Brien Registration: CA# 7058
Expiration Date : 6/30/2025
Salas O'Brien Project Number: 2023-02792-00

OWNERSHIP USE OF DOCUMENTS:

AGP EXPRESSLY RESERVES ITS COPYRIGHT AND OTHER PROPERTY RIGHTS OF ALL PLANS AND DRAWINGS DESIGNED AND/OR PRODUCED. PLANS AND DRAWINGS ARE NOT TO BE REPRODUCED IN ANY FORM OR MANNER WITHOUT THE EXPRESSED WRITTEN CONSENT OF AGP.

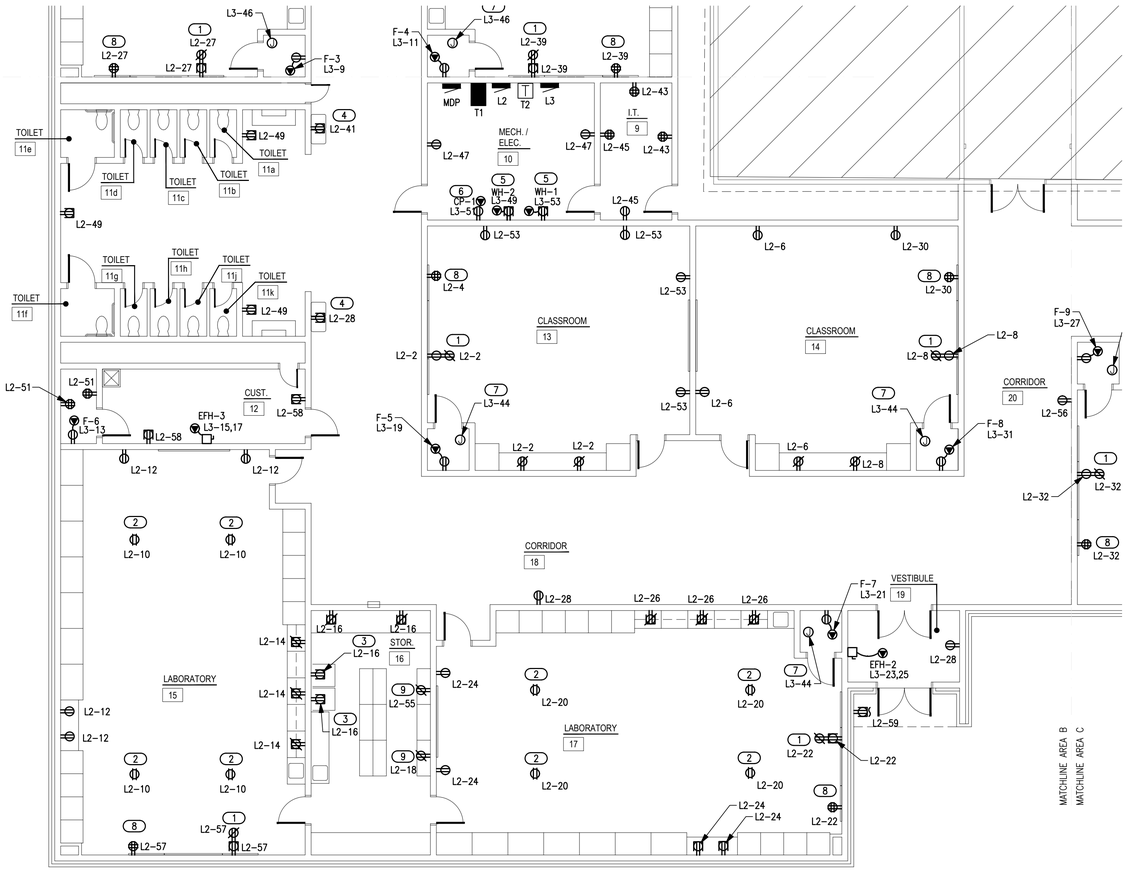

1 ELECTRICAL POWER PLAN - AREA B

SCALE: 1/8" = 1'-0"

NORTH

ROOF GENERAL NOTES

1. COORDINATE EXACT LOCATIONS OF DEVICES SHOWN WITH OTHER EQUIPMENT.
2. COORDINATE WITH MECHANICAL CONTRACTOR AND PROVIDE ALL RELAYS, CONNECTIONS, AND ALL DEVICES NECESSARY TO INTERLOCK EXHAUST FANS, DAMPERS, ETC WITH PROPER DEVICES.
3. COORDINATE EXACT LOCATIONS OF MECHANICAL EQUIPMENT WITH MECHANICAL CONTRACTOR.
4. FIRMLY MOUNT WEATHERPROOF 120V CONVENIENCE OUTLET ON

KEYED NOTES

1. RECEPTACLE FOR SMART BOARD (BY OWNER) IN A RECESSED BACK BOX. REFER TO DETAIL 'E501/5' FOR ADDITIONAL INFORMATION.
2. PROVIDE 120V DROP CORD RECEPTACLE FOR GENERAL USE. COORDINATE FINAL LOCATIONS AND REQUIREMENTS WITH OWNER/ARCHITECT PRIOR TO ROUGH-IN. REFER TO DETAIL 'E501/9' FOR ADDITIONAL INFORMATION.
3. PROVIDE 120V RECEPTACLES FOR FRIDGE & FREEZER. COORDINATE FINAL LOCATIONS AND REQUIREMENTS WITH ARCHITECT/OWNER PRIOR TO ROUGH-IN. ADJUST CONNECTION AS REQUIRED FOR A COMPLETE INSTALLATION.
4. PROVIDE 120V RECEPTACLE FOR WATER COOLER. COORDINATE EXACT LOCATIONS AND REQUIREMENTS WITH OWNER/ARCHITECT PRIOR TO ROUGH IN.
5. PROVIDE 120V RECEPTACLE FOR WATER HEATER. COORDINATE EXACT LOCATIONS AND REQUIREMENTS WITH PLUMBING CONTRACTOR PRIOR TO ROUGH-IN.
6. PROVIDE 120V CONNECTION FOR CIRCULATION PUMP. CP-1 SHALL SERVE BOTH WH-1 & WH-2. COORDINATE EXACT LOCATION AND REQUIREMENTS WITH PLUMBING CONTRACTOR PRIOR TO ROUGH-IN.
7. PROVIDE 120V CONNECTION FOR TRAP PRIMER LOCATED ON WALL 4'-0" AFF. COORDINATE EXACT LOCATION AND REQUIREMENTS WITH PLUMBING CONTRACTOR PRIOR TO ROUGH-IN.
8. APPROXIMATE LOCATION OF TEACHERS DESK. COORDINATE FINAL LOCATION AND REQUIREMENTS WITH OWNER/ARCHITECT PRIOR TO ROUGH-IN. REFER TO DETAIL 'E501/5' FOR ADDITIONAL INFORMATION.
9. PROVIDE DEDICATED CIRCUIT CONNECTION FOR 3D PRINTER. COORDINATE EXACT LOCATION AND REQUIREMENTS WITH OWNER/ARCHITECT PRIOR TO ROUGH-IN.

NO WORK

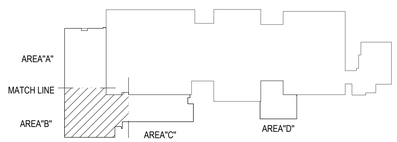

KEY PLAN

NORTH

Salas O'Brien
2600 Van Buren St., Suite 2635
Norman, OK 73072
Salas O'Brien Registration: CA# 7058
Expiration Date : 6/30/2025
Salas O'Brien Project Number: 2023-02792-00

AGP
the Abla Griffin Partnership L.L.C.
201 N. BROADWAY
SUITE 210
MOORE, OK. 73160
405.735.3477
AGP@theAGP.net
www.theAGP.net

CEDAR CREEK
CIVIL

KFC ENGINEERING
STRUCTURAL

SALAS O'BRIEN
MECHANICAL / ELECTRICAL

GT
drawn by

TVO
checked by

JULY 2023
date

revisions

MOORE PUBLIC SCHOOLS
BOARD OF EDUCATION
MOORE, OKLAHOMA

MOORE Public Schools
LEARNING FOR LIFE

CLASSROOM ADDITION
HIGHLAND WEST
JUNIOR HIGH SCHOOL

sheet no:

E202

OWNERSHIP USE OF DOCUMENTS:

AGP EXPRESSLY RESERVES ITS COPYRIGHT AND OTHER PROPERTY RIGHTS OF ALL PLANS AND DRAWINGS DESIGNED AND/OR PRODUCED. PLANS AND DRAWINGS ARE NOT TO BE REPRODUCED IN ANY FORM OR MANNER WITHOUT THE EXPRESSED WRITTEN CONSENT OF AGP.

POWER GENERAL NOTES

1. COORDINATE EXACT LOCATIONS OF DEVICES SHOWN WITH OTHER EQUIPMENT. COORDINATE EXACT LOCATION OF CEILING MOUNTED DEVICES WITH LIGHTS, HVAC EQUIPMENT, AND OTHER DEVICES.
2. COORDINATE WITH MECHANICAL CONTRACTOR AND PROVIDE ALL RELAYS, CONNECTIONS, AND ALL DEVICES NECESSARY TO INTERLOCK EXHAUST FANS, DAMPERS, ETC WITH PROPER CONTROL DEVICES.
3. COORDINATE EXACT LOCATION OF MECHANICAL EQUIPMENT WITH MECHANICAL CONTRACTOR.

KEYED NOTES

(1) RECEPTACLE FOR SMART BOARD (BY OWNER) IN A RECESSED BACK BOX. REFER TO DETAIL 'E501/7' FOR ADDITIONAL INFORMATION.

(7) PROVIDE 120V CONNECTION FOR TRAP PRIMER LOCATED ON WALL 5'-0" AFF. COORDINATE EXACT LOCATION AND REQUIREMENTS WITH PLUMBING CONTRACTOR PRIOR TO ROUGH-IN.

(8) APPROXIMATE LOCATION OF TEACHERS DESK. COORDINATE FINAL LOCATION AND REQUIREMENTS WITH OWNER/ARCHITECT PRIOR TO ROUGH-IN. REFER TO DETAIL 'E501/7' FOR ADDITIONAL INFORMATION.

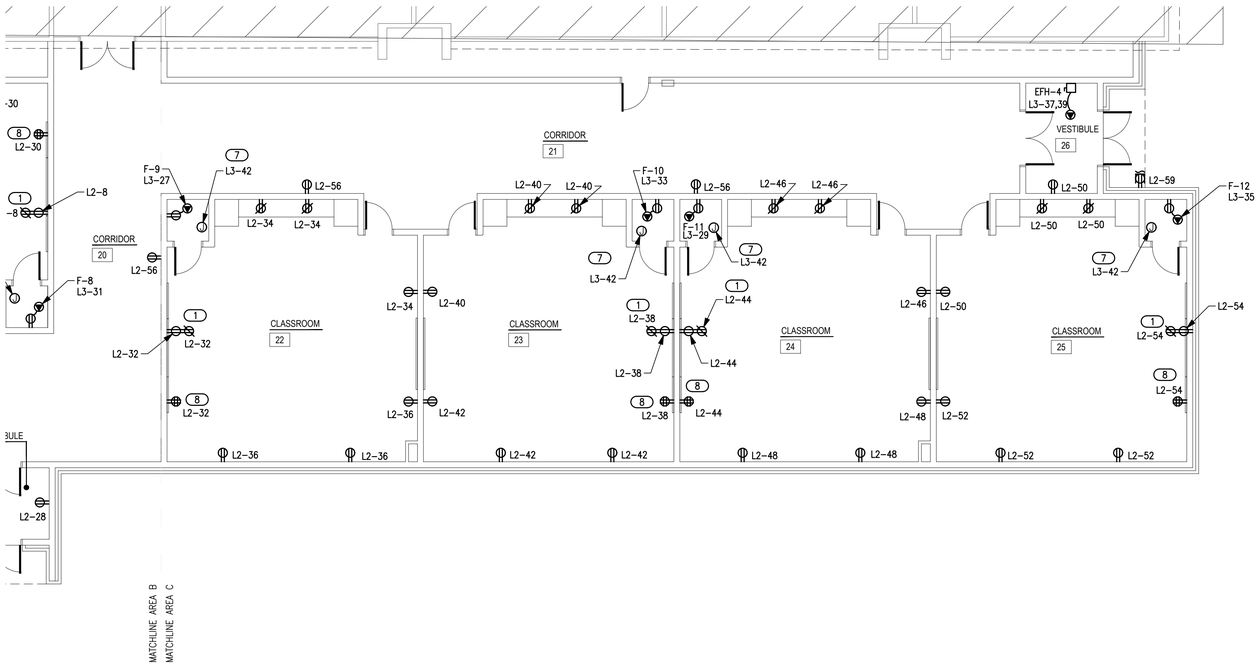

1 ELECTRICAL POWER PLAN - AREA C

SCALE: 1/8" = 1'-0"

NORTH

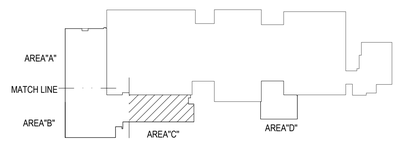

KEY PLAN

NORTH

Salas O'Brien
2600 Van Buren St., Suite 2635
Norman, OK 73072
Salas O'Brien Registration: CA# 7058
Expiration Date : 6/30/2025

Salas O'Brien Project Number: 2023-02792-00

AGP
the Abla Griffin Partnership L.L.C.
201 N. BROADWAY
SUITE 210
MOORE, OK. 73160
405.735.3477
AGP@theAGP.net
www.theAGP.net

CEDAR CREEK
CIVIL

KFC ENGINEERING
STRUCTURAL

SALAS O'BRIEN
MECHANICAL / ELECTRICAL

REGISTERED PROFESSIONAL ENGINEER
TIMOTHY VAN OSTRAN
22659
08/18/23
OKLAHOMA

GT
drawn by

TVO
checked by

JULY 2023
date

revisions

MOORE PUBLIC SCHOOLS
BOARD OF EDUCATION
MOORE, OKLAHOMA

MOORE Public Schools
LEARNING FOR LIFE

CLASSROOM ADDITION
HIGHLAND WEST
JUNIOR HIGH SCHOOL

sheet no:

E203

OWNERSHIP USE OF DOCUMENTS:

AGP EXPRESSLY RESERVES ITS COPYRIGHT AND OTHER PROPERTY RIGHTS OF ALL PLANS AND DRAWINGS DESIGNED AND/OR PRODUCED. PLANS AND DRAWINGS ARE NOT TO BE REPRODUCED IN ANY FORM OR MANNER WITHOUT THE EXPRESSED WRITTEN CONSENT OF AGP.

POWER GENERAL NOTES

1. COORDINATE EXACT LOCATIONS OF DEVICES SHOWN WITH OTHER EQUIPMENT. COORDINATE EXACT LOCATION OF CEILING MOUNTED DEVICES WITH LIGHTS, HVAC EQUIPMENT, AND OTHER DEVICES.
2. COORDINATE WITH MECHANICAL CONTRACTOR AND PROVIDE ALL RELAYS, CONNECTIONS, AND ALL DEVICES NECESSARY TO INTERLOCK EXHAUST FANS, DAMPERS, ETC WITH PROPER CONTROL DEVICES.
3. COORDINATE EXACT LOCATION OF MECHANICAL EQUIPMENT WITH MECHANICAL CONTRACTOR.

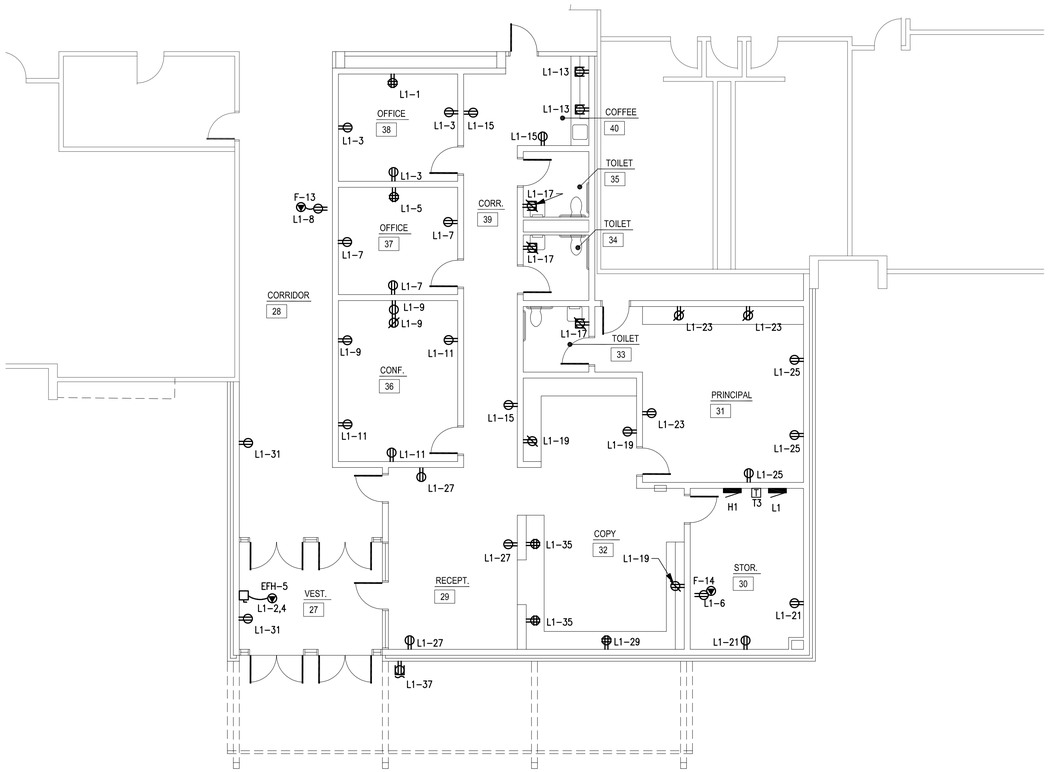

1 ELECTRICAL POWER PLAN - AREA D

SCALE: 1/8" = 1'-0"

NORTH

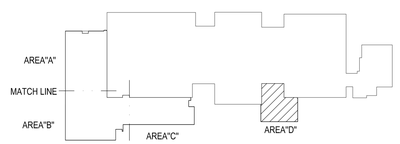

KEY PLAN

NORTH

AGP
the Abla Griffin Partnership L.L.C.
201 N. BROADWAY
SUITE 210
MOORE, OK. 73160
405.735.3477
AGP@theAGP.net
www.theAGP.net

CEDAR CREEK
CIVIL

KFC ENGINEERING
STRUCTURAL

SALAS O'BRIEN
MECHANICAL / ELECTRICAL

REGISTERED PROFESSIONAL ENGINEER
TIMOTHY VAN OSTRAN
21650
10/03/23
OKLAHOMA

GT
drawn by

TVO
checked by

JULY 2023
date

revisions

MOORE PUBLIC SCHOOLS
BOARD OF EDUCATION
MOORE, OKLAHOMA

MOORE Public Schools
LEARNING FOR LIFE

CLASSROOM ADDITION
HIGHLAND WEST
JUNIOR HIGH SCHOOL

sheet no:

E204

Salas O'Brien
2600 Van Buren St., Suite 2635
Norman, OK 73072
Salas O'Brien Registration: CA# 7058
Expiration Date : 6/30/2025
Salas O'Brien Project Number: 2023-02792-00

OWNERSHIP USE OF DOCUMENTS:

AGP EXPRESSLY RESERVES ITS COPYRIGHT AND OTHER PROPERTY RIGHTS OF ALL PLANS AND DRAWINGS DESIGNED AND/OR PRODUCED. PLANS AND DRAWINGS ARE NOT TO BE REPRODUCED IN ANY FORM OR MANNER WITHOUT THE EXPRESSED WRITTEN CONSENT OF AGP.

ROOF GENERAL NOTES

1. COORDINATE EXACT LOCATIONS OF DEVICES SHOWN WITH OTHER EQUIPMENT.
2. COORDINATE WITH MECHANICAL CONTRACTOR AND PROVIDE ALL RELAYS, CONNECTIONS, AND ALL DEVICES NECESSARY TO INTERLOCK EXHAUST FANS, DAMPERS, ETC WITH PROPER DEVICES.
3. COORDINATE EXACT LOCATIONS OF MECHANICAL EQUIPMENT WITH MECHANICAL CONTRACTOR.
4. FIRMLY MOUNT WEATHERPROOF 120V CONVENIENCE OUTLET ON UNISTRUT/KINDORF. COORDINATE WITH OTHER TRADES PRIOR TO ROUGH-IN.

NO WORK

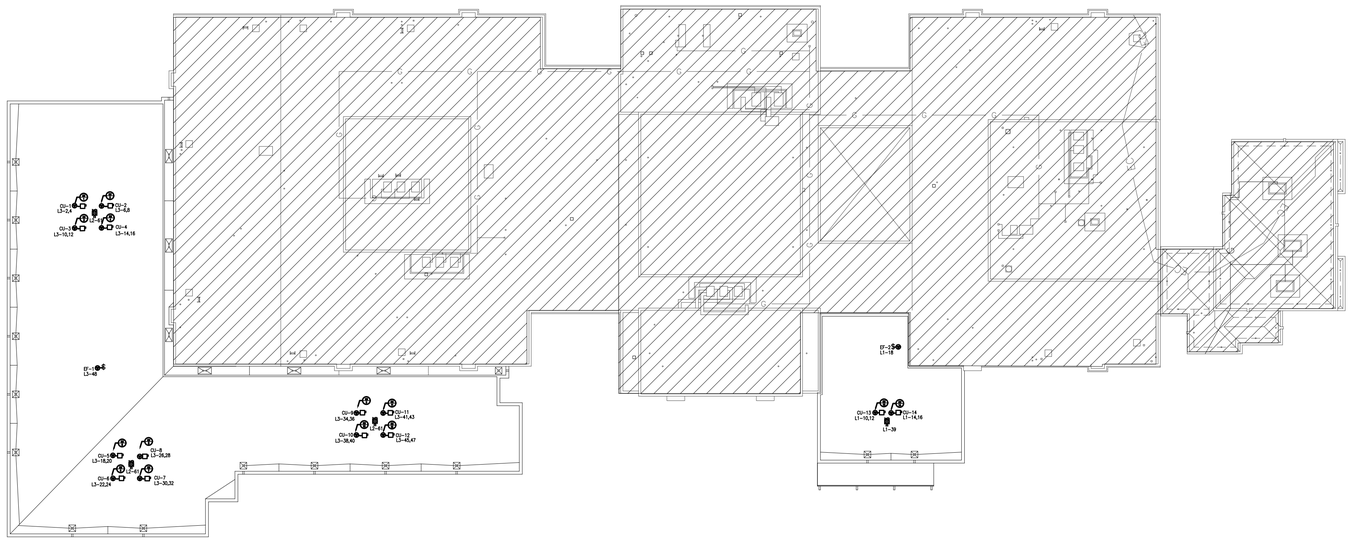

1 ELECTRICAL POWER PLAN - SITE ROOF

SCALE: 1/32" = 1'-0"

NORTH

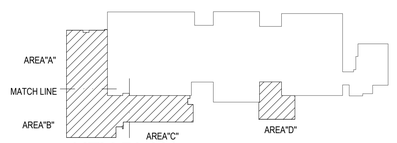

KEY PLAN

NORTH

Salas O'Brien

2600 Van Buren St., Suite 2635
Norman, OK 73072
Salas O'Brien Registration: CA# 7058
Expiration Date : 6/30/2025

Salas O'Brien Project Number: 2023-02792-00

AGP

the Abla Griffin Partnership L.L.C.

201 N. BROADWAY
SUITE 210
MOORE, OK. 73160
405.735.3477
AGP@theAGP.net
www.theAGP.net

CEDAR CREEK
CIVIL

KFC ENGINEERING
STRUCTURAL

SALAS O'BRIEN
MECHANICAL / ELECTRICAL

LICENSED PROFESSIONAL ENGINEER
TIMOTHY VAN OSTRAN
22659
08/18/23
OKLAHOMA

GT
drawn by

TVO
checked by

JULY 2023
date

revisions

MOORE PUBLIC SCHOOLS
BOARD OF EDUCATION
MOORE, OKLAHOMA

MOORE Public Schools
LEARNING FOR LIFE

CLASSROOM ADDITION
HIGHLAND WEST
JUNIOR HIGH SCHOOL

sheet no:

E210

OWNERSHIP USE OF DOCUMENTS:

AGP EXPRESSLY RESERVES ITS COPYRIGHT AND OTHER PROPERTY RIGHTS OF ALL PLANS AND DRAWINGS DESIGNED AND/OR PRODUCED. PLANS AND DRAWINGS ARE NOT TO BE REPRODUCED IN ANY FORM OR MANNER WITHOUT THE EXPRESSED WRITTEN CONSENT OF AGP.

ROOF GENERAL NOTES

1. COORDINATE EXACT LOCATIONS OF DEVICES SHOWN WITH OTHER EQUIPMENT.
2. COORDINATE WITH MECHANICAL CONTRACTOR AND PROVIDE ALL RELAYS, CONNECTIONS, AND ALL DEVICES NECESSARY TO INTERLOCK EXHAUST FANS, DAMPERS, ETC WITH PROPER DEVICES.
3. COORDINATE EXACT LOCATIONS OF MECHANICAL EQUIPMENT WITH MECHANICAL CONTRACTOR.
4. FIRMLY MOUNT WEATHERPROOF 120V CONVENIENCE OUTLET ON UNISTRUT/KINDORF. COORDINATE WITH OTHER TRADES PRIOR TO

NO WORK

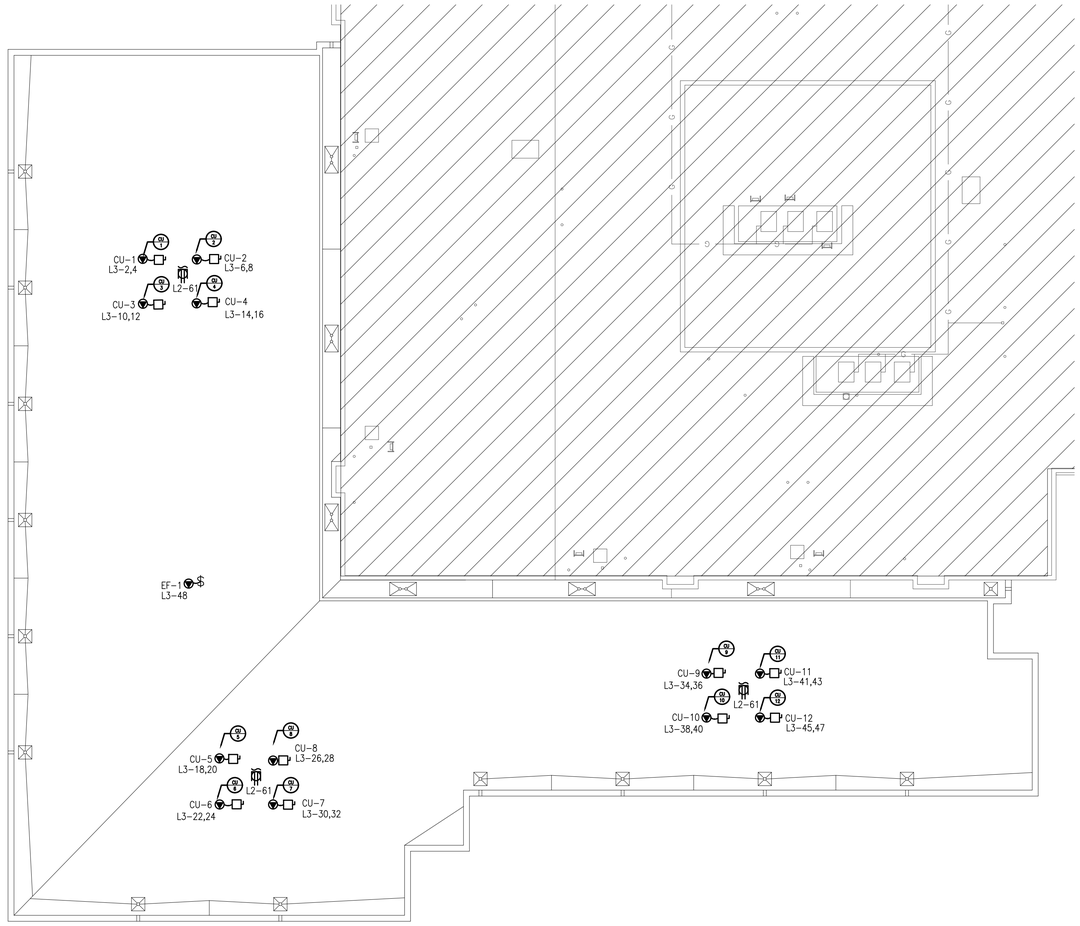

1 OVERALL POWER PLAN - ROOF AREA A

SCALE: 1/16" = 1'-0"

NORTH

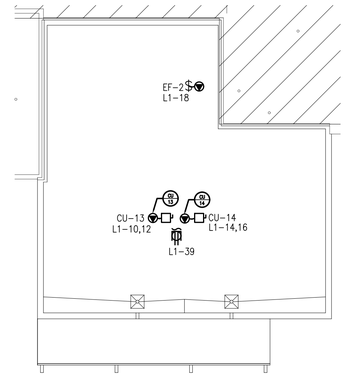

1 OVERALL POWER PLAN - ROOF AREA B

SCALE: 1/16" = 1'-0"

NORTH

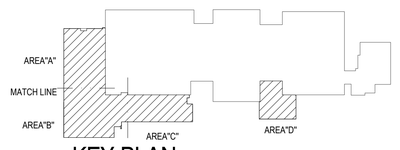

KEY PLAN

NORTH

Salas O'Brien

2600 Van Buren St., Suite 2635
Norman, OK 73072
Salas O'Brien Registration: CA# 7058
Expiration Date : 6/30/2025

Salas O'Brien Project Number: 2023-02792-00

AGP

the Abla Griffin Partnership L.L.C.

201 N. BROADWAY
SUITE 210
MOORE, OK. 73160
405.735.3477
AGP@theAGP.net
www.theAGP.net

CEDAR CREEK
CIVIL

KFC ENGINEERING
STRUCTURAL

SALAS O'BRIEN
MECHANICAL / ELECTRICAL

GT
drawn by

TVO
checked by

JULY 2023
date

revisions

MOORE PUBLIC SCHOOLS
BOARD OF EDUCATION
MOORE, OKLAHOMA

MOORE Public Schools
LEARNING FOR LIFE

CLASSROOM ADDITION
HIGHLAND WEST
JUNIOR HIGH SCHOOL

sheet no:

E211

OWNERSHIP USE OF DOCUMENTS:

AGP EXPRESSLY RESERVES ITS COPYRIGHT AND OTHER PROPERTY RIGHTS OF ALL PLANS AND DRAWINGS DESIGNED AND/OR PRODUCED. PLANS AND DRAWINGS ARE NOT TO BE REPRODUCED IN ANY FORM OR MANNER WITHOUT THE EXPRESSED WRITTEN CONSENT OF AGP.

GENERAL NOTES

1. AIC RATINGS ARE ESTIMATED BASED ON AVAILABLE DATA DURING DESIGN. CONTRACTOR TO VERIFY AVAILABLE FAULT CURRENT WITH UTILITY.
2. FAULT CURRENT, ARC FLASH, AND COORDINATION STUDY SHALL BE PERFORMED BY A THIRD PARTY ONCE EXACT PANEL PLACEMENT AND DISTANCES ARE DETERMINED. REFER TO SPECIFICATIONS SECTION 26 0573 FOR MORE INFORMATION.
3. PROVIDE A MINIMUM OF 10 SPARE 1P20A BREAKERS FOR EACH 120V SUB-PANEL.

FEEDER SCHEDULE

AMPS	CONDUIT SIZE 4W	CONDUIT SIZE 3W	PHASE CONDUCTORS	EQUIPMENT GROUND CONDUCTOR
20	3/4"	3/4"	#12	#12
25	3/4"	3/4"	#10	#10
30	3/4"	3/4"	#10	#10
35	1"	3/4"	#8	#10
40	1"	3/4"	#8	#10
45	1"	1"	#6	#10
50	1"	1"	#6	#10
60	1 1/4"	1 1/4"	#4	#10
70	1 1/4"	1 1/4"	#4	#8
80	1 1/4"	1 1/4"	#3	#8
90	1 1/2"	1 1/4"	#2	#8
100	1 1/2"	1 1/4"	#1	#8
110	2"	1 1/2"	#2	#6
125	2"	1 1/2"	#1	#6
150	2"	1 1/2"	#1/0	#6
175	2"	2"	#2/0	#6
200	2"	2"	#3/0	#6
225	2 1/2"	2"	#4/0	#4
250	3"	2 1/2"	250 kcmil	#4
300	3"	3"	350 kcmil	#4
350	3 1/2"	3"	500 kcmil	#3
400	(2) 2"	(2) 2"	2 SETS OF #3/0	#3
450	(2) 2 1/2"	(2) 2"	2 SETS OF #4/0	#2
500	(2) 2 1/2"	(2) 2 1/2"	2 SETS OF 250 kcmil	#2
600	(2) 3"	(2) 3"	2 SETS OF 350 kcmil	#1
700	(2) 3 1/2"	(2) 3"	2 SETS OF 500 kcmil	#1/0
800	(3) 3"	(3) 2 1/2"	3 SETS OF 300 kcmil	#1/0
900	(3) 3 1/2"	(3) 3"	3 SETS OF 400 kcmil	#2/0
1000	(3) 3 1/2"	(3) 3"	3 SETS OF 500 kcmil	#2/0
1200	(4) 3"	(4) 3"	4 SETS OF 350 kcmil	#3/0
1600	(5) 3 1/2"	(5) 3"	5 SETS OF 500 kcmil	#4/0
1800	(6) 3 1/2"	(6) 3"	6 SETS OF 400 kcmil	250 kcmil
2000	(6) 3 1/2"	(6) 3"	6 SETS OF 500 kcmil	250 kcmil

NOTES:

1. FEEDER SIZES ARE ON THE PLAN WHERE 60 REFERS TO A 60A FEEDER WITHOUT NEUTRAL AND 60N REFERS TO A 60A FEEDER WITH NEUTRAL.
2. SOME FEEDER SIZES DO NOT MATCH BREAKER SIZE DUE TO UP-SIZING OF THE FEEDER FOR VOLTAGE DROP.
3. CONDUITS ARE SIZED PER NEC TABLES FOR THHN/THWN AND MAY BE UPSIZED FOR EASE OF PULLING OR DOWNSIZED AS ALLOWED PER NEC FOR CONDUIT TYPE(S) BEING INSTALLED.
4. ALL CONDUCTORS 100A AND LESS ARE SIZED PER 60 DEGREE LUGS, EC MAY SIZE CONDUCTORS FOR ACTUAL RATING OF LUGS PER NEC.

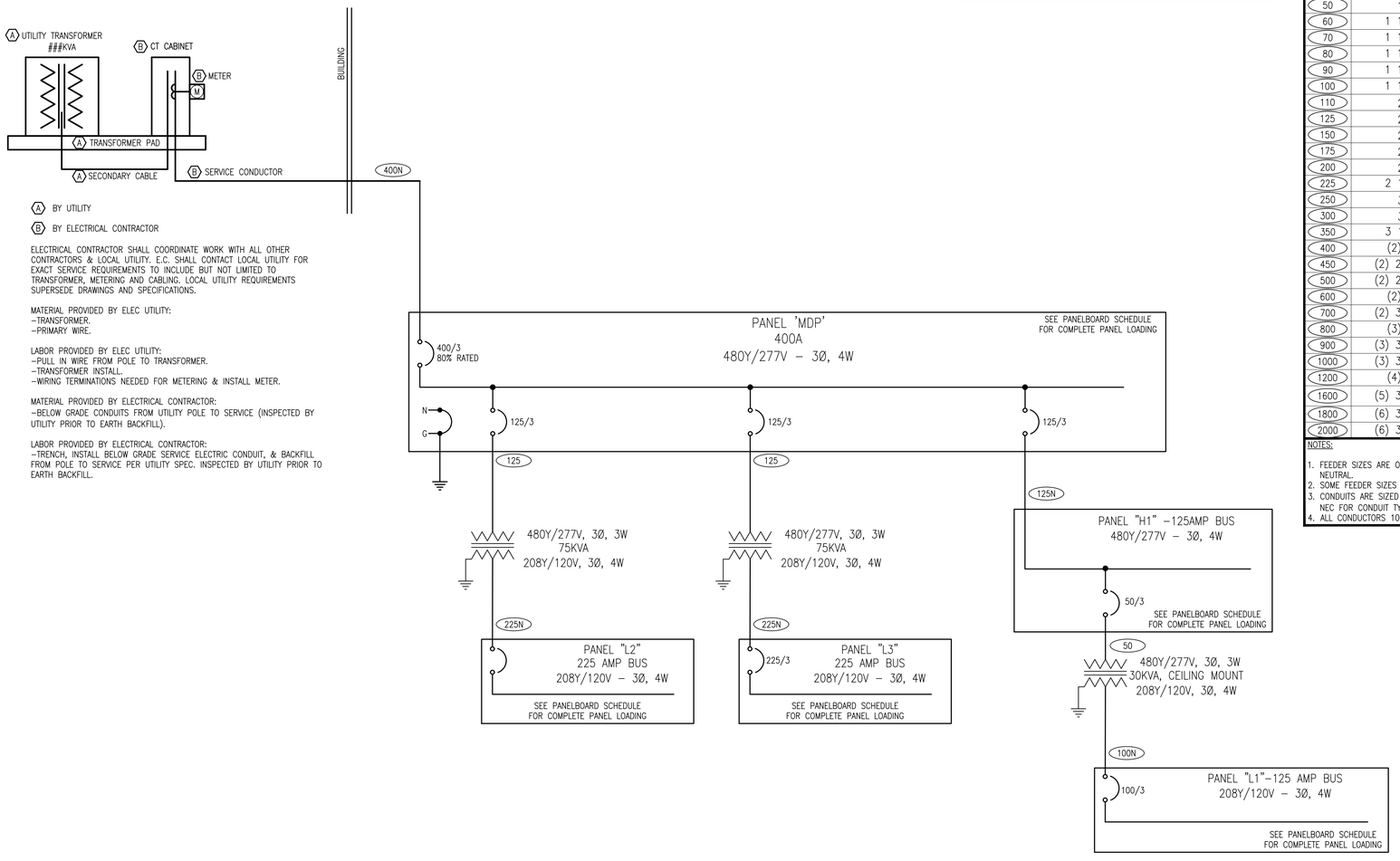

A BY UTILITY

B BY ELECTRICAL CONTRACTOR

ELECTRICAL CONTRACTOR SHALL COORDINATE WORK WITH ALL OTHER CONTRACTORS & LOCAL UTILITY. E.C. SHALL CONTACT LOCAL UTILITY FOR EXACT SERVICE REQUIREMENTS TO INCLUDE BUT NOT LIMITED TO TRANSFORMER, METERING AND CABLING. LOCAL UTILITY REQUIREMENTS SUPERSEDE DRAWINGS AND SPECIFICATIONS.

MATERIAL PROVIDED BY ELEC UTILITY:
–TRANSFORMER.
–PRIMARY WIRE.

LABOR PROVIDED BY ELEC UTILITY:
–PULL IN WIRE FROM POLE TO TRANSFORMER.
–TRANSFORMER INSTALL.
–WIRING TERMINATIONS NEEDED FOR METERING & INSTALL METER.

MATERIAL PROVIDED BY ELECTRICAL CONTRACTOR:
–BELOW GRADE CONDUITS FROM UTILITY POLE TO SERVICE (INSPECTED BY UTILITY PRIOR TO EARTH BACKFILL).

LABOR PROVIDED BY ELECTRICAL CONTRACTOR:
–TRENCH, INSTALL BELOW GRADE SERVICE ELECTRIC CONDUIT, & BACKFILL FROM POLE TO SERVICE PER UTILITY SPEC. INSPECTED BY UTILITY PRIOR TO EARTH BACKFILL.

1 ELECTRICAL ONE-LINE DIAGRAM

NO SCALE

AGP
the Abla Griffin Partnership L.L.C.
201 N. BROADWAY
SUITE 210
MOORE, OK. 73160
405.735.3477
AGP@theAGP.net
www.theAGP.net

KFC ENGINEERING
STRUCTURAL

SALAS O'BRIEN
MECHANICAL / ELECTRICAL

GT
drawn by

TVO
checked by

JUNE 2022
date

revisions

MOORE PUBLIC SCHOOLS
BOARD OF EDUCATION
MOORE, OKLAHOMA

MOORE Public Schools
LEARNING FOR LIFE

CLASSROOM ADDITION
SOUTHRIDGE
JUNIOR HIGH SCHOOL

sheet no:

E401

Salas O'Brien
2600 Van Buren St., Suite 2635
Norman, OK 73072
Salas O'Brien Registration: CA# 7058
Expiration Date : 6/30/2025
Salas O'Brien Project Number: 2023-02792-00

OWNERSHIP USE OF DOCUMENTS:

AGP EXPRESSLY RESERVES ITS COPYRIGHT AND OTHER PROPERTY RIGHTS OF ALL PLANS AND DRAWINGS DESIGNED AND/OR PRODUCED. PLANS AND DRAWINGS ARE NOT TO BE REPRODUCED IN ANY FORM OR MANNER WITHOUT THE EXPRESSED WRITTEN CONSENT OF AGP.

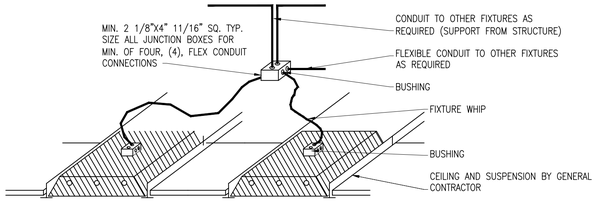

4 TYP.TROFFER POWER DETAIL
NO SCALE

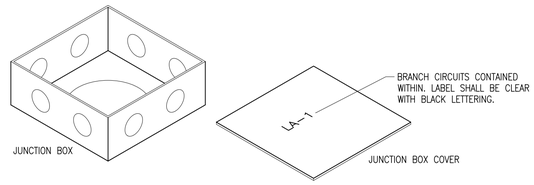

3 JUNCTION BOX DETAIL
NO SCALE

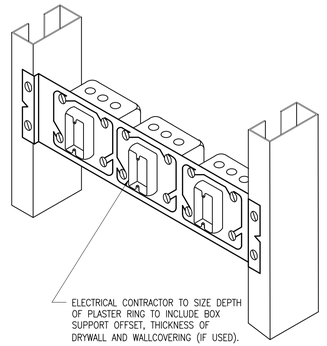

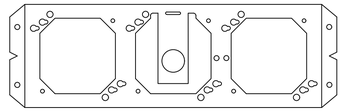

2 MULTIPLE BOX SUPPORT DETAIL
NO SCALE

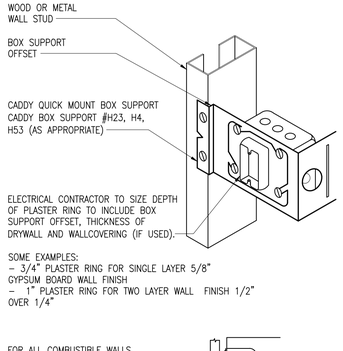

1 BOX SUPPORT DETAIL
NO SCALE

DATA & POWER OUTLET NEAR TEACHERS DESK

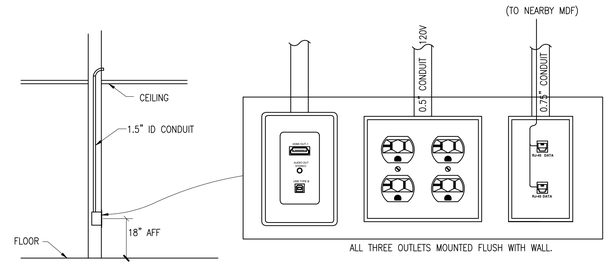

POWER OUTLET BEHIND SMARTBOARD

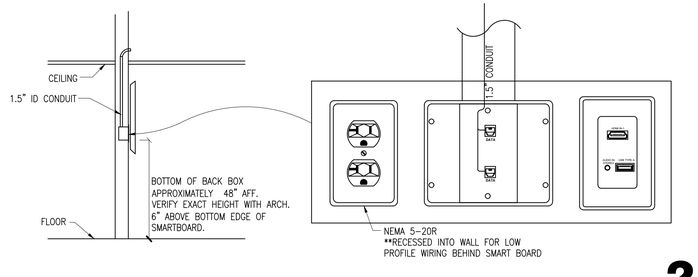

5 TEACHERS DESK & SMART BOARD WIRING DETAIL
NO SCALE

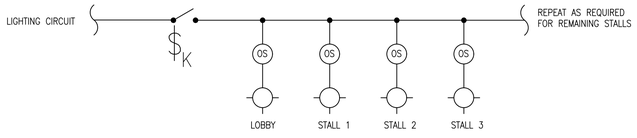

8 RESTROOM LIGHTING CONTROL DETAIL
NO SCALE

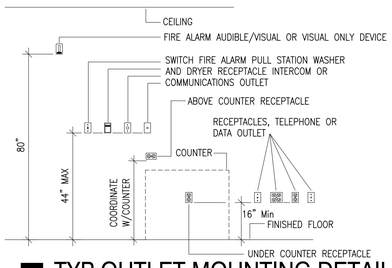

7 TYP OUTLET MOUNTING DETAIL
NO SCALE

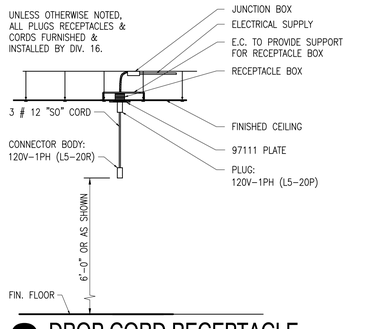

9 DROP CORD RECEPTACLE
NO SCALE

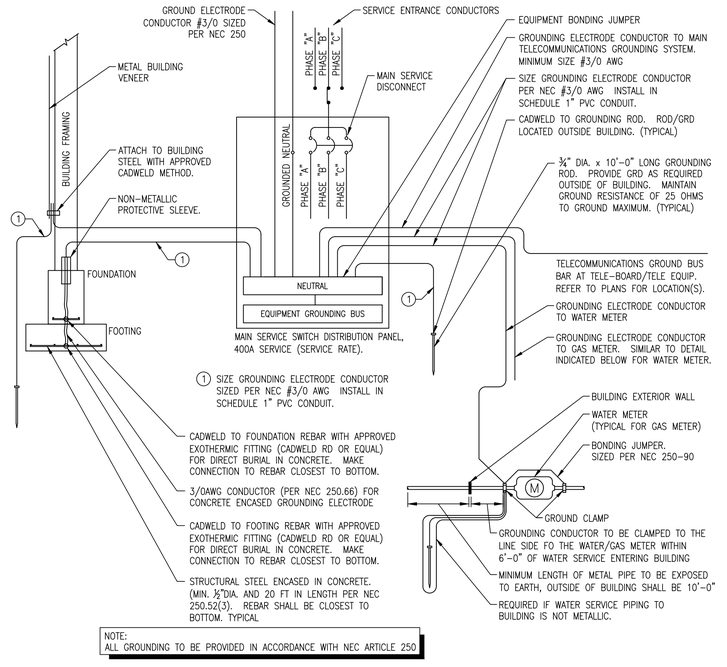

6 MAIN ELECTRICAL GROUNDING DETAIL
NO SCALE

AGP
the Abla Griffin Partnership L.L.C.
201 N. BROADWAY
SUITE 210
MOORE, OK. 73160
405.735.3477
AGP@theAGP.net
www.theAGP.net

CEDAR CREEK
CIVIL

KFC ENGINEERING
STRUCTURAL

SALAS O'BRIEN
MECHANICAL / ELECTRICAL

XX
drawn by

TVO
checked by

JULY 2023
date

revisions

MOORE PUBLIC SCHOOLS
BOARD OF EDUCATION
MOORE, OKLAHOMA

MOORE Public Schools
LEARNING FOR LIFE

CLASSROOM ADDITION
HIGHLAND WEST
JUNIOR HIGH SCHOOL

sheet no:

E501

Salas O'Brien
2600 Van Buren St., Suite 2635
Norman, OK 73072
Salas O'Brien Registration: CA# 7058
Expiration Date : 6/30/2025
Salas O'Brien Project Number: 2023-02792-00

OWNERSHIP USE OF DOCUMENTS:

AGP EXPRESSLY RESERVES ITS COPYRIGHT AND OTHER PROPERTY RIGHTS OF ALL PLANS AND DRAWINGS DESIGNED AND/OR PRODUCED. PLANS AND DRAWINGS ARE NOT TO BE REPRODUCED IN ANY FORM OR MANNER WITHOUT THE EXPRESSED WRITTEN CONSENT OF AGP.

MECHANICAL EQUIPMENT SCHEDULE

CALLOUT	DESCRIPTION	VOLTS	HP	KVA	MCA	MOCP	CIRCUIT	WIRE CALLOUT	DISCONNECT	DISC PROV BY	DISC INST BY
CP-1	CIRCULATION PUMP	120V 1P 2W	1/6 HP	0.53	5.5	15	L3-51	3/4"C,1#12,#12N,#12G	DUPLEX RECEPTACLE	EC	EC
CU-1	CONDENSING UNIT	208V 2P 2W		5.23	31.4	50	L3-2,4	3/4"C,2#8,#10G	NON-FUSED	EC	EC
CU-2	CONDENSING UNIT	208V 2P 2W		5.23	31.4	50	L3-6,8	3/4"C,2#8,#10G	NON-FUSED	EC	EC
CU-3	CONDENSING UNIT	208V 2P 2W		5.23	31.4	50	L3-10,12	3/4"C,2#8,#10G	NON-FUSED	EC	EC
CU-4	CONDENSING UNIT	208V 2P 2W		5.23	31.4	50	L3-14,16	3/4"C,2#8,#10G	NON-FUSED	EC	EC
CU-5	CONDENSING UNIT	208V 2P 2W		5.23	31.4	50	L3-18,20	3/4"C,2#8,#10G	NON-FUSED	EC	EC
CU-6	CONDENSING UNIT	208V 2P 2W		5.23	31.4	50	L3-22,24	3/4"C,2#8,#10G	NON-FUSED	EC	EC
CU-7	CONDENSING UNIT	208V 2P 2W		5.23	31.4	50	L3-30,32	3/4"C,2#8,#10G	NON-FUSED	EC	EC
CU-8	CONDENSING UNIT	208V 2P 2W		5.23	31.4	50	L3-26,28	3/4"C,2#8,#10G	NON-FUSED	EC	EC
CU-9	CONDENSING UNIT	208V 2P 2W		5.23	31.4	50	L3-34,36	3/4"C,2#8,#10G	NON-FUSED	EC	EC
CU-10	CONDENSING UNIT	208V 2P 2W		5.23	31.4	50	L3-38,40	3/4"C,2#8,#10G	NON-FUSED	EC	EC
CU-11	CONDENSING UNIT	208V 2P 2W		5.23	31.4	50	L3-41,43	3/4"C,2#8,#10G	NON-FUSED	EC	EC
CU-12	CONDENSING UNIT	208V 2P 2W		5.23	31.4	50	L3-45,47	3/4"C,2#8,#10G	NON-FUSED	EC	EC
CU-13	CONDENSING UNIT	208V 2P 2W		5.23	31.4	50	L1-10,12	3/4"C,2#8,#10G	NON-FUSED	EC	EC
CU-14	CONDENSING UNIT	208V 2P 2W		5.23	31.4	50	L1-14,16	3/4"C,2#8,#10G	NON-FUSED	EC	EC
EF-1	EXHAUST FAN	120V 1P 2W	F HP	0.1	0.6	15	L3-48	3/4"C,1#10,#10N,#10G	TOGGLE SWITCH	MC	EC
EF-2	EXHAUST FAN	120V 1P 2W	F HP	0.1	0.6	15	L1-18	3/4"C,1#10,#10N,#10G	TOGGLE SWITCH	MC	EC
EFH-1	ELECTRIC FAN HEATER	208V 2P 2W		2	12	20	L3-5,7	3/4"C,2#10,#10G	NON-FUSED	MC	EC
EFH-2	ELECTRIC FAN HEATER	208V 2P 2W		2	12	20	L3-23,25	3/4"C,2#10,#10G	NON-FUSED	MC	EC
EFH-3	ELECTRIC FAN HEATER	208V 2P 2W		1.15	12	20	L3-15,17	3/4"C,2#10,#10G	NON-FUSED	MC	EC
EFH-4	ELECTRIC FAN HEATER	208V 2P 2W		2	12	20	L3-37,39	3/4"C,2#10,#10G	NON-FUSED	MC	EC
EFH-5	ELECTRIC FAN HEATER	208V 2P 2W		2	12	20	L1-2,4	3/4"C,2#10,#10G	NON-FUSED	MC	EC
F-1	GAS FURNACE	120V 1P 2W	F HP	0.1	1.03	15	L3-1	3/4"C,1#10,#10N,#10G	DUPLEX RECEPTACLE	MC	EC
F-2	GAS FURNACE	120V 1P 2W	F HP	0.1	1.03	15	L3-3	3/4"C,1#10,#10N,#10G	DUPLEX RECEPTACLE	MC	EC
F-3	GAS FURNACE	120V 1P 2W	F HP	0.1	1.03	15	L3-9	3/4"C,1#12,#12N,#12G	DUPLEX RECEPTACLE	MC	EC
F-4	GAS FURNACE	120V 1P 2W	F HP	0.1	1.03	15	L3-11	3/4"C,1#12,#12N,#12G	DUPLEX RECEPTACLE	MC	EC
F-5	GAS FURNACE	120V 1P 2W	F HP	0.1	1.03	15	L3-19	3/4"C,1#12,#12N,#12G	DUPLEX RECEPTACLE	MC	EC
F-6	GAS FURNACE	120V 1P 2W	F HP	0.1	1.03	15	L3-13	3/4"C,1#10,#10N,#10G	DUPLEX RECEPTACLE	MC	EC
F-7	GAS FURNACE	120V 1P 2W	F HP	0.1	1.03	15	L3-21	3/4"C,1#10,#10N,#10G	DUPLEX RECEPTACLE	MC	EC
F-8	GAS FURNACE	120V 1P 2W	F HP	0.1	1.03	15	L3-31	3/4"C,1#10,#10N,#10G	DUPLEX RECEPTACLE	MC	EC
F-9	GAS FURNACE	120V 1P 2W	F HP	0.1	1.03	15	L3-27	3/4"C,1#10,#10N,#10G	DUPLEX RECEPTACLE	MC	EC
F-10	GAS FURNACE	120V 1P 2W	F HP	0.1	1.03	15	L3-33	3/4"C,1#10,#10N,#10G	DUPLEX RECEPTACLE	MC	EC
F-11	GAS FURNACE	120V 1P 2W	F HP	0.1	1.03	15	L3-29	3/4"C,1#10,#10N,#10G	DUPLEX RECEPTACLE	MC	EC
F-12	GAS FURNACE	120V 1P 2W	F HP	0.1	1.03	15	L3-35	3/4"C,1#10,#10N,#10G	DUPLEX RECEPTACLE	MC	EC
F-13	GAS FURNACE	120V 1P 2W	F HP	0.1	1.03	15	L1-8	3/4"C,1#10,#10N,#10G	DUPLEX RECEPTACLE	MC	EC
F-14	GAS FURNACE	120V 1P 2W	F HP	0.1	1.03	15	L1-6	3/4"C,1#12,#12N,#12G	DUPLEX RECEPTACLE	MC	EC
WH-1	WATER HEATER	120V 1P 2W		0.24	2.5	20	L3-53	3/4"C,1#12,#12N,#12G	DUPLEX RECEPTACLE	EC	EC
WH-2	WATER HEATER	120V 1P 2W		0.24	2.5	20	L3-49	3/4"C,1#12,#12N,#12G	DUPLEX RECEPTACLE	EC	EC

Panel MDP — ROOM MECH; MOUNTING SURFACE; FED FROM UTILITY; NOTE — VOLTS 480Y/277V 3P 4W; BUS AMPS 400; NEUTRAL 100% — AIC 65,000; MAIN BKR 400; LUGS STANDARD

CKT #	CKT BKR	LOAD KVA	CIRCUIT DESCRIPTION		CKT #	CKT BKR	LOAD KVA	CIRCUIT DESCRIPTION
1	125/3	37.4	XFMR T1	a	2	20/1	2.94	LIGHTING
3	|			b	4	20/1	2.78	LIGHTING
5	|			c	6	20/1	2.11	LIGHTING
7	125/3	74.1	XFMR T2	a	8	20/1	2.72	LIGHTING
9	|			b	10	20/1	0.499	EXTERIOR LIGHTING
11	|			c	12	20/1	0	SPACE
13	125/3	22.8	PANEL H1	a	14	20/1	0	SPACE
15	|			b	16	20/1	0	SPACE
17	|			c	18	20/1	0	SPACE
19	20/1	0	SPACE	a	20	20/1	0	SPACE
21	20/1	0	SPACE	b	22	20/1	0	SPACE
23	20/1	0	SPACE	c	24	20/1	0	SPACE
25	20/1	0	SPACE	a	26	20/1	0	SPACE
27	20/1	0	SPACE	b	28	20/1	0	SPACE
29	20/1	0	SPACE	c	30	20/1	0	SPACE
31	20/1	0	SPACE	a	32	20/1	0	SPACE
33	20/1	0	SPACE	b	34	20/1	0	SPACE
35	20/1	0	SPACE	c	36	20/1	0	SPACE
37	20/1	0	SPACE	a	38	20/1	0	SPACE
39	20/1	0	SPACE	b	40	20/1	0	SPACE
41	20/1	0	SPACE	c	42	20/1	0	SPACE

	CONN KVA	CALC KVA			CONN KVA	CALC KVA	
LIGHTING	12.8	16	(125%)	RECEPTACLES	47.6	28.8	(50%>10)
LARGEST MOTOR	5.23	1.31	(25%)	HEATING	9.14	0	(0%)
MOTORS	2.61	2.61	(100%)	COOLING	73.2	73.2	(100%)
				TOTAL LOAD		122	
				BALANCED 3-PHASE LOAD		147 A	
				PHASE A		108%	
				PHASE B		102%	
				PHASE C		90.3%	

Panel L2 — ROOM MECH; MOUNTING SURFACE; FED FROM T1; NOTE — VOLTS 208Y/120V 3P 4W; BUS AMPS 225; NEUTRAL 100% — AIC 65,000; MAIN BKR 225; LUGS STANDARD

CKT #	CKT BKR	LOAD KVA	CIRCUIT DESCRIPTION		CKT #	CKT BKR	LOAD KVA	CIRCUIT DESCRIPTION
1	20/1	0.54	ROOM 2 RCPT, SMART BOARD RCPT	a	2	20/1	0.72	ROOM 13 RCPT, SMART BOARD RCPT
3	20/1	0.72	ROOM 2 RCPT	b	4	20/1	0.36	ROOM 13 RCPT
5	20/1	0.54	ROOM 2 RCPT	c	6	20/1	0.54	ROOM 14 RCPT
7	20/1	0.72	DROP CORD RCPT	a	8	20/1	0.54	ROOM 14 RCPT, SMART BOARD RCPT
9	20/1	0.72	ROOM 3 RCPT, SMART BOARD RCPT	b	10	20/1	0.72	ROOM 15 DROP CORD RCPT
11	20/1	0.72	ROOM 3 RCPT	c	12	20/1	0.72	ROOM 15 RCPT
13	20/1	0.54	ROOM 3 RCPT	a	14	20/1	0.54	ROOM 15 RCPT
15	20/1	0.72	ROOM 3 DROP CORD RCPT	b	16	20/1	0.72	ROOM 16 RCPT
17	20/1	0.72	ROOM 4 RCPT	c	18	20/1	0.5	PRINTER
19	20/1	0.72	ROOM 4 RCPT	a	20	20/1	0.72	ROOM 17 DROP CORD RCPT
21	20/1	0.72	ROOM 5 RCPT	b	22	20/1	0.72	ROOM 17 RCPT, SMART BOARD RCPT
23	20/1	0.72	ROOM 5 RCPT	c	24	20/1	0.72	ROOM 17 RCPT
25	20/1	0.72	ROOM 6 RCPT	a	26	20/1	0.54	ROOM 17 RCPT
27	20/1	0.72	ROOM 6 RCPT, SMART BOARD RCPT	b	28	20/1	0.54	ROOM 18 RCPT, ROOM 19 RCPT
29	20/1	0.54	ROOM 6 RCPT	c	30	20/1	0.36	ROOM 14 RCPT
31	20/1	0.72	ROOM 6 DROP CORD RCPT	a	32	20/1	0.72	ROOM 22 RCPT, SMART BOARD
33	20/1	0.72	ROOM 7 DROP CORD RCPT	b	34	20/1	0.54	ROOM 22 RCPT
35	20/1	0.54	ROOM 7 RCPT	c	36	20/1	0.54	ROOM 22 RCPT
37	20/1	0.72	ROOM 7 RCPT	a	38	20/1	0.72	ROOM 23 RCPT, SMART BOARD
39	20/1	0.72	ROOM 7 RCPT, SMART BOARD RCPT	b	40	20/1	0.54	ROOM 23 RCPT
41	20/1	0.72	CORRIDOR 8 RCPT	c	42	20/1	0.54	ROOM 23 RCPT
43	20/1	0.72	ROOM 9 RCPT	a	44	20/1	0.72	ROOM 24 RCPT, SMART BOARD
45	20/1	0.54	ROOM 9 RCPT	b	46	20/1	0.54	ROOM 24 RCPT
47	20/1	0.36	ROOM 10 RCPT	c	48	20/1	0.54	ROOM 24 RCPT
49	20/1	0.54	TOILET RCPT	a	50	20/1	0.72	RECEPTACLE, ROOM 25 RCPT
51	20/1	0.72	ROOM 12 RCPT	b	52	20/1	0.54	ROOM 25 RCPT
53	20/1	0.72	ROOM 13 RCPT	c	54	20/1	0.72	ROOM 25 RCPT, SMART BOARD
55	20/1	0.5	PRINTER	a	56	20/1	0.54	ROOM 20,21 RCPT
57	20/1	0.72	ROOM 15 RCPT	b	58	20/1	0.36	ROOM 12 RCPT
59	20/1	0.54	EXTERIOR RCPT	c	60	20/1	0	SPACE
61	20/1	0.54	ROOF RCPT	a	62	20/1	0	SPACE
63	20/1	0	SPACE	b	64	20/1	0	SPACE
65	20/1	0	SPACE	c	66	20/1	0	SPACE
67	20/1	0	SPACE	a	68	20/1	0	SPACE
69	20/1	0	SPACE	b	70	20/1	0	SPACE
71	20/1	0	SPACE	c	72	20/1	0	SPACE

	CONN KVA	CALC KVA			CALC KVA
RECEPTACLES	37.4	23.7	(50%>10)	TOTAL LOAD	23.7
				BALANCED 3-PHASE LOAD	65.7 A
				PHASE A	108%
				PHASE B	101%
				PHASE C	90.7%

Panel L3 — ROOM MECH; MOUNTING SURFACE; FED FROM T2; NOTE — VOLTS 208Y/120V 3P 4W; BUS AMPS 225; NEUTRAL 100% — AIC 65,000; MAIN BKR 225; LUGS STANDARD

CKT #	CKT BKR	LOAD KVA	CIRCUIT DESCRIPTION		CKT #	CKT BKR	LOAD KVA	CIRCUIT DESCRIPTION
1	15/1	0.1	F-1	a	2	50/2	5.23	CU-1
3	15/1	0.1	F-2	b	4	|		
5	20/2	2	EFH-1	c	6	50/2	5.23	CU-2
7	|			a	8	|		
9	15/1	0.1	F-3	b	10	50/2	5.23	CU-3
11	15/1	0.1	F-4	c	12	|		
13	15/1	0.1	F-6	a	14	50/2	5.23	CU-4
15	20/2	1.15	EFH-3	b	16	|		
17	|			c	18	50/2	5.23	CU-5
19	15/1	0.1	F-5	a	20	|		
21	15/1	0.1	F-7	b	22	50/2	5.23	CU-6
23	20/2	2	EFH-2	c	24	|		
25	|			a	26	50/2	5.23	CU-8
27	15/1	0.1	F-9	b	28	|		
29	15/1	0.1	F-11	c	30	50/2	5.23	CU-7
31	15/1	0.1	F-8	a	32	|		
33	15/1	0.1	F-10	b	34	50/2	5.23	CU-9
35	15/1	0.1	F-12	c	36	|		
37	20/2	2	EFH-4	a	38	50/2	5.23	CU-10
39	|			b	40	|		
41	50/2	5.23	CU-11	c	42	20/1	0.72	TRAP PRIMER
43	|			a	44	20/1	0.54	TRAP PRIMER
45	50/2	5.23	CU-12	b	46	20/1	0.72	RECEPTACLE
47	|			c	48	15/1	0.1	EF-1
49	20/1	0.24	WH-2	a	50	20/1	0	SPACE
51	15/1	0.528	CP-1	b	52	20/1	0	SPACE
53	20/1	0.24	WH-1	c	54	20/1	0	SPACE
55	20/1	0	SPACE	a	56	20/1	0	SPACE
57	20/1	0	SPACE	b	58	20/1	0	SPACE
59	20/1	0	SPACE	c	60	20/1	0	SPACE
61	20/1	0	SPACE	a	62	20/1	0	SPACE
63	20/1	0	SPACE	b	64	20/1	0	SPACE

	CONN KVA	CALC KVA			CONN KVA	CALC KVA	
LARGEST MOTOR	5.23	1.31	(25%)	RECEPTACLES	1.98	1.98	(50%>10)
MOTORS	2.31	2.31	(100%)	HEATING	7.14	0	(0%)
				COOLING	62.7	62.7	(100%)
				TOTAL LOAD		68.3	
				BALANCED 3-PHASE LOAD		190 A	
				PHASE A		101%	
				PHASE B		98%	
				PHASE C		101%	

Panel L1 — ROOM STORAGE; MOUNTING SURFACE; FED FROM T3; NOTE — VOLTS 208Y/120V 3P 4W; BUS AMPS 125; NEUTRAL 100% — AIC 65,000; MAIN BKR 125; LUGS STANDARD

CKT #	CKT BKR	LOAD KVA	CIRCUIT DESCRIPTION		CKT #	CKT BKR	LOAD KVA	CIRCUIT DESCRIPTION
1	20/1	0.36	ROOM 38 RCPT	a	2	20/2	2	EFH-5
3	20/1	0.54	ROOM 38 RCPT	b	4	|		
5	20/1	0.36	ROOM 37 RCPT	c	6	15/1	0.1	F-14
7	20/1	0.54	ROOM 37 RCPT	a	8	15/1	0.1	F-13
9	20/1	0.54	ROOM 36 RCPT	b	10	50/2	5.23	CU-13
11	20/1	0.54	ROOM 36 RCPT	c	12	|		
13	20/1	0.36	ROOM 40 RCPT	a	14	50/2	5.23	CU-14
15	20/1	0.54	ROOM 39,40 RCPT	b	16	|		
17	20/1	0.54	ROOM 33,34,35 RCPT	c	18	15/1	0.1	EF-2
19	20/1	0.54	ROOM 32 RCPT	a	20	20/1	0	SPACE
21	20/1	0.36	ROOM 30 RCPT	b	22	20/1	0	SPACE
23	20/1	0.54	ROOM 31 RCPT	c	24	20/1	0	SPACE
25	20/1	0.54	ROOM 31 RCPT	a	26	20/1	0	SPACE
27	20/1	0.54	RECEPTACLE, ROOM 29 RCPT	b	28	20/1	0	SPACE
29	20/1	0.36	ROOM 32 RCPT	c	30	20/1	0	SPACE
31	20/1	0.36	ROOM 27,28 RCPT	a	32	20/1	0	SPACE
33	20/1	0	SPACE	b	34	20/1	0	SPACE
35	20/1	0.36	ROOM 36 RCPT	c	36	20/1	0	SPACE
37	20/1	0.18	EXTERIOR RCPT	a	38	20/1	0	SPACE
39	20/1	0.18	ROOF RCPT	b	40	20/1	0	SPACE
41	20/1	0	SPACE	c	42	20/1	0	SPACE

	CONN KVA	CALC KVA			CONN KVA	CALC KVA	
LARGEST MOTOR	5.23	1.31	(25%)	RECEPTACLES	8.28	8.28	(50%>10)
MOTORS	0.3	0.3	(100%)	HEATING	2	0	(0%)
				COOLING	10.5	10.5	(100%)
				TOTAL LOAD		20.3	
				BALANCED 3-PHASE LOAD		56.4 A	
				PHASE A		96.1%	
				PHASE B		124%	
				PHASE C		79.5%	

Panel H1 — ROOM STORAGE; MOUNTING SURFACE; FED FROM MDP; NOTE — VOLTS 480Y/277V 3P 4W; BUS AMPS 125; NEUTRAL 100% — AIC 65,000; MAIN BKR MLO; LUGS STANDARD

CKT #	CKT BKR	LOAD KVA	CIRCUIT DESCRIPTION		CKT #	CKT BKR	LOAD KVA	CIRCUIT DESCRIPTION
1	50/3	21	XFMR T3	a	2	20/1	1.58	LIGHTING
3	|			b	4	20/1	0.208	LIGHTING
5	|			c	6	20/1	0	SPACE
7	20/1	0	SPACE	a	8	20/1	0	SPACE
9	20/1	0	SPACE	b	10	20/1	0	SPACE
11	20/1	0	SPACE	c	12	20/1	0	SPACE
13	20/1	0	SPACE	a	14	20/1	0	SPACE
15	20/1	0	SPACE	b	16	20/1	0	SPACE
17	20/1	0	SPACE	c	18	20/1	0	SPACE
19	20/1	0	SPACE	a	20	20/1	0	SPACE
21	20/1	0	SPACE	b	22	20/1	0	SPACE
23	20/1	0	SPACE	c	24	20/1	0	SPACE
25	20/1	0	SPACE	a	26	20/1	0	SPACE
27	20/1	0	SPACE	b	28	20/1	0	SPACE
29	20/1	0	SPACE	c	30	20/1	0	SPACE
31	20/1	0	SPACE	a	32	20/1	0	SPACE
33	20/1	0	SPACE	b	34	20/1	0	SPACE
35	20/1	0	SPACE	c	36	20/1	0	SPACE
37	20/1	0	SPACE	a	38	20/1	0	SPACE
39	20/1	0	SPACE	b	40	20/1	0	SPACE
41	20/1	0	SPACE	c	42	20/1	0	SPACE

	CONN KVA	CALC KVA			CONN KVA	CALC KVA	
LIGHTING	1.78	2.23	(125%)	RECEPTACLES	8.28	8.28	(50%>10)
LARGEST MOTOR	5.23	1.31	(25%)	HEATING	2	0	(0%)
MOTORS	0.3	0.3	(100%)	COOLING	10.5	10.5	(100%)
				TOTAL LOAD		22.6	
				BALANCED 3-PHASE LOAD		27.1 A	
				PHASE A		109%	
				PHASE B		118%	
				PHASE C		73.6%	

AGP
the Abla Griffin Partnership L.L.C.
201 N. BROADWAY
SUITE 210
MOORE, OK. 73160
405.735.3477
AGP@theAGP.net
www.theAGP.net

CEDAR CREEK
CIVIL

KFC ENGINEERING
STRUCTURAL

SALAS O'BRIEN
MECHANICAL / ELECTRICAL

XX
drawn by

TVO
checked by

JULY 2023
date

revisions

MOORE PUBLIC SCHOOLS
BOARD OF EDUCATION
MOORE, OKLAHOMA

MOORE Public Schools
LEARNING FOR LIFE

CLASSROOM ADDITION
HIGHLAND WEST
JUNIOR HIGH SCHOOL

sheet no:

E601

Salas O'Brien
2600 Van Buren St., Suite 2635
Norman, OK 73072
Salas O'Brien Registration: CA# 7058
Expiration Date : 6/30/2025
Salas O'Brien Project Number: 2023-02792-00

OWNERSHIP USE OF DOCUMENTS:

AGP EXPRESSLY RESERVES ITS COPYRIGHT AND OTHER PROPERTY RIGHTS OF ALL PLANS AND DRAWINGS DESIGNED AND/OR PRODUCED. PLANS AND DRAWINGS ARE NOT TO BE REPRODUCED IN ANY FORM OR MANNER WITHOUT THE EXPRESSED WRITTEN CONSENT OF AGP.

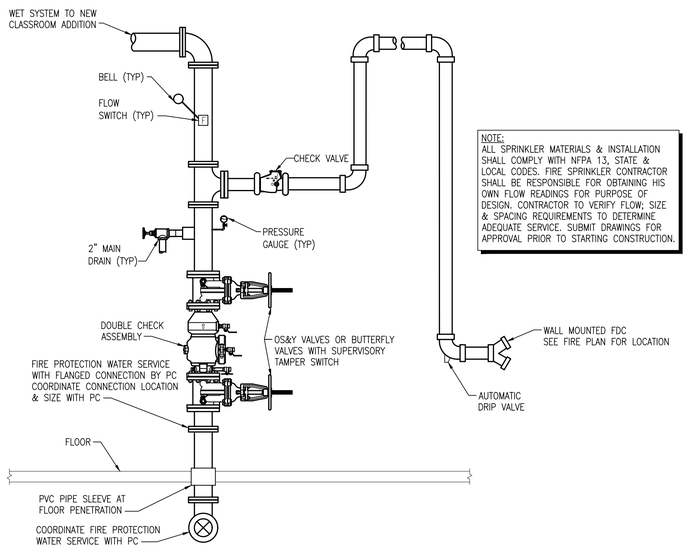

1 NEW FIRE SPRINKLER RISER DETAIL
NOT TO SCALE

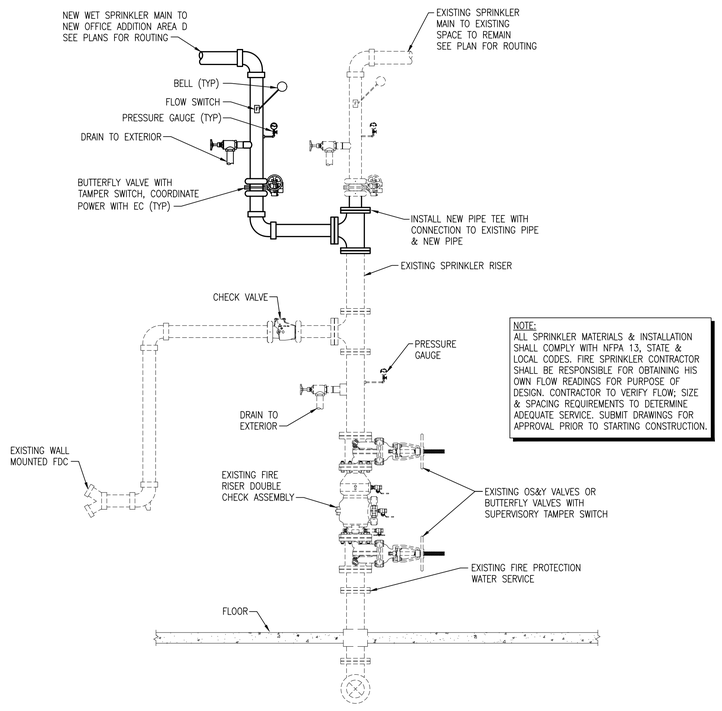

2 EXISTING FIRE SPRINKLER RISER DETAIL
NOT TO SCALE

FIRE PROTECTION ABBREVIATIONS

AG	ABOVE GRADE	FT	FOOT (FEET)
ADD	ADDENDUM	GAL	GALLON
ADDL	ADDITIONAL	GC	GENERAL CONTRACTOR
ADJ	ADJUSTABLE	GPM	GALLONS PER MINUTE
AFF	ABOVE FINISH FLOOR	MC	MECHANICAL CONTRACTOR
AFG	ABOVE FINISH GRADE	MECH	MECHANICAL
ALT	ALTERNATE	MIN	MINIMUM
BG	BELOW GRADE	NTS	NOT TO SCALE
CI	CAST IRON	PC	PLUMBING CONTRACTOR
COL	COLUMN	PLBG	PLUMBING
CW	COLD WATER	QTY	QUANTITY
DN	DOWN	SCH	SCHEDULE
EC	ELECTRICAL CONTRACTOR	SPEC	SPECIFICATIONS
FD	FLOOR DRAIN	SS	STAINLESS STEEL
FDC	FIRE DEPARTMENT CONNECTION	TEMP	TEMPERATURE
FLR	FLOOR	TYP	TYPICAL
FP	FIRE PROTECTION	W/	WITH

FIRE PROTECTION SYMBOL LEGEND

	SHUTOFF VALVE
	CHECK VALVE
	DOUBLE CHECK VALVE
	END CAP
	FIRE DEPARTMENT CONNECTION(FDC)
	BELL

FIRE PROTECTION PIPING LINETYPES

LINETYPE	DESCRIPTION
————	NEW – ABOVE GRADE
– – – – – – – – – –	NEW – BELOW GRADE

FIRE PROTECTION GENERAL NOTES

1. CONTRACTOR SHALL PROVIDE DESIGN FOR SPRINKLER SYSTEMS FOR NEW OFFICE ADDITION AND CLASSROOM ADDITION. OFFICE AREA TO BE SERVED BY EXISTING FIRE RISER IN MEDIA CENTER. CLASSROOM ADDITION TO BE SERVED BY NEW FIRE RISER.
2. COORDINATE INSTALLATION OF SPRINKLER PIPING AND ALL COMPONENTS WITH OTHER TRADES, OWNER, AND GENERAL CONTRACTOR.
3. FIRE PROTECTION SYSTEM TO COMPLY WITH NFPA 13, INSURANCE CARRIER AND ALL APPLICABLE STATE AND LOCAL CODES.
4. CUTTING OF STRUCTURAL AND/OR ARCHITECTURAL MEMBERS TO BE DONE ONLY WITH THE WRITTEN APPROVAL OF THE ARCHITECT AND STRUCTURAL ENGINEER.
5. PROVIDE MINIMUM 10 PSI SAFETY FACTOR.
6. WORKING DRAWINGS INDICATING SPRINKLER HEAD LOCATIONS AND EXPOSED AND CONCEALED PIPING ROUTING SHALL BE PROVIDED TO THE ARCHITECT/ENGINEER PRIOR TO INSTALLATION FOR APPROVAL.
7. FIRE PROTECTION CONTRACTOR IS RESPONSIBLE FOR ORGANIZING A COORDINATION MEETING WITH OTHER TRADES AND OWNER PRIOR TO INSTALLATION.
8. SYSTEM PIPING LOCATION: WET SYSTEM PIPING SHALL BE INSTALLED AT HIGHEST ELEVATION POSSIBLE. PIPING SHALL BE INSTALLED ABOVE ALL MECHANICAL EQUIPMENT, DUCTWORK, AND ALL PLUMBING SYSTEM PIPING. PROVIDE ADEQUATE CLEARANCE TO MECHANICAL UNITS. FIRE PROTECTION CONTRACTOR SHALL COORDINATE FIRE PROTECTION PIPING PRIOR TO INSTALLATION.
9. PROPERLY TORQUE MECHANICAL TEES TO MANUFACTURER'S RECOMMENDATIONS.
10. FIRE PROTECTION PLANS ARE FOR REFERENCE ONLY. OCCUPANCIES AND AREAS OF PROTECTION NOTED ON THE PLANS SHALL BE CONFIRMED WITH NFPA 13 AND AUTHORITIES HAVING JURISDICTION. THIS CONTRACTOR SHALL COMPLY WITH ANY CODE REQUIREMENTS AS REQUIRED.
11. REFER TO ARCHITECTURAL FIRE CODE PLAN FOR ADDITIONAL INFORMATION.
12. FIRESEAL ALL PENETRATIONS THRU RATED STRUCTURES TO MAINTAIN FIRE RATING.
13. SEMI–RECESSED PENDANT SPRINKLER HEADS SHALL HAVE WHITE FINISH.
14. UPRIGHT SPRINKLER HEADS SHALL BE BRASS. PROVIDE PROTECTIVE GUARD FOR HEAD.

FIRE PROTECTION SHEET INDEX

F000	FIRE PROTECTION NOTES & SYMBOLS
F001	FIRE PROTECTION PLAN – OVERALL
F101	FIRE PROTECTION PLAN – AREA A
F102	FIRE PROTECTION PLAN – AREA B
F103	FIRE PROTECTION PLAN – AREA C
F104	FIRE PROTECTION PLAN – AREA D

AGP
the Abla Griffin Partnership L.L.C.
201 N. BROADWAY
SUITE 210
MOORE, OK. 73160
405.735.3477
AGP@theAGP.net
www.theAGP.net

CEDAR CREEK
CIVIL

KFC ENGINEERING
STRUCTURAL

SALAS O'BRIEN
MECHANICAL / ELECTRICAL

PROFESSIONAL ENGINEER
Stewart McDonald
M30822
OKLAHOMA
08/13/23

KC
drawn by

KP
checked by

JULY 2023
date

revisions

MOORE PUBLIC SCHOOLS
BOARD OF EDUCATION
MOORE, OKLAHOMA

MOORE Public Schools
LEARNING FOR LIFE

CLASSROOM ADDITION
HIGHLAND WEST
JUNIOR HIGH SCHOOL

sheet no:

F000

Salas O'Brien
2600 Van Buren St., Suite 2635
Norman, OK 73072
Salas O'Brien Registration: CA# 7058
Expiration Date : 6/30/2025
Salas O'Brien Project Number: 2023-02792-00

OWNERSHIP USE OF DOCUMENTS:

AGP EXPRESSLY RESERVES ITS COPYRIGHT AND OTHER PROPERTY RIGHTS OF ALL PLANS AND DRAWINGS DESIGNED AND/OR PRODUCED. PLANS AND DRAWINGS ARE NOT TO BE REPRODUCED IN ANY FORM OR MANNER WITHOUT THE EXPRESSED WRITTEN CONSENT OF AGP.

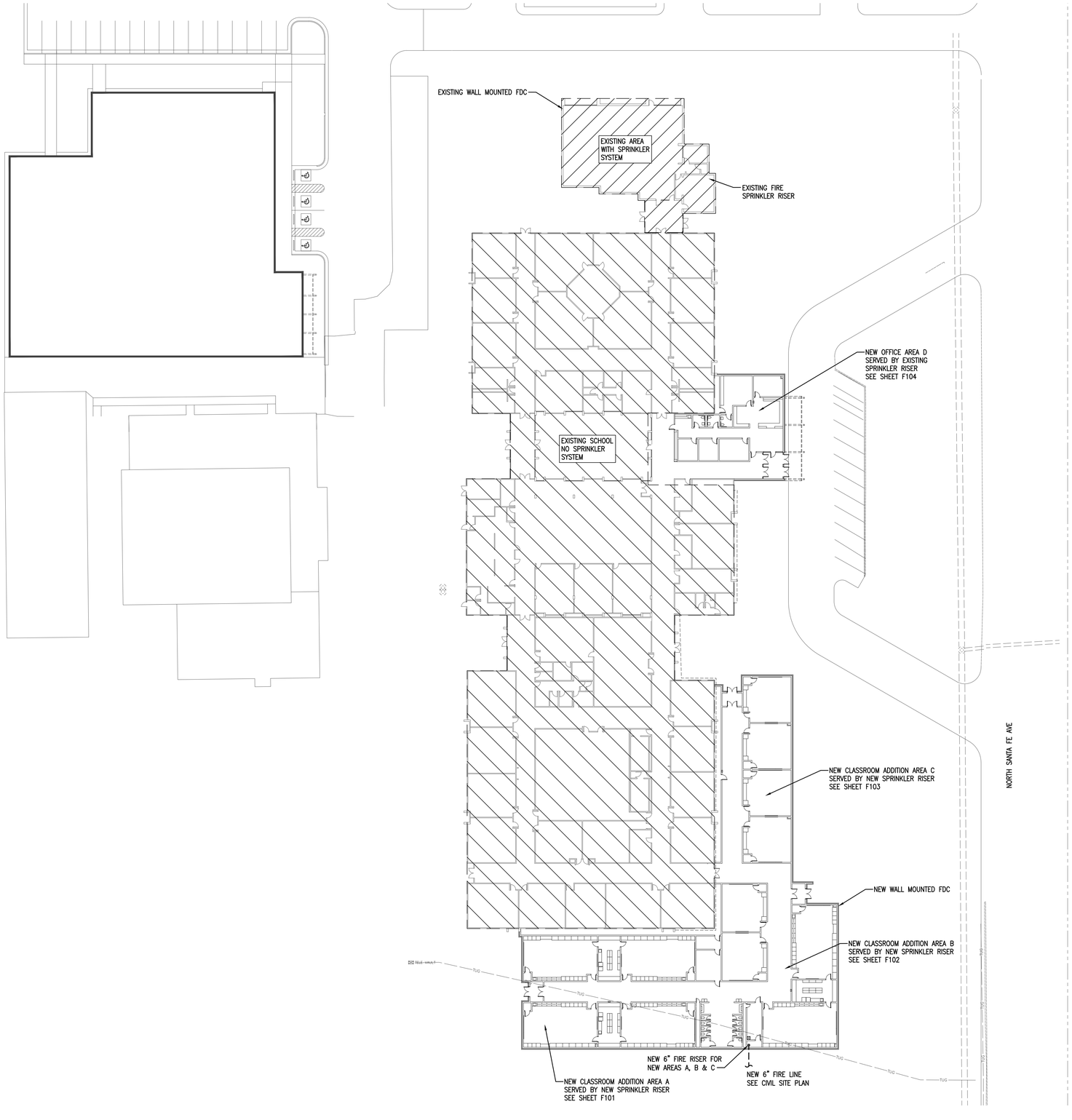

1 FIRE PROTECTION PLAN - SITE

SCALE: 1/32" = 1'-0"

NORTH

GENERAL NOTES

1. COORDINATE WORK WITH ALL OTHER TRADES ON SITE.
2. COORDINATE FIRE DEPARTMENT CONNECTION LOCATIONS WITH LOCAL FIRE DEPARTMENT OR AHJ.
3. FIELD VERIFY EXISTING CONDITIONS PRIOR TO COMMENCING WORK.

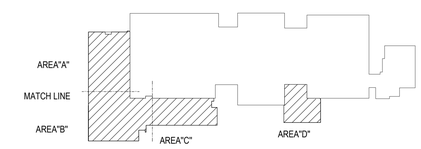

KEY PLAN

NORTH

AGP
the Abla Griffin Partnership L.L.C.

201 N. BROADWAY
SUITE 210
MOORE, OK. 73160
405.735.3477
AGP@theAGP.net
www.theAGP.net

CEDAR CREEK
CIVIL

KFC ENGINEERING
STRUCTURAL

SALAS O'BRIEN
MECHANICAL / ELECTRICAL

LICENSED PROFESSIONAL ENGINEER
Dwayne McDonald
Oklahoma
30822
08/18/23

KC
drawn by

KP
checked by

JULY 2023
date

revisions

MOORE PUBLIC SCHOOLS
BOARD OF EDUCATION
MOORE, OKLAHOMA

MOORE Public Schools
LEARNING FOR LIFE

CLASSROOM ADDITION
HIGHLAND WEST
JUNIOR HIGH SCHOOL

sheet no:

F001

Salas O'Brien
2600 Van Buren St., Suite 2635
Norman, OK 73072
Salas O'Brien Registration: CA# 7058
Expiration Date : 6/30/2025
Salas O'Brien Project Number: 2023-02792-00

OWNERSHIP USE OF DOCUMENTS:

AGP EXPRESSLY RESERVES ITS COPYRIGHT AND OTHER PROPERTY RIGHTS OF ALL PLANS AND DRAWINGS DESIGNED AND/OR PRODUCED. PLANS AND DRAWINGS ARE NOT TO BE REPRODUCED IN ANY FORM OR MANNER WITHOUT THE EXPRESSED WRITTEN CONSENT OF AGP.

GENERAL NOTES

1. COORDINATE WORK WITH ALL OTHER TRADES ON SITE.
2. FIELD VERIFY EXISTING CONDITIONS PRIOR TO COMMENCING WORK.
3. FIRE SEAL ALL PENETRATIONS THRU RATED STRUCTURES TO MAINTAIN FIRE RATING.
4. REFER TO NOTES ON SHEET F000.
5. COORDINATE INSPECTORS TEST DRAIN LOCATION WITH ALL TRADES ON SITE.

KEYED NOTES

(1) LIGHT HAZARD NEW ADDITION AREA. REFER TO ARCHITECTURAL PLANS FOR CEILING TYPE.

(2) ORDINARY HAZARD GROUP 1 – REFER TO ARCHITECTURAL PLANS FOR CEILING TYPE.

(3) LIGHT HAZARD – IT ROOM – PROVIDE INTERMEDIATE TEMPERATURE TYPE HEADS. COORDINATE HEAD LOCATION WITH IT DEPARTMENT.

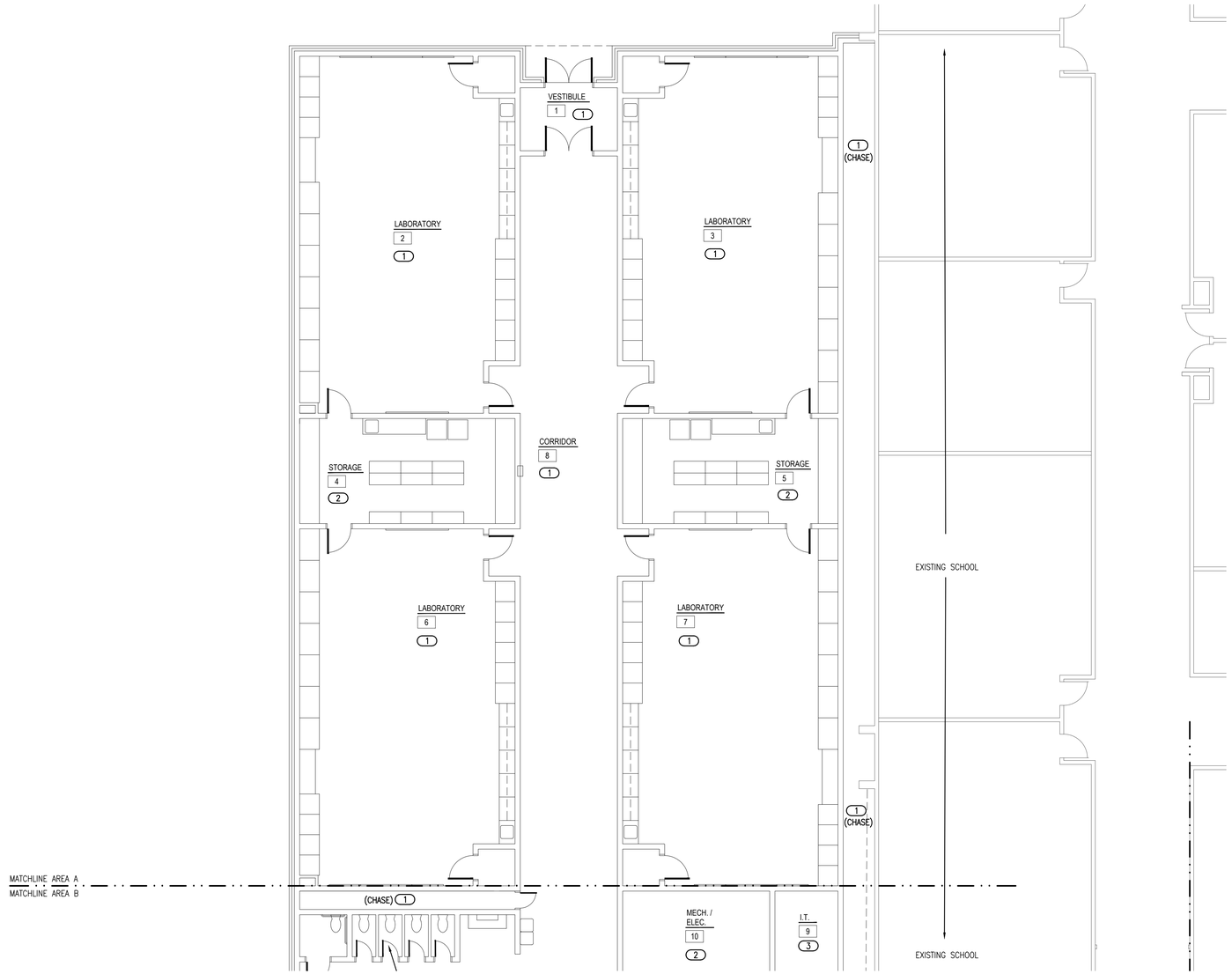

1 FIRE PROTECTION PLAN - AREA A
SCALE: 1/8" = 1'-0"

NORTH

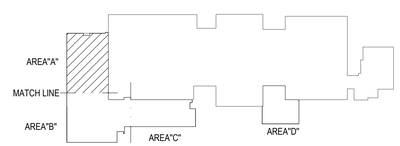

KEY PLAN

NORTH

AGP
the Abla Griffin Partnership L.L.C.

201 N. BROADWAY
SUITE 210
MOORE, OK. 73160
405.735.3477
AGP@theAGP.net
www.theAGP.net

CEDAR CREEK
CIVIL

KFC ENGINEERING
STRUCTURAL

SALAS O'BRIEN
MECHANICAL / ELECTRICAL

STATE OF OKLAHOMA REGISTERED PROFESSIONAL ENGINEER
Kirsten Pauley
M. Pauley
24308
08/18/23

KP
drawn by

KP
checked by

JULY 2023
date

revisions

MOORE PUBLIC SCHOOLS
BOARD OF EDUCATION
MOORE, OKLAHOMA

MOORE Public Schools
LEARNING FOR LIFE

CLASSROOM ADDITION
HIGHLAND WEST
JUNIOR HIGH SCHOOL

sheet no:

F101

Salas O'Brien
2600 Van Buren St., Suite 2635
Norman, OK 73072
Salas O'Brien Registration: CA# 7058
Expiration Date : 6/30/2025
Salas O'Brien Project Number: 2023-02792-00

OWNERSHIP USE OF DOCUMENTS:

AGP EXPRESSLY RESERVES ITS COPYRIGHT AND OTHER PROPERTY RIGHTS OF ALL PLANS AND DRAWINGS DESIGNED AND/OR PRODUCED. PLANS AND DRAWINGS ARE NOT TO BE REPRODUCED IN ANY FORM OR MANNER WITHOUT THE EXPRESSED WRITTEN CONSENT OF AGP.

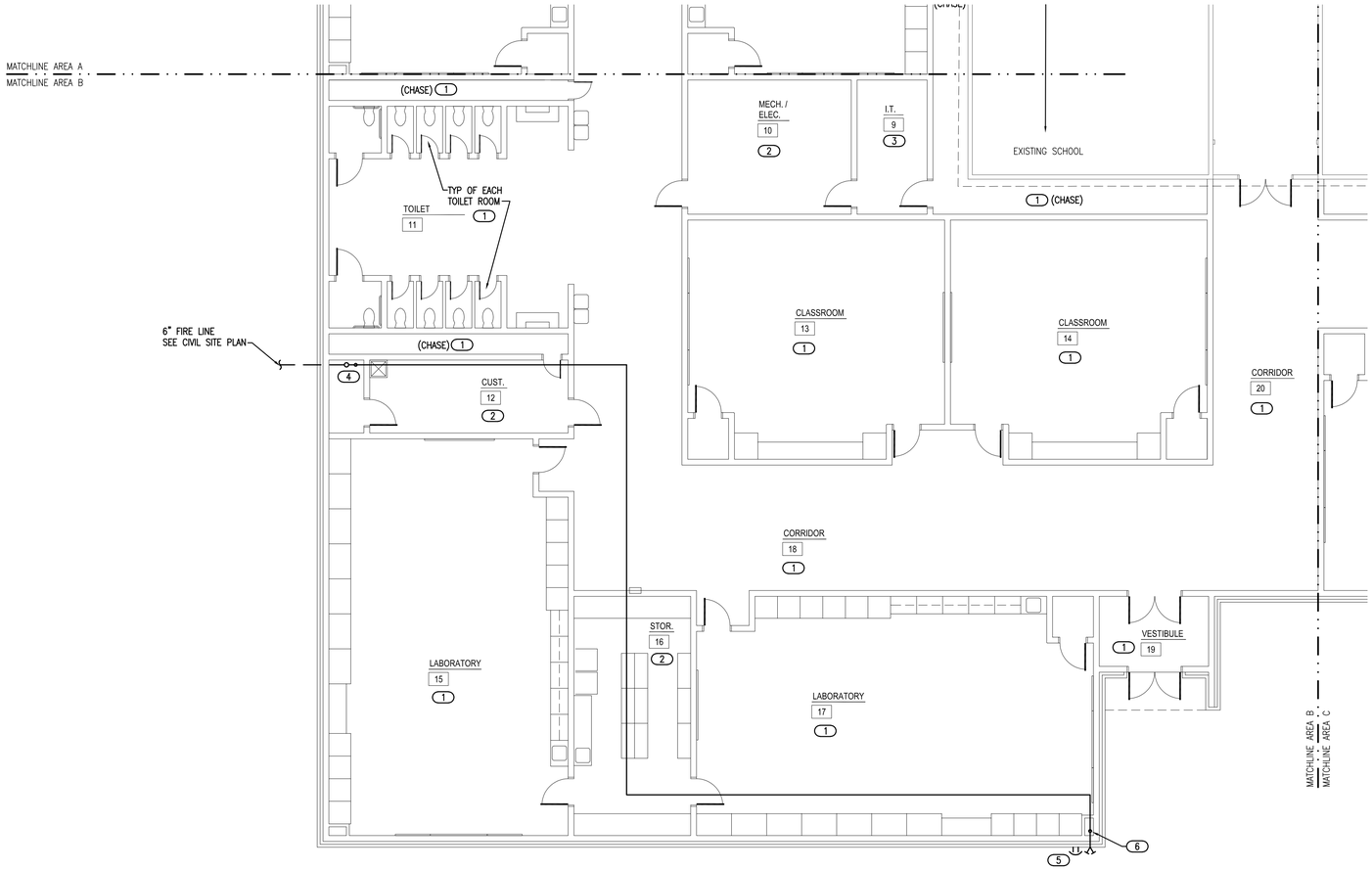

1 FIRE PROTECTION PLAN - AREA B

SCALE: 1/8" = 1'-0"

NORTH

GENERAL NOTES

1. COORDINATE WORK WITH ALL OTHER TRADES ON SITE.
2. FIELD VERIFY EXISTING CONDITIONS PRIOR TO COMMENCING WORK.
3. FIRE SEAL ALL PENETRATIONS THRU RATED STRUCTURES TO MAINTAIN FIRE RATING.
4. REFER TO NOTES ON SHEET F000.
5. COORDINATE INSPECTORS TEST DRAIN LOCATION WITH ALL TRADES ON SITE.

KEYED NOTES

1. LIGHT HAZARD NEW ADDITION AREA. REFER TO ARCHITECTURAL PLANS FOR CEILING TYPE.
2. ORDINARY HAZARD GROUP 1 – REFER TO ARCHITECTURAL PLANS FOR CEILING TYPE.
3. LIGHT HAZARD – IT ROOM – PROVIDE INTERMEDIATE TEMPERATURE TYPE HEADS. COORDINATE HEAD LOCATION WITH IT DEPARTMENT.
4. NEW FIRE SPRINKLER RISER SEE DETAIL 1/F000. COORDINATE FIRE LINE INSTALLATION WITH PC OR SITE CONTRACTOR. FIELD VERIFY LOCATION.
5. WALL MOUNTED SPRINKLER SYSTEM ALARM/STROBE. COORDINATE LOCATION WITH FIRE MARSHAL AND ALL OTHER TRADES.
6. ROUTE 4" FIRE LINE TO WALL MOUNTED FDC. COORDINATE WITH GC FOR PIPE CHASE FOR FIRE LINE INSTALLATION. COORDINATE FDC LOCATION WITH FIRE MARSHAL.

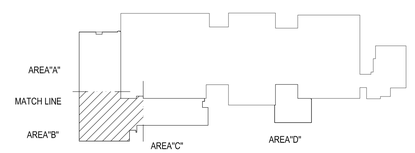

KEY PLAN

NORTH

AGP
the Abla Griffin Partnership L.L.C.

201 N. BROADWAY
SUITE 210
MOORE, OK. 73160
405.735.3477
AGP@theAGP.net
www.theAGP.net

CEDAR CREEK
CIVIL

KFC ENGINEERING
STRUCTURAL

SALAS O'BRIEN
MECHANICAL / ELECTRICAL

KP
drawn by

KP
checked by

JULY 2023
date

revisions

MOORE PUBLIC SCHOOLS
BOARD OF EDUCATION
MOORE, OKLAHOMA

MOORE Public Schools
LEARNING FOR LIFE

CLASSROOM ADDITION
HIGHLAND WEST
JUNIOR HIGH SCHOOL

sheet no:

F102

Salas O'Brien
2600 Van Buren St., Suite 2635
Norman, OK 73072
Salas O'Brien Registration: CA# 7058
Expiration Date : 6/30/2025
Salas O'Brien Project Number: 2023-02792-00

OWNERSHIP USE OF DOCUMENTS:

AGP EXPRESSLY RESERVES ITS COPYRIGHT AND OTHER PROPERTY RIGHTS OF ALL PLANS AND DRAWINGS DESIGNED AND/OR PRODUCED. PLANS AND DRAWINGS ARE NOT TO BE REPRODUCED IN ANY FORM OR MANNER WITHOUT THE EXPRESSED WRITTEN CONSENT OF AGP.

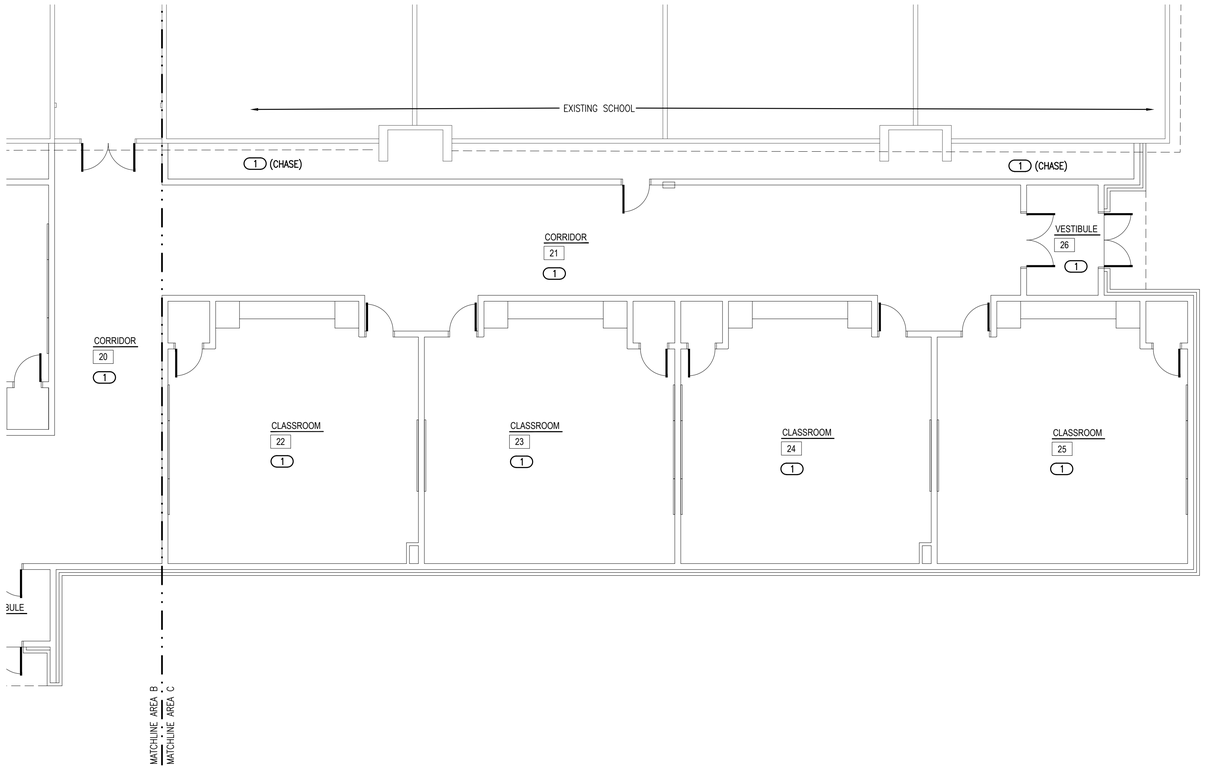

1 FIRE PROTECTION PLAN - AREA C

SCALE: 1/8" = 1'-0"

NORTH

GENERAL NOTES

1. COORDINATE WORK WITH ALL OTHER TRADES ON SITE.
2. FIELD VERIFY EXISTING CONDITIONS PRIOR TO COMMENCING WORK.
3. FIRE SEAL ALL PENETRATIONS THRU RATED STRUCTURES TO MAINTAIN FIRE RATING.
4. REFER TO NOTES ON SHEET F000.
5. COORDINATE INSPECTORS TEST DRAIN LOCATION WITH ALL TRADES ON SITE.

KEYED NOTES

(1) LIGHT HAZARD NEW ADDITION AREA. REFER TO ARCHITECTURAL PLANS FOR CEILING TYPE.

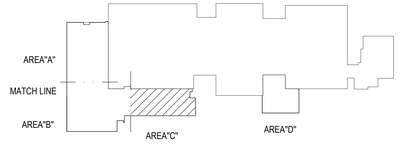

KEY PLAN

NORTH

AGP
the Abla Griffin Partnership L.L.C.
201 N. BROADWAY
SUITE 210
MOORE, OK. 73160
405.735.3477
AGP@theAGP.net
www.theAGP.net

CEDAR CREEK
CIVIL

KFC ENGINEERING
STRUCTURAL

SALAS O'BRIEN
MECHANICAL / ELECTRICAL

KP
drawn by

KP
checked by

JULY 2023
date

revisions

MOORE PUBLIC SCHOOLS
BOARD OF EDUCATION
MOORE, OKLAHOMA

MOORE Public Schools
LEARNING FOR LIFE

CLASSROOM ADDITION
HIGHLAND WEST
JUNIOR HIGH SCHOOL

sheet no:

F103

Salas O'Brien
2600 Van Buren St., Suite 2635
Norman, OK 73072
Salas O'Brien Registration: CA# 7058
Expiration Date : 6/30/2025
Salas O'Brien Project Number: 2023-02792-00

OWNERSHIP USE OF DOCUMENTS:

AGP EXPRESSLY RESERVES ITS COPYRIGHT AND OTHER PROPERTY RIGHTS OF ALL PLANS AND DRAWINGS DESIGNED AND/OR PRODUCED. PLANS AND DRAWINGS ARE NOT TO BE REPRODUCED IN ANY FORM OR MANNER WITHOUT THE EXPRESSED WRITTEN CONSENT OF AGP.

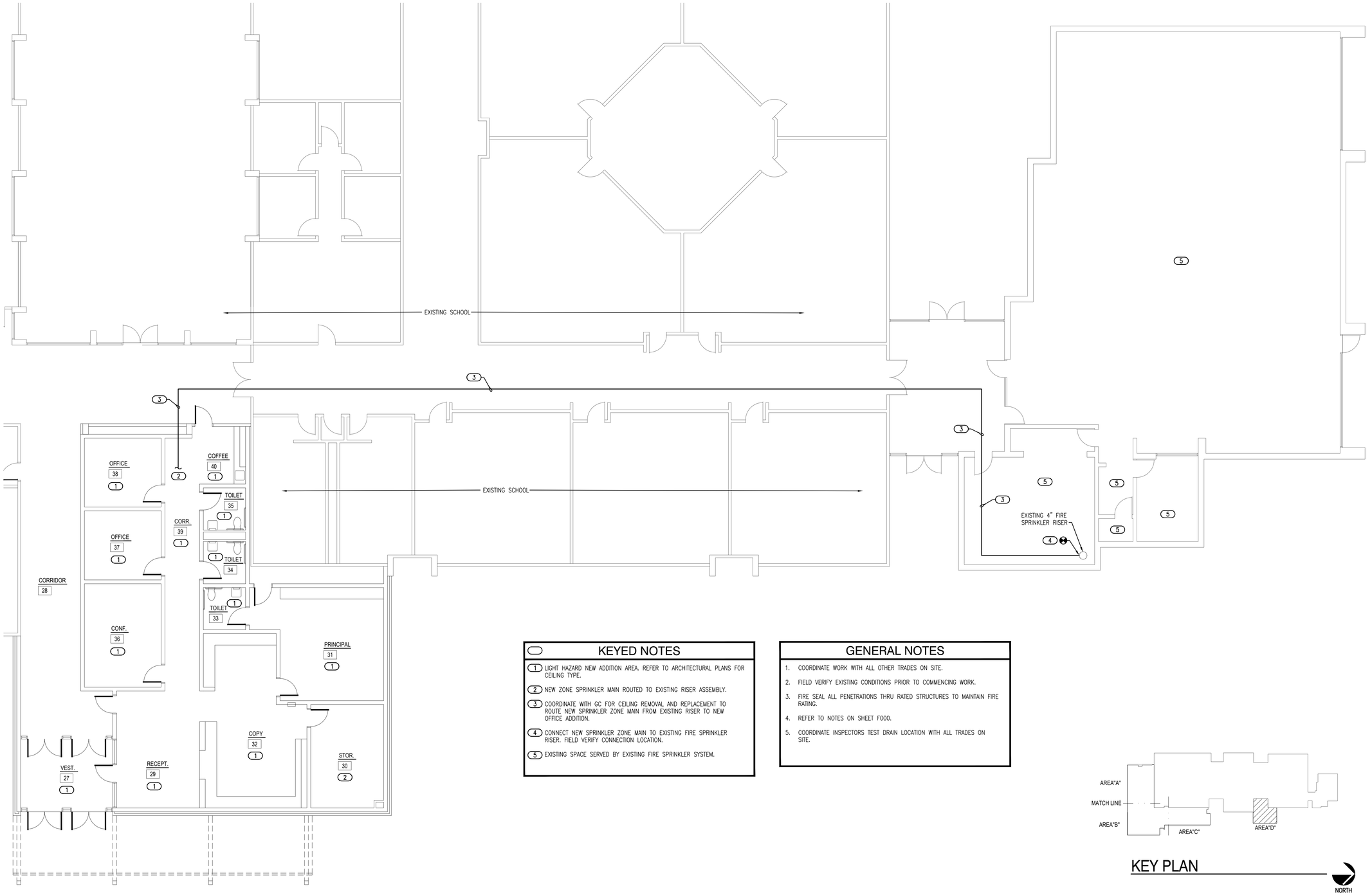

KEYED NOTES

1. LIGHT HAZARD NEW ADDITION AREA. REFER TO ARCHITECTURAL PLANS FOR CEILING TYPE.
2. NEW ZONE SPRINKLER MAIN ROUTED TO EXISTING RISER ASSEMBLY.
3. COORDINATE WITH GC FOR CEILING REMOVAL AND REPLACEMENT TO ROUTE NEW SPRINKLER ZONE MAIN FROM EXISTING RISER TO NEW OFFICE ADDITION.
4. CONNECT NEW SPRINKLER ZONE MAIN TO EXISTING FIRE SPRINKLER RISER. FIELD VERIFY CONNECTION LOCATION.
5. EXISTING SPACE SERVED BY EXISTING FIRE SPRINKLER SYSTEM.

GENERAL NOTES

1. COORDINATE WORK WITH ALL OTHER TRADES ON SITE.
2. FIELD VERIFY EXISTING CONDITIONS PRIOR TO COMMENCING WORK.
3. FIRE SEAL ALL PENETRATIONS THRU RATED STRUCTURES TO MAINTAIN FIRE RATING.
4. REFER TO NOTES ON SHEET F000.
5. COORDINATE INSPECTORS TEST DRAIN LOCATION WITH ALL TRADES ON SITE.

KEY PLAN

NORTH

1 FIRE PROTECTION PLAN - AREA D

SCALE: 1/8" = 1'-0"

NORTH

AGP
the Abla Griffin Partnership L.L.C.
201 N. BROADWAY
SUITE 210
MOORE, OK. 73160
405.735.3477
AGP@theAGP.net
www.theAGP.net

CEDAR CREEK
CIVIL

KFC ENGINEERING
STRUCTURAL

SALAS O'BRIEN
MECHANICAL / ELECTRICAL

KP
drawn by

KP
checked by

JULY 2023
date

revisions

MOORE PUBLIC SCHOOLS
BOARD OF EDUCATION
MOORE, OKLAHOMA

MOORE Public Schools
LEARNING FOR LIFE

CLASSROOM ADDITION
HIGHLAND WEST
JUNIOR HIGH SCHOOL

sheet no:

F104

Salas O'Brien
2600 Van Buren St., Suite 2635
Norman, OK 73072
Salas O'Brien Registration: CA# 7058
Expiration Date : 6/30/2025
Salas O'Brien Project Number: 2023-02792-00

OWNERSHIP USE OF DOCUMENTS:

AGP EXPRESSLY RESERVES ITS COPYRIGHT AND OTHER PROPERTY RIGHTS OF ALL PLANS AND DRAWINGS DESIGNED AND/OR PRODUCED. PLANS AND DRAWINGS ARE NOT TO BE REPRODUCED IN ANY FORM OR MANNER WITHOUT THE EXPRESSED WRITTEN CONSENT OF AGP.

ABBREVIATIONS

@	AT	HDWD.	HARDWOOD
ABV	ABOVE	HDWR.	HARDWARE
ACOUST.	ACOUSTICAL	HORIZ.	HORIZONTAL
ADJ.	ADJUSTABLE	HT.	HEIGHT
ANCH.	ANCHOR	INSUL.	INSULATION
APPROX.	APPROXIMATE	JST.	JOIST
BD.	BOARD	JT.	JOINT
BLK'G.	BLOCKING	LAV.	LAVATORY
BM.	BEAM	MAT'L	MATERIAL
BOT.	BOTTOM	MAX.	MAXIMUM
Ç	CENTERLINE	MECH.	MECHANICAL
CL'G.	CEILING	MFG.	MANUFACTURING
CONC.	CONCRETE	MFR.	MANUFACTURER
CMU	CONCRETE MASONARY UNIT	MIN.	MINIMUM
COL.	COLUMN	MISC.	MISCELLANEOUS
CONT.	CONTINUOUS	MTL.	METAL
D.F.	DRINKING FOUNTAIN	N.I.C.	NOT IN CONTRACT
DIM.	DIMENSION	NO. / #	NUMBER
DR.	DOOR	N.T.S.	NOT TO SCALE
DWG.	DRAWING	O.C.	ON CENTER
DWL.	DOWEL	OPN'G.	OPENING
EA.	EACH	OPP.	OPPOSITE
ELECT.	ELECTRICAL	PP.	POWER POLE
ELEV.	ELEVATION	PREFIN.	PREFINISHED
EQ.	EQUAL	P.T.	PAPER TOWEL
E.J.	EXPANSION JOINT	PW / PLY. WD.	PLYWOOD
E.W.	EACH WAY	RE:	REFER
EXIST.	EXISTING	REQ'D.	REQUIRED
EXP.	EXPANSION	RM.	ROOM
EXT.	EXTERIOR	S.B.	SPLASH BLOCK
FD.	FLOOR DRAIN	SCHED.	SCHEDULE
FE.	FIRE EXTINGUISHER	STD.	STANDARD
FEC.	FIRE EXTINGUISHER CABINET	STL.	STEEL
FFL.	FINISH FLOOR LINE	S.J.	SAWJOINT
FIN.	FINISH	T.C.	TOP OF CURB
FRM'G.	FRAMING	T.P.H.	TOILET PAPER HOLDER
GA.	GAUGE	TYP.	TYPICAL
G.B.	GRAB BAR	U.N.O.	UNLESS NOTED OTHERWISE
GALV.	GALVANIZED	VTR.	VENT THROUGH ROOF
GYP. BD.	GYPSUM BOARD	W/	WITH
H.C.	HANDICAP	W.C.	WATERCLOSET
		WD.	WOOD
		WWF.	WELDED WIRE FABRIC

MATERIALS LEGEND

FOR PLANS AND DETAILS

- MASONRY VENEER
- C.M.U.
- CONCRETE
- FRAME PARTITION, METAL STUDS

FOR DETAILS

- GYPSUM BOARD
- PARTICLE BOARD
- RIGID INSULATION
- WOOD BLOCKING / FRAMING, CONTINUOUS
- WOOD BLOCKING, DISCONTINUOUS
- FINISH WOOD
- SMALL SCALE STRUCTURAL STEEL / MISCELLANEOUS METAL
- LARGE SCALE STRUCTURAL STEEL
- BATT INSULATION
- ACOUSTICAL CEILING TILE
- EARTH FILL

SYMBOLS LEGEND

- 1152 — EXISTING SPOT ELEVATION
- 1152 — FINISH SPOT ELEVATION
- 1152 — EXISTING GRADE CONTOUR
- 1152 — FINISH GRADE CONTOUR
- 18" ELM — EXISTING TREE TO BE PROTECTED
- 15" OAK — EXISTING TREE TO BE REMOVED
- PROJECT LIMITS
- CHAINLINK FENCE
- BARBED WIRE FENCE
- CONCRETE PAVING
- ASPHALT PAVING
- CONCRETE SIDEWALK
- EXISTING PAVING/SIDEWALK TO REMAIN
- EXISTING PAVING TO BE REMOVED
- NEW BUILDING
- EXISTING BUILDING - NO WORK
- 3 — ROOM NUMBER
- 3 RE: 4A7 — ROOM NUMBER/ LARGE SCALE PLAN REFERENCE
- 3 2A6 — ROOM NUMBER/INTERIOR ELEVATION REFERENCE

- 2A7 — WALL SECTION/DETAIL CUT MARK
- 5A7 — LARGE SCALE DETAIL MARK
- A / 1 — STRUCTURAL GRID COORDINATES
- 1A4 — BUILDING SECTION CUT MARK
- 6 — DOOR NUMBER
- C — WINDOW MARK
- B — FRAME MARK
- G2 — GLAZING MATERIAL MARK
- 4 — EQUIPMENT MARK
- *A18 — EXTERIOR ELEVATION MARK
- #4 — TEST HOLE
- ELEV. 1152 — BENCH MARK/BUILDING ELEVATION (SECTION)

GENERAL NOTES:

1. ALL REQUIRED HANDICAP ACCESSIBLE ITEMS TO COMPLY WITH AMERICANS WITH DISABILITIES ACT AND ARCHITECTURAL BARRIERS ACT ACCESSIBILITY GUIDELINES.
2. THE CONTRACTOR SHALL NOT USE ANY LEAD-BASED PAINT OR ASBESTOS CONTAINING MATERIAL ON THIS PROJECT
3. THESE CONTRACT DOCUMENTS INCLUDING BUT NOT LIMITED TO THE DRAWINGS, PROJECT MANUAL AND ANY SUBSEQUENT ADDENDA ARE ISSUED AS A "WHOLE" AND SHALL BE BID AS SUCH. EACH DISCIPLINE / SUBCONTRACTOR SHALL REVIEW THE ENTIRE SET OF CONTRACT DOCUMENTS AND INCLUDE APPLICABLE WORK IN THEIR BID REGARDLESS OF LOCATION WITHIN THE CONTRACT DOCUMENTS. REVIEWING ONLY PORTION OF THE CONTRACT DOCUMENTS SHALL NOT ABSOLVE THE CONTRACTOR OR SUBCONTRACTOR OF THE REQUIREMENT TO PERFORM THE WORK OF THEIR RESPECTIVE DISCIPLINES.
4. LOCATIONS OF EXISTING BUILDINGS, SITE FEATURES, & UNDERGROUND UTILTIES HAVE BEEN OBTAINED FROM EXISTING AVAILABLE SOURCES. THE CONTRACTOR IS TO FIELD VERIFY EXISTING LOCATIONS PRIOR TO STARTING CONSTRUCTION AND NOTIFY THE ARCHITECT IMMEDIATELY IF ANY EXISTING BUILDING &/OR SITE FEATURE CONFLICTS W/ THE NEW CONSTRUCTION.
5. THE CONTRACTOR SHALL VERIFY ALL EXISTING SITE UTILITIES AND PROTECT DURING CONSTRUCTION. COORDINATE NEW UTILITY REQUIREMENTS WITH APPLICABLE UTILITY COMPANIES (WATER, GAS ELECTRICITY, SANITARY SEWER, TELEPHONE, CABLE, SITE DRAINAGE AND OTHERS AS REQUIRED). COMPLY WITH ALL APPLICABLE REGULATIONS. INCLUDE ALL CONNECTION FEES AND OTHER CHARGES IN BID.
6. REFER TO MECHANICAL AND ELECTRICAL DRAWINGS FOR UTILITY INFORMATION.
7. REFER TO MECHANICAL AND ELECTRICAL DRAWINGS FOR ADDITIONAL REQUIREMENTS AND CONCRETE TO BE PROVIDED BY CONTRACTOR.
8. GENERAL CONTRACTOR TO VERITY LOCATIONS OF EASEMENTS, ENCUMBRANCES AND SET BACKS PRIOR TO STARTING CONSTRUCTION
9. CONFLICTS BETWEEN DRAWINGS AND SPECIFICATIONS SHALL BE BROUGHT TO ARCHITECT'S ATTENTION. FAILURE TO BID ITEM(S) NOTED ON DRAWINGS AND OMITTED FROM SPECIFICATIONS DOES NOT REMOVE RESPONSIBILITY TO PROVIDE AND INSTALL SUCH.

AGP
the Abla Griffin Partnership L.L.C.
201 N. BROADWAY
SUITE 210
MOORE, OK. 73160
405.735.3477
AGP@theAGP.net
www.theAGP.net

CEDAR CREEK
CIVIL

KFC ENGINEERING
STRUCTURAL

SALAS O'BRIEN
MECHANICAL / ELECTRICAL

STATE OF OKLAHOMA
MICHAEL L. ABLA
2639
REGISTERED ARCHITECT

7/31/23

PROJECT LOCATION

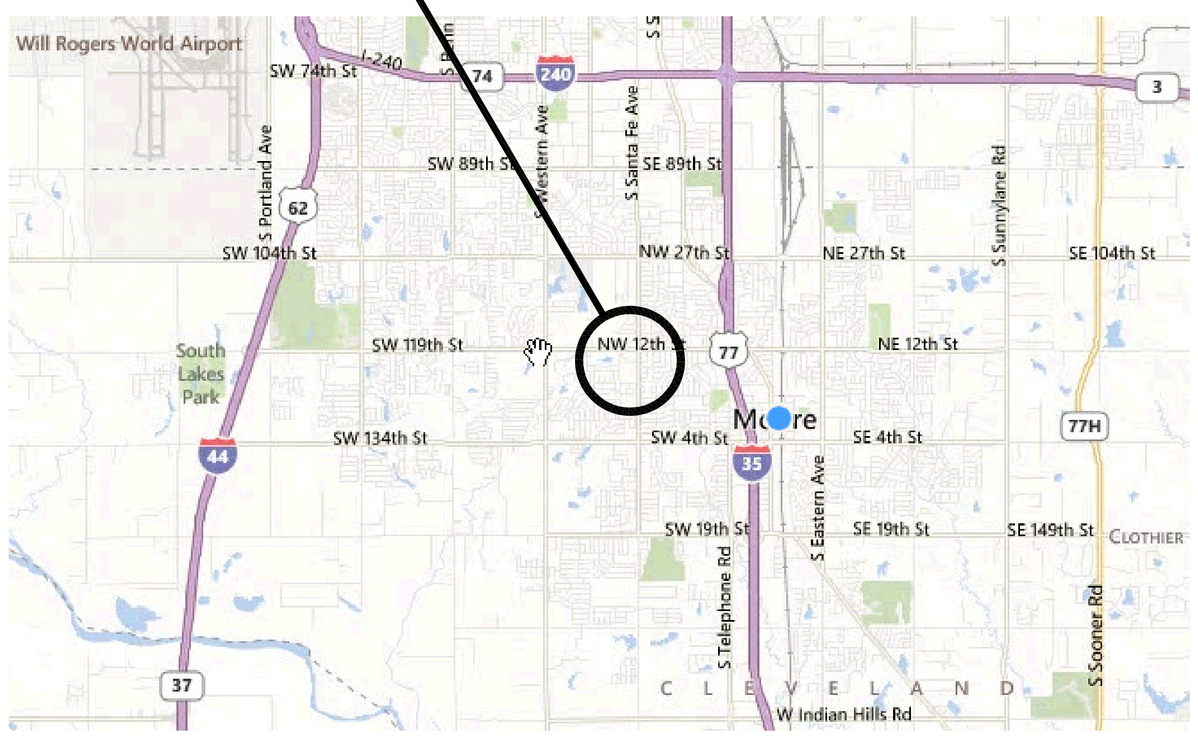

HIGHLAND WEST JUNIOR HIGH SCHOOL
901 N. SANTA FE
MOORE, OKLAHOMA 73160

NORTH

VICINITY MAP

GENERAL NOTES (CON'T):

10. CONSTRUCTION STAGING AREA & VEHICLE ACCESS SHALL BE CONFIRMED WITH OWNER, AND CONSTRUCTION MANAGER IF APPLICABLE, PRIOR TO CONSTRUCTION.
11. FINISH GRADE AT BUILDING PERIMETERS SHALL BE 6" BELOW FINISH FLOOR UNLESS SPECIFICALLY NOTED OTHERWISE ON CIVIL DRAWINGS. DEVELOP POSITIVE DRAINAGE AWAY FROM NEW AND/OR EXISTING BUILDING(S).
12. ALL GRID LINES IDENTIFIED BY A LETTER OR NUMBER ARE PARALLEL UNLESS OTHERWISE NOTED.
13. SIZES OF HOUSEKEEPING PADS AND BASES FOR MECHANICAL EQUIPMENT ARE APPROXIMATE. CONTRACTOR SHALL VERIFY EXACT LOCATION AND REQUIRED SIZE OF ALL CONCRETE PADS AND BASES WITH EQUIPMENT MANUFACTURERS BEFORE POURING. ALL PADS TO BE PROVIDED BY THE CONTRACTOR.
14. CONTRACTOR SHALL COORDINATE THE INSTALLATION OF THE VARIOUS TRADE ITEMS WITHIN THE SPACE ABOVE THE CEILINGS (INCLUDING, BUT NOT LIMITED TO STRUCTURAL MEMBERS AND SPRAY-ON INSULATION OR FIREPROOFING, MECHANICAL DUCTS AND BATT INSULATION, CONDUITS, RACEWAY, SPRINKLER SYSTEMS, LIGHT FIXTURES, CEILING SYSTEMS, AND ANY SPECIAL STRUCTURAL SUPPORTS REQUIRED) AND SHALL BE RESPONSIBLE FOR MAINTAINING THE FINISH CEILING HEIGHT ABOVE THE FINISH FLOOR INDICATED IN THE DRAWINGS AND FINISH SCHEDULE.
15. ALL METAL STUDS WALLS WHERE PLUMBING OCCURS OR STRUCTURAL COLUMNS ARE LOCATED SHALL BE MINIMUM 6" METAL STUDS. NOTIFY ARCHITECT OF ANY DISCREPANCIES OR CONFLICTS.
16. PROVIDE AND INSTALL ACCESS PANELS, WHERE REQUIRED BY BUILDING CODE OR FOR THE PROPER OPERATION OF MECHANICAL OR ELECTRICAL EQUIPMENT, AND AS SHOWN ON THE DRAWINGS. CONTRACTOR SHALL COORDINATE SIZE, LOCATION, AND TYPE OF ACCESS PANEL WITH OTHER CONTRACTORS' WORK AND RECEIVE APPROVAL OF THE ARCHITECT. ACCESS PANEL SHALL BE AS SPECIFIED.
17. 3/4" FIRE-RETARDANT TREATED PLYWOOD BACKING 8'-0" HIGH SHALL BE PROVIDED AND INSTALLED ON ALL WALLS OF TELEPHONE AND ELECTRICAL ROOMS UNLESS SPECIFICALLY SHOWN OTHERWISE ON ELECTRICAL DRAWINGS.
18. ALL WOOD WITHIN THIS PROJECT (I.E. PLYWOOD, BLOCKING, ETC.) SHALL BE FIRE-RETARDANT TREATED.
19. FOR ILLUSTRATION AND DEFINITION OF TYPICAL SYMBOLS USED ON THE ARCHITECTURAL DRAWINGS, SEE "SYMBOLS AND ABBREVIATIONS" SHEET. ADDITIONAL SYMBOLS NOT SHOWN OR DEFINED THERE MAY OCCUR AND ARE DEFINED ON OTHER DRAWINGS.
20. REFER TO SPECIFICATIONS FOR ADDITIONAL PAINT ITEMS NOT SHOWN ON ROOM FINISH SCHEDULE.
21. THE SPECIFICATIONS AND ALL CONSULTANT DRAWINGS ARE SUPPLEMENTAL TO THE ARCHITECTURAL DRAWINGS. IT SHALL BE THE CONTRACTOR'S RESPONSIBILITY TO COORDINATE WITH THE ARCHITECTURAL DRAWINGS BEFORE THE INSTALLATION OF ANY OF THE CONSULTANTS' WORK AND TO BRING ANY DISCREPANCIES OR CONFLICTS TO THE ARCHITECT'S ATTENTION FOR CLARIFICATION. IMPROPERLY INSTALLED WORK SHALL BE CORRECTED BY THE CONTRACTOR AT NO EXPENSE TO THE ARCHITECT, HIS CONSULTANTS, OR THE OWNER.
22. THE ARCHITECTURAL DRAWINGS ARE A PART OF A LARGER SET OF DRAWINGS WHICH, WHEN COMPLETE, CONSISTS OF ALL DRAWINGS LISTED BY THE INDEX OF DRAWINGS. THE WORK DESCRIBED BY THE DRAWINGS OF ANY ONE DISCIPLINE MAY BE AFFECTED BY THE WORK DESCRIBED ON DRAWINGS OF ANOTHER DISCIPLINE AND MAY REQUIRE REFERENCE TO DRAWINGS OF ANOTHER DISCIPLINE. PARTIAL SETS OF DRAWINGS SHALL NOT BE DISTRIBUTED AND UTILIZED BY THE CONTRACTOR. IT IS THE CONTRACTOR'S RESPONSIBILITY TO REVIEW AND COORDINATE THE WORK OF ALL SUBCONTRACTORS, TRADES, AND SUPPLIERS WITH THE REQUIREMENTS OF THE CONTRACT BEFORE COMMENCING CONSTRUCTION AND TO ASSURE THAT ALL PARTIES ARE AWARE OF ALL REQUIREMENTS, REGARDLESS OF WHERE THE REQUIREMENTS OCCUR IN THE CONTRACT DOCUMENTS.
23. THE ARCHITECTURAL DRAWINGS ESTABLISH AND COORDINATE THE FINISHED APPEARANCE AND EXACT LOCATIONS OF ALL EXPOSED ELEMENTS OF THE WORK, INCLUDING THAT WORK WHICH IS ILLUSTRATED PRIMARILY ON DRAWINGS OF OTHER DISCIPLINES. LOCATIONS SHOWN ON OTHER DRAWINGS ARE SCHEMATIC, UNLESS OTHERWISE NOTED ON THE ARCHITECTURAL DRAWINGS. THE ARCHITECTURAL DRAWINGS TAKE PRECEDENCE FOR THE FINISHED APPEARANCE AND EXACT LOCATION OF ALL PARTS OF THE WORK. [EXCEPTIONS: DIMENSIONED LOCATIONS SHOWN ON DRAWINGS OF OTHER DISCIPLINES SHALL GOVERN ONLY WHERE: (A) SPECIFICALLY AND INDIVIDUALLY INDICATED BY SYMBOL, KEYED NOTE, OR NOTATION ON THE ARCHITECTURAL DRAWINGS. (B) OCCURRING WITHIN A ROOM OR OTHER IDENTIFIED SPACE FOR WHICH ARCHITECTURAL SHEET OR SCHEDULE NOTES INDICATE THAT DIMENSIONS PROVIDED ELSEWHERE SHALL GOVERN.]
24. WORK NOT SPECIFICALLY INDICATED ON A PART OF THE DRAWINGS BUT REASONABLY IMPLIED TO BE SIMILAR TO WORK SHOWN ON THE DRAWINGS IN CORRESPONDING AND OTHER PLACES SHALL BE CONSTRUCTED SIMILARLY.
25. PROVIDE FIRE EXTINGUISHERS WITH A RATING OF NOT LESS THAN 2A WITHIN 75 FOOT TRAVEL DISTANCE TO ALL PORTIONS OF THE BUILDING. PROVIDE PORTABLE FIRE EXTINGUISHERS AS THE BUILDING IS CONSTRUCTED.

CG
drawn by

MA
checked by

JULY 2023
date

revisions

MOORE PUBLIC SCHOOLS
BOARD OF EDUCATION
MOORE, OKLAHOMA

MOORE Public Schools
LEARNING FOR LIFE

CLASSROOM ADDITION
HIGHLAND WEST
JUNIOR HIGH SCHOOL

sheet no:

G100

OWNERSHIP USE OF DOCUMENTS:

AGP EXPRESSLY RESERVES ITS COPYRIGHT AND OTHER PROPERTY RIGHTS OF ALL PLANS AND DRAWINGS DESIGNED AND/OR PRODUCED. PLANS AND DRAWINGS ARE NOT TO BE REPRODUCED IN ANY FORM OR MANNER WITHOUT THE EXPRESSED WRITTEN CONSENT OF AGP.

GENERAL MECHANICAL NOTES

1. ALL WORK SHALL BE IN COMPLIANCE WITH STATE AND LOCAL CODES.
2. THE CONTRACTOR SHALL PAY FOR ALL FEES, PERMITS, LICENSES, ETC., NECESSARY FOR PROPER COMPLETION OF THE WORK.
3. INSTALL ALL EQUIPMENT IN ACCORDANCE WITH MANUFACTURERS RECOMMENDATIONS.
4. VERIFY ALL EXISTING CONDITIONS. NOTIFY ENGINEER OF ANY CONFLICTS BETWEEN CONTRACT DRAWINGS AND ACTUAL CONDITIONS.
5. EXISTING UTILITIES TO BE ABANDONED SHALL BE PROPERLY DISCONNECTED AND CAPPED AS REQUIRED BY CODE OR LOCAL ORDINANCE.
6. THESE DRAWINGS ARE DIAGRAMMATIC AND SHALL NOT BE SCALED. ADDITIONAL DATA SHALL BE FROM THE ENGINEER THROUGH WRITTEN CLARIFICATION ONLY. VERIFY ALL EXISTING CONDITIONS, ELEVATIONS, AND DIMENSIONS BEFORE PROCEEDING WITH ANY PORTION OF ANY WORK. THE CONTRACTOR SHALL PROVIDE ALL OFFSETS AND TRANSITIONS REQUIRED TO MEET EXISTING CONDITIONS.
7. THE CONTRACTOR SHALL PERFORM WORK IN A SKILLED AND PROFESSIONAL MANNER.
8. ALL CONTRACTORS ARE RESPONSIBLE TO FIELD COORDINATE WORK SCHEDULE WITH OWNER REPRESENTATIVE.
9. THE CONTRACTOR SHALL WORK AND COORDINATE WITH THE OTHER TRADES.
10. ALL EQUIPMENT SHALL BE NEW AND IN UNDAMAGED CONDITION. ANY EQUIPMENT FOUND DEFECTIVE SHALL BE IMMEDIATELY REMOVED FROM THE PROJECT.
11. PROVIDE 3 COPIES OF AN OPERATION AND MAINTENANCE MANUAL FOR ALL MAJOR EQUIPMENT REQUIRING SERVICE. MAJOR EQUIPMENT INCLUDES BUT IS NOT LIMITED TO COILS, FANS, AND CONTROL WIRING DIAGRAMS. EACH PIECE OF EQUIPMENT SHALL STATE THE CONTRACT DATE AND THE NAME, ADDRESS AND PHONE NUMBER FOR THE PRIME CONTRACTOR, SUBCONTRACTOR PERFORMING THE INSTALLATION, AND THE LOCAL VENDOR FOR SPARE PARTS. THE MANUALS SHALL CONTAIN MAINTENANCE INSTRUCTIONS REQUIRED FOR THE INSTALLED EQUIPMENT. MANUALS SHALL BE BOUND IN A THREE RING HARD COVER BINDER. O & M MANUALS SHALL BE SUBMITTED TO THE OWNER PRIOR TO FINAL WALK THROUGH OF THE PROJECT.
12. PROVIDE 8 HOURS OF OWNER TRAINING FOR THE INSTALLED EQUIPMENT. TRAINING SHALL BE HELD ONLY AFTER ALL OF THE EQUIPMENT IS INSTALLED AND PROPER OPERATION IS VERIFIED.
13. CONTRACTOR SHALL SUBMIT A CERTIFIED REPORT INDICATING SYSTEM PERFORMANCE INCLUDING, BUT NOT LIMITED TO, VOLTAGE AND AMPERAGE MEASUREMENTS OF ALL EQUIPMENT GREATER THAN 1/3 H.P. AIR BALANCE MEASUREMENTS OF OUTSIDE AIR DELIVERY, AIR HANDLING UNIT SUPPLY, SUPPLY DIFFUSERS, EXHAUST AND RETURN GRILLES. AIR BALANCE SHALL BE WITHIN 10% OF DESIGN CONDITIONS. THE REPORT CERTIFICATION SHALL BE AS FOLLOWS:

    I (name) of (company) CERTIFY THAT ALL MEASUREMENTS, FIGURES AND STATEMENTS INDICATED IN THIS REPORT WERE TAKEN BY ME OR UNDER MY SUPERVISION AND ARE ACCURATE AS OF (date). DESIGN FLOWS WERE BASED UPON PLANS DATED (xx/xx/xx).

14. DUCT MATERIAL SHALL BE GALVANIZED OR ALUMINUM CONSTRUCTION IN ACCORDANCE WITH SMACNA DUCT CONSTRUCTION STANDARD 2005 FOR THE PRESSURE AND SEAL CLASS LISTED IN DUCTWORK/INSULATION SCHEDULE.
15. DUCT SIZES LISTED ON PLANS ARE THE REQUIRED CLEAR INTERIOR DIMENSIONS.
16. SUPPLY AND RETURN BRANCH DUCTS MAY BE INSULATED FLEX DUCT IF THE RUN IS LESS THAN 5 FEET IN LENGTH. ANY LENGTHS OVER 5 FEET SHALL BE RIGID DUCTWORK, DUCT SHALL BE THE SAME SIZE AS THE LISTED DIFFUSER THROAT UNLESS NOTED OTHERWISE.
17. PROVIDE VOLUME CONTROL DAMPERS WHERE INDICATED AND AT ALL TAKEOFFS, BOTH SUPPLY AND RETURN SYSTEMS, AND MAJOR DUCT RUNS. DAMPERS SHALL BE FACTORY-FABRICATED WITH ZINC-PLATED, DIE-CAST CONTROL HARDWARE. CONTROL HARDWARE SHALL INCLUDE HEAVY GAUGE DIAL AND HANDLE WITH ELEVATED PLATFORM FOR INSULATED DUCT MOUNTING.
18. PROVIDE TURNING VANES IN ALL RECTANGULAR ELBOWS CONFORMING TO SMACNA DUCT CONSTRUCTION STANDARD 2005 FIG. 4-2 TYPE RE-3 WITH STANDARD RADIUS. WHERE SPACE PERMITS, PROVIDE RADIUSED ELBOWS IN ACCORDANCE WITH FIGURES 4-2, TYPE RE-1.
19. ALL RECTANGULAR MAIN TO RECTANGULAR BRANCH CONNECTIONS, BOTH CONVERGING AND DIVERGING CONFIGURATIONS, SHALL HAVE A 45 DEG. ENTRY TAP CONSTRUCTED IN ACCORDANCE WITH SMACNA DUCT CONSTRUCTION STANDARD 2005 FIG. 4-6.
20. DIFFUSER PATTERN 4-WAY UNLESS OTHERWISE INDICATED. PROVIDE FIBERGLASS DUCT INSULATION WITH VAPOR BARRIER AS SCHEDULED UNLESS NOTED OTHERWISE.
21. MECHANICAL CONTRACTOR TO REPAIR ANY DAMAGE DONE TO THE FIRE PROOFING WHILE INSTALLING THE MECHANICAL TRADES. SEAL ALL PENETRATIONS THROUGH RATED STRUCTURES WITH UL LISTED FIRE SEAL DESIGNED FOR THE SPECIFIED APPLICATION.
22. THE CONTRACTOR SHALL TAKE ALL PRECAUTIONARY MEASURES TO PROTECT THE PUBLIC AND ADJACENT PROPERTIES FROM DAMAGE THROUGHOUT CONSTRUCTION.
23. THE CONTRACTOR SHALL GUARANTEE ALL WORKMANSHIP AND MATERIALS FOR A PERIOD OF ONE (1) YEAR FROM THE DATE OF SUBSTANTIAL COMPLETION OR AS OTHERWISE REQUIRED IN THE SPECIFICATIONS.
24. MECHANICAL CONTRACTOR TO INCLUDE THE TEST AND BALANCE, AND ANY PERMIT FEES IN THEIR BID.
25. MECHANICAL CONTRACTOR SHALL VERIFY ALL ROOFTOP EQUIPMENT WEIGHTS, SIZES, LOCATIONS AND OPENINGS REQUIRED AND SHALL COORDINATE ANY CHANGES WITH THE ARCHITECT.
26. UPON PROJECT COMPLETION, RECORD (AS-BUILT) DRAWINGS SHALL BE PROVIDED BY THE CONTRACTOR TO THE BUILDING OWNER. ALL CHANGES MADE TO EQUIPMENT, DUCTWORK, AND GENERAL DESIGN SHALL BE NOTED ON THE DRAWINGS. PROVIDE IN PDF FORMAT OR PRINTED SET AT THE OWNER'S REQUEST.

ABBREVIATIONS

A	AMP
ADD	ADDENDUM
ADJ	ADJUSTABLE
AFF	ABOVE FINISH FLOOR
AHU	AIR HANDLER UNIT
AI	ANALOG INPUT
ALT	ALTERNATE
AO	ANALOG OUTPUT
APPRX	APPROXIMATE
ARCH	ARCHITECT, ARCHITECTURAL
BDD	BACK DRAFT DAMPER
BLDG	BUILDING
BTUH	BRITISH THERMAL UNIT PER HOUR
C	CENTER
CD	CEILING DIFFUSER
CFM	CUBIC FEET PER MINUTE
CO	CLEAN OUT
COND	CONDENSATE
CONT	CONTINUOUS
COP	COEFFICIENT OF PERFORMANCE
DB	DRY BULB
DET	DETAIL
DG	DOOR GRILLE
DI	DIGITAL INPUT
DIA OR ø	DIAMETER
DIM	DIMENSION
DN	DOWN
DO	DIGITAL OUTPUT
DWG	DRAWING
EA	EXHAUST AIR
EAT	ENTERING AIR TEMPERATURE
EC	ELECTRICAL CONTRACTOR
EER	ENERGY EFFICIENCY RATIO
EF	EXHAUST FAN
EG	EXHAUST GRILLE
ELEC	ELECTRICAL
ERV	ENERGY RECOVERY VENTILATOR
ESP	EXTERNAL STATIC PRESSURE
EWT	ENTERING WATER TEMPERATURE
EXIST	EXISTING
FA	FRESH AIR
FPM	FEET PER MINUTE
FT	FOOT (FEET)
GA	GAUGE/GAGE
GALV	GALVANIZED
GC	GENERAL CONTRACTOR
GPM	GALLONS PER MINUTE
GYP	GYPSUM
HORIZ	HORIZONTAL
HP	HORSEPOWER
HT	HEIGHT
I/O	INPUT/OUTPUT
IN	INCH
LAT	LEAVING AIR TEMPERATURE
LB	POUND
LWT	LEAVING WATER TEMPERATURE
MAX	MAXIMUM
MBH	1000 BTU PER HOUR
MC	MECHANICAL CONTRACTOR
MCA	MINIMUM CIRCUIT AMPS
MECH	MECHANICAL
MIN	MINIMUM
MFR	MANUFACTURER
NTS	NOT TO SCALE
OA	OUTSIDE AIR
OC	ON CENTER
P	PUMP
PC	PLUMBING CONTRACTOR
PLBG	PLUMBING
PSI	POUNDS PER SQUARE INCH
QTY	QUANTITY
RA	RETURN AIR
REQD	REQUIRED
REV	REVERSE OR REVISION
RG	RETURN AIR GRILLE
RPM	REVOLUTIONS PER MINUTE
RTU	ROOF TOP UNIT
SA	SUPPLY AIR
SQFT	SQUARE FEET
SG	SUPPLY GRILLE
SP	STATIC PRESSURE
SPEC	SPECIFICATIONS
SS	STAINLESS STEEL
T&B	TEST AND BALANCE
TEMP	TEMPERATURE OR TEMPORARY
TG	TRANSFER GRILLE
TYP	TYPICAL
V	VOLT
VAR	VARIABLE OR VARIES
VEL	VELOCITY
VFD	VARIABLE FREQUENCY DRIVE
VTR	VENT THRU ROOF
W/	WITH
W/IN	WITHIN
W/O	WITH OUT
WB	WET BULB
WC	WATER COLUMN (INCHES OF)
WT	WEIGHT

MECHANICAL HVAC LEGEND

EXHAUST AIR DUCT (DOWN)			EXHAUST AIR DUCT (UP)
RETURN AIR DUCT (DOWN)			RETURN AIR DUCT (UP)
OUTSIDE OR SUPPLY AIR DUCT (DOWN)			OUTSIDE OR SUPPLY AIR DUCT (UP)
DUCT SIZE	24x12		NEW DUCTWORK
FLEX DUCT			EXISTING DUCTWORK
DEMOLITION LINETYPE			SUPPLY AIR CEILING DIFFUSER
RETURN AIR GRILLE			EXHAUST AIR GRILLE
DIFFUSER, GRILLE, AND REGISTER CALL-OUTS	CALL-OUT / CFM		SCHEDULED EQUIPMENT TAG
MANUAL BALANCING DAMPER			PIPE PENETRATION THROUGH FIRE RATED WALL
FIRE DAMPER			SMOKE DAMPER
MOTORIZED DAMPER	M		FIRE/SMOKE DAMPER
THERMOSTAT	T	H	HUMIDISTAT
REMOTE SENSOR	S	C	CARBON DIOXIDE SENSOR
DUCT SMOKE DETECTOR		CM	CARBON MONOXIDE SENSOR

MECHANICAL SHEET INDEX

M000	MECHANICAL LEGEND AND NOTES
M001	MECHANICAL SITE PLAN
M002	MECHANICAL OVERALL PLAN
M101	MECHANICAL PLAN – AREA A
M102	MECHANICAL PLAN – AREA B
M103	MECHANICAL PLAN – AREA C
M104	MECHANICAL PLAN – AREA D
M110	MECHANICAL OVERALL ROOF PLAN
M111	MECHANICAL ROOF ENLARGED PLANS
M501	MECHANICAL DETAILS
M502	MECHANICAL DETAILS
M601	MECHANICAL SCHEDULES

AGP
the Abla Griffin Partnership L.L.C.
201 N. BROADWAY
SUITE 210
MOORE, OK. 73160
405.735.3477
AGP@theAGP.net
www.theAGP.net

CEDAR CREEK
CIVIL

KFC ENGINEERING
STRUCTURAL

SALAS O'BRIEN
MECHANICAL / ELECTRICAL

PROFESSIONAL ENGINEER
Dwayne Donald Kincannon
M 30842
OKLAHOMA
08/18/23

KF
drawn by

DG
checked by

JULY 2023
date

revisions

MOORE PUBLIC SCHOOLS
BOARD OF EDUCATION
MOORE, OKLAHOMA

MOORE Public Schools
LEARNING FOR LIFE

CLASSROOM ADDITION
HIGHLAND WEST
JUNIOR HIGH SCHOOL

sheet no:

M000

Salas O'Brien
2600 Van Buren St., Suite 2635
Norman, OK 73072
Salas O'Brien Registration: CA# 7058
Expiration Date : 6/30/2025
Salas O'Brien Project Number: 2023-02792-00

OWNERSHIP USE OF DOCUMENTS:

AGP EXPRESSLY RESERVES ITS COPYRIGHT AND OTHER PROPERTY RIGHTS OF ALL PLANS AND DRAWINGS DESIGNED AND/OR PRODUCED. PLANS AND DRAWINGS ARE NOT TO BE REPRODUCED IN ANY FORM OR MANNER WITHOUT THE EXPRESSED WRITTEN CONSENT OF AGP.

GENERAL NOTES

1. COORDINATE INSTALLATION OF EQUIPMENT AND DUCTWORK WITH ALL TRADES.
2. COORDINATE LOCATION OF THERMOSTATS WITH E.C. ROUGH-IN BY E.C.
3. COORDINATE CARBON DIOXIDE SENSOR LOCATION WITH EARTHSMART PRIOR TO INSTALLATION.
4. M.C. SHALL PROVIDE CARBON MONOXIDE SENSORS WHERE NEEDED PER CODE FOR EXISTING EQUIPMENT THROUGHOUT THE ENTIRE BUILDING. M.C. IS RESPONSIBLE FOR SURVEYING ENTIRE BUILDING AND LOCATING FUEL BURNING HVAC EQUIPMENT FOR SENSOR LOCATIONS. COORDINATE WITH E.C FOR POWER CONNECTIONS.

KEYED NOTES

(1) CARBON MONOXIDE DETECTOR TO BE INSTALLED IN EXISTING CLASSROOMS ACCORDING TO ALL APPLICABLE CODES. DETECTOR SHALL BE INSTALLED CENTRALLY ON CEILING. ALSO INCLUDE BATTERY BACKUP IN EVENT PRIMARY POWER IS INTERRUPTED. ALARM SIGNAL SHALL BE ROUTED TO ADMINISTRATION OFFICE. COORDINATE WITH E.C. WITH PRIMARY POWER CONNECTION AND SYSTEM CONNECTION.

1 MECHANICAL SITE PLAN
SCALE: 1/32" = 1'-0"

NORTH

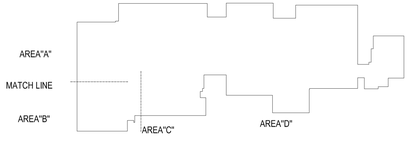

KEY PLAN

NORTH

Salas O'Brien
2600 Van Buren St., Suite 2635
Norman, OK 73072
Salas O'Brien Registration: CA# 7058
Expiration Date : 6/30/2025
Salas O'Brien Project Number: 2023-02792-00

AGP
the Abla Griffin Partnership L.L.C.
201 N. BROADWAY
SUITE 210
MOORE, OK. 73160
405.735.3477
AGP@theAGP.net
www.theAGP.net

CEDAR CREEK
CIVIL

KFC ENGINEERING
STRUCTURAL

SALAS O'BRIEN
MECHANICAL / ELECTRICAL

KF
drawn by

DG
checked by

JULY 2023
date

revisions

MOORE PUBLIC SCHOOLS
BOARD OF EDUCATION
MOORE, OKLAHOMA

MOORE Public Schools
LEARNING FOR LIFE

CLASSROOM ADDITION
HIGHLAND WEST
JUNIOR HIGH SCHOOL

sheet no:

M001

OWNERSHIP USE OF DOCUMENTS:

AGP EXPRESSLY RESERVES ITS COPYRIGHT AND OTHER PROPERTY RIGHTS OF ALL PLANS AND DRAWINGS DESIGNED AND/OR PRODUCED. PLANS AND DRAWINGS ARE NOT TO BE REPRODUCED IN ANY FORM OR MANNER WITHOUT THE EXPRESSED WRITTEN CONSENT OF AGP.

GENERAL NOTES

1. COORDINATE INSTALLATION OF EQUIPMENT AND DUCTWORK WITH ALL TRADES.
2. COORDINATE LOCATION OF THERMOSTATS WITH E.C. ROUGH-IN BY E.C.
3. COORDINATE CARBON DIOXIDE SENSOR LOCATION WITH EARTHSMART PRIOR TO INSTALLATION.
4. M.C. SHALL PROVIDE CARBON MONOXIDE SENSORS WHERE NEEDED PER CODE FOR EXISTING EQUIPMENT THROUGHOUT THE ENTIRE BUILDING. M.C. IS RESPONSIBLE FOR SURVEYING ENTIRE BUILDING AND LOCATING FUEL BURNING HVAC EQUIPMENT FOR SENSOR LOCATIONS. COORDINATE WITH E.C FOR POWER CONNECTIONS.

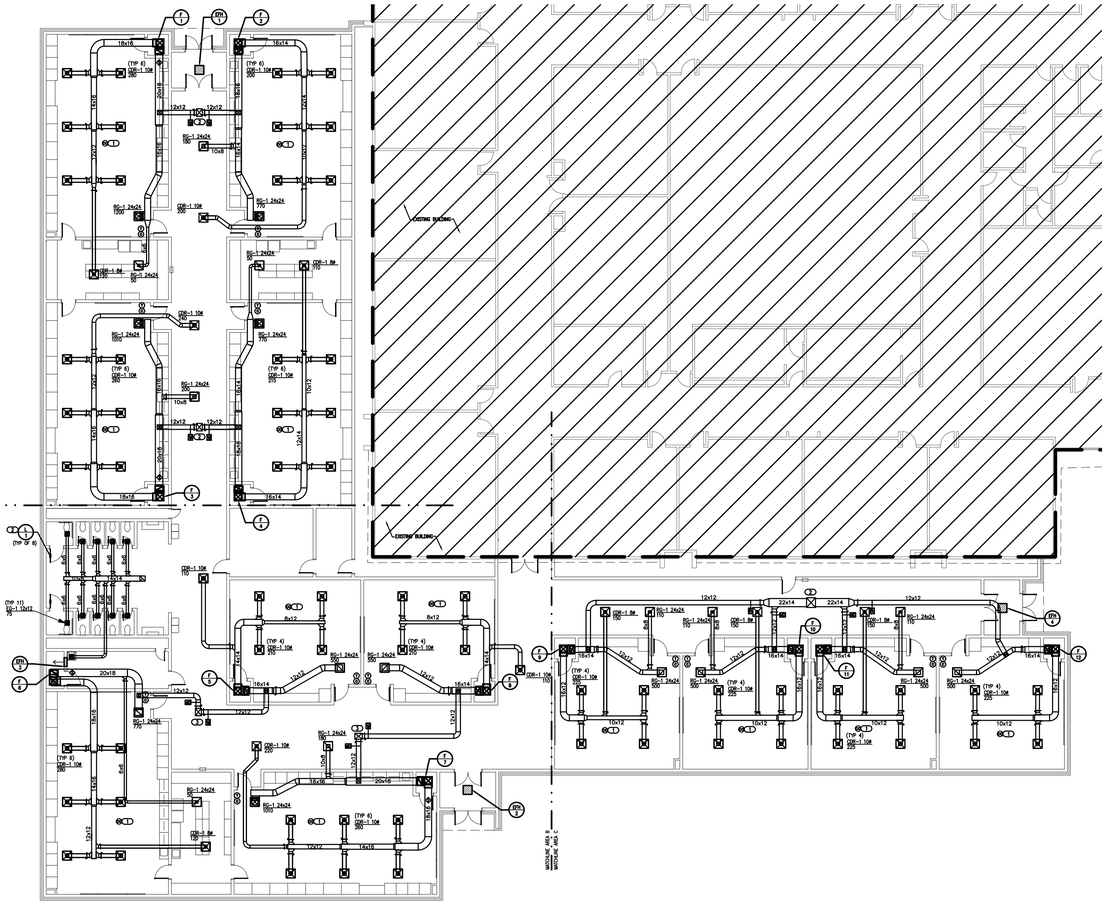

1 MECHANICAL OVERALL PLAN - CLASSROOM AREA

SCALE: 1/16" = 1'-0"

NORTH

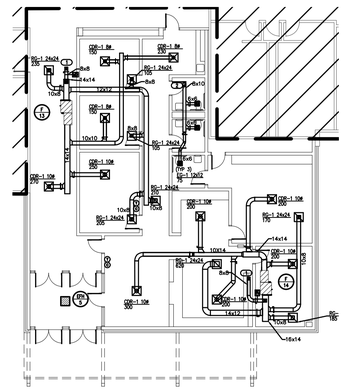

2 MECHANICAL OVERALL PLAN - OFFICE AREA

SCALE: 1/16" = 1'-0"

NORTH

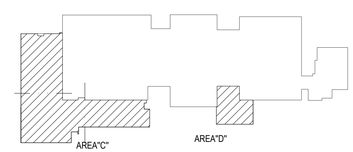

KEY PLAN

NORTH

Salas O'Brien
2600 Van Buren St., Suite 2635
Norman, OK 73072
Salas O'Brien Registration: CA# 7058
Expiration Date : 6/30/2025
Salas O'Brien Project Number: 2023-02792-00

AGP
the Abla Griffin Partnership L.L.C.
201 N. BROADWAY
SUITE 210
MOORE, OK. 73160
405.735.3477
AGP@theAGP.net
www.theAGP.net

CEDAR CREEK
CIVIL

KFC ENGINEERING
STRUCTURAL

SALAS O'BRIEN
MECHANICAL / ELECTRICAL

KF
drawn by

DG
checked by

JULY 2023
date

revisions

MOORE PUBLIC SCHOOLS
BOARD OF EDUCATION
MOORE, OKLAHOMA

MOORE Public Schools
LEARNING FOR LIFE

CLASSROOM ADDITION
HIGHLAND WEST
JUNIOR HIGH SCHOOL

sheet no:

M002

OWNERSHIP USE OF DOCUMENTS:

AGP EXPRESSLY RESERVES ITS COPYRIGHT AND OTHER PROPERTY RIGHTS OF ALL PLANS AND DRAWINGS DESIGNED AND/OR PRODUCED. PLANS AND DRAWINGS ARE NOT TO BE REPRODUCED IN ANY FORM OR MANNER WITHOUT THE EXPRESSED WRITTEN CONSENT OF AGP.

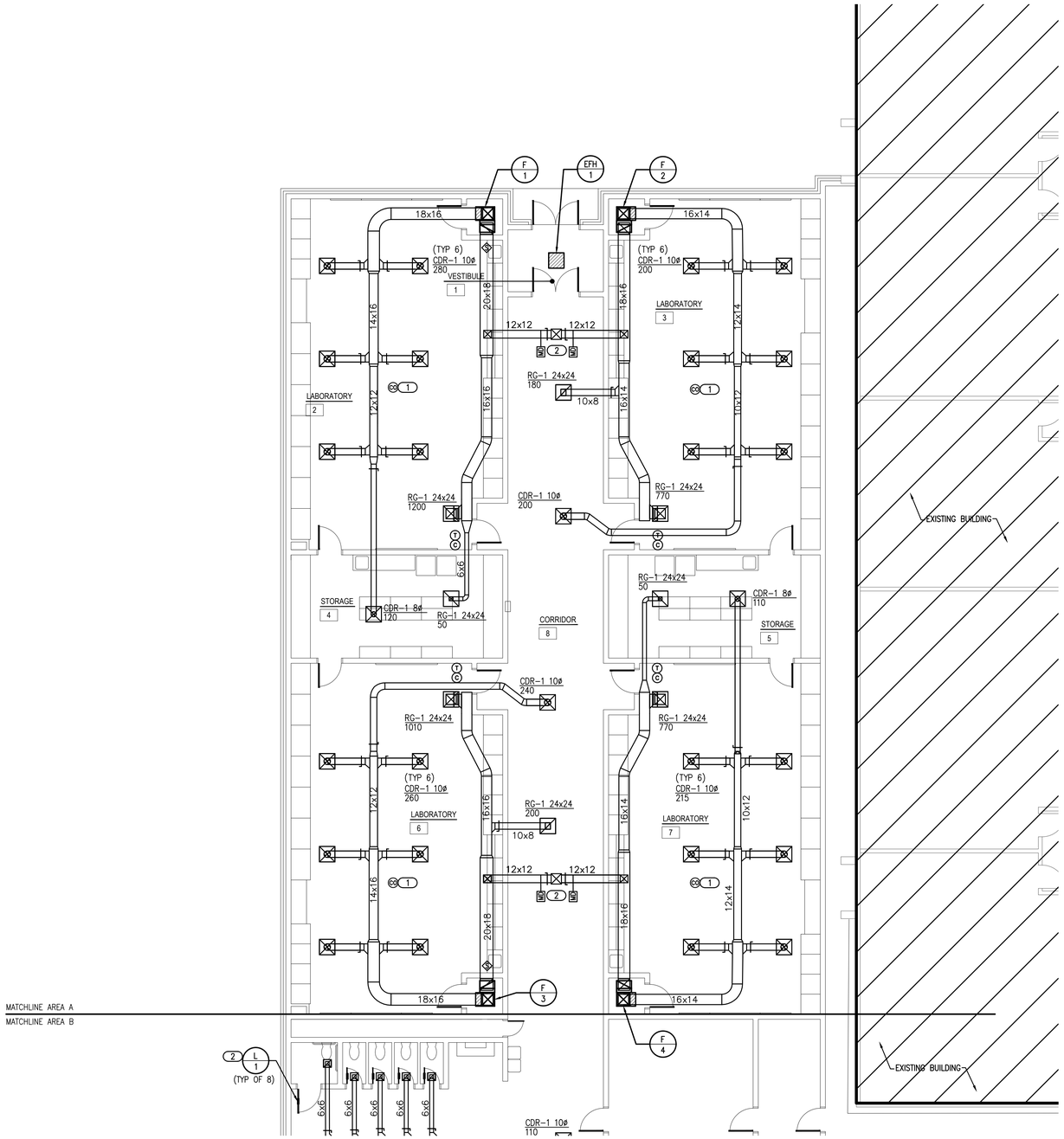

1 MECHANICAL PLAN - AREA A

SCALE: 1/8" = 1'-0"

NORTH

GENERAL NOTES

1. COORDINATE INSTALLATION OF EQUIPMENT AND DUCTWORK WITH ALL TRADES.
2. COORDINATE LOCATION OF THERMOSTATS WITH E.C. ROUGH-IN BY E.C.
3. COORDINATE CARBON DIOXIDE SENSOR LOCATION WITH EARTHSMART PRIOR TO INSTALLATION.
4. M.C. SHALL PROVIDE CARBON MONOXIDE SENSORS WHERE NEEDED PER CODE FOR EXISTING EQUIPMENT THROUGHOUT THE ENTIRE BUILDING. M.C. IS RESPONSIBLE FOR SURVEYING ENTIRE BUILDING AND LOCATING FUEL BURNING HVAC EQUIPMENT FOR SENSOR LOCATIONS. COORDINATE WITH E.C FOR POWER CONNECTIONS.

KEYED NOTES

1. CARBON MONOXIDE DETECTOR TO BE INSTALLED IN EXISTING CLASSROOMS ACCORDING TO ALL APPLICABLE CODES. DETECTOR SHALL BE INSTALLED CENTRALLY ON CEILING. ALSO INCLUDE BATTERY BACKUP IN EVENT PRIMARY POWER IS INTERRUPTED. ALARM SIGNAL SHALL BE ROUTED TO ADMINISTRATION OFFICE. COORDINATE WITH E.C. WITH PRIMARY POWER CONNECTION AND SYSTEM CONNECTION.
2. DUCT 20x16 UP TO CONNECT TO THROAT OPENING OF ROOF HOOD.

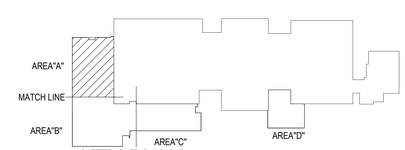

KEY PLAN

NORTH

AGP
the Abla Griffin Partnership L.L.C.
201 N. BROADWAY
SUITE 210
MOORE, OK. 73160
405.735.3477
AGP@theAGP.net
www.theAGP.net

CEDAR CREEK
CIVIL

KFC ENGINEERING
STRUCTURAL

SALAS O'BRIEN
MECHANICAL / ELECTRICAL

LICENSED PROFESSIONAL ENGINEER
Dwayne McDonald Gordon
30822
10/03/23

KF
drawn by

DG
checked by

JULY 2023
date

revisions

MOORE PUBLIC SCHOOLS
BOARD OF EDUCATION
MOORE, OKLAHOMA

MOORE Public Schools
LEARNING FOR LIFE

CLASSROOM ADDITION
HIGHLAND WEST
JUNIOR HIGH SCHOOL

sheet no:

M101

Salas O'Brien
2600 Van Buren St., Suite 2635
Norman, OK 73072
Salas O'Brien Registration: CA# 7058
Expiration Date : 6/30/2025
Salas O'Brien Project Number: 2023-02792-00

OWNERSHIP USE OF DOCUMENTS:

AGP EXPRESSLY RESERVES ITS COPYRIGHT AND OTHER PROPERTY RIGHTS OF ALL PLANS AND DRAWINGS DESIGNED AND/OR PRODUCED. PLANS AND DRAWINGS ARE NOT TO BE REPRODUCED IN ANY FORM OR MANNER WITHOUT THE EXPRESSED WRITTEN CONSENT OF AGP.

GENERAL NOTES

1. COORDINATE INSTALLATION OF EQUIPMENT AND DUCTWORK WITH ALL TRADES.
2. COORDINATE LOCATION OF THERMOSTATS WITH E.C. ROUGH-IN BY E.C.
3. COORDINATE CARBON DIOXIDE SENSOR LOCATION WITH EARTHSMART PRIOR TO INSTALLATION.
4. M.C. SHALL PROVIDE CARBON MONOXIDE SENSORS WHERE NEEDED PER CODE FOR EXISTING EQUIPMENT THROUGHOUT THE ENTIRE BUILDING. M.C. IS RESPONSIBLE FOR SURVEYING ENTIRE BUILDING AND LOCATING FUEL BURNING HVAC EQUIPMENT FOR SENSOR LOCATIONS. COORDINATE WITH E.C FOR POWER CONNECTIONS.

KEYED NOTES

(1) CARBON MONOXIDE DETECTOR TO BE INSTALLED ACCORDING TO ALL APPLICABLE CODES. DETECTOR SHALL BE INSTALLED CENTRALLY ON CEILING. ALSO INCLUDE BATTERY BACKUP IN EVENT PRIMARY POWER IS INTERRUPTED. ALARM SIGNAL SHALL BE ROUTED TO ADMINISTRATION OFFICE. COORDINATE WITH E.C. WITH PRIMARY POWER CONNECTION AND SYSTEM CONNECTION.

(2) PLACE LOUVER 8" FROM BOTTOM OF DOOR.

(3) DUCT UP 16X16 TO CONNECT TO THROAT OPENING OF ROOF HOOD.

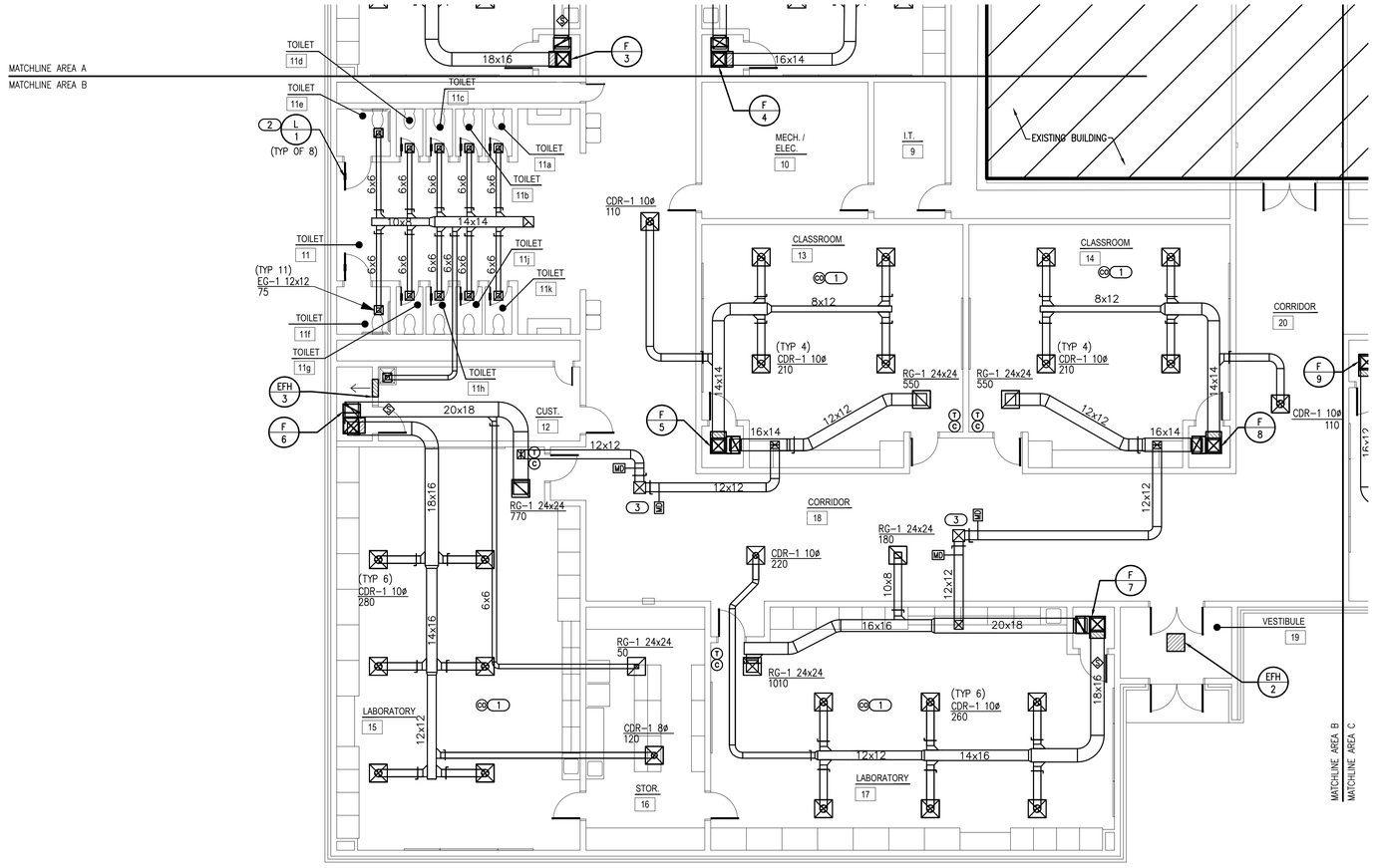

1 MECHANICAL PLAN - AREA B

SCALE: 1/8" = 1'-0"

NORTH

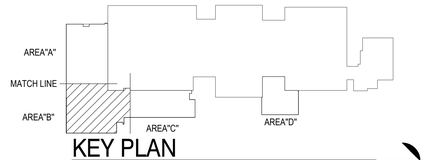

KEY PLAN

NORTH

AGP
the Abla Griffin Partnership L.L.C.

201 N. BROADWAY
SUITE 210
MOORE, OK. 73160
405.735.3477
AGP@theAGP.net
www.theAGP.net

CEDAR CREEK
CIVIL

KFC ENGINEERING
STRUCTURAL

SALAS O'BRIEN
MECHANICAL / ELECTRICAL

LICENSED PROFESSIONAL ENGINEER
Dwayne McDonald
130822
10/03/23

KF
drawn by

DG
checked by

JULY 2023
date

revisions

MOORE PUBLIC SCHOOLS
BOARD OF EDUCATION
MOORE, OKLAHOMA

MOORE Public Schools
LEARNING FOR LIFE

CLASSROOM ADDITION
HIGHLAND WEST
JUNIOR HIGH SCHOOL

sheet no:

M102

Salas O'Brien
2600 Van Buren St., Suite 2635
Norman, OK 73072
Salas O'Brien Registration: CA# 7058
Expiration Date : 6/30/2025
Salas O'Brien Project Number: 2023-02792-00

OWNERSHIP USE OF DOCUMENTS:

AGP EXPRESSLY RESERVES ITS COPYRIGHT AND OTHER PROPERTY RIGHTS OF ALL PLANS AND DRAWINGS DESIGNED AND/OR PRODUCED. PLANS AND DRAWINGS ARE NOT TO BE REPRODUCED IN ANY FORM OR MANNER WITHOUT THE EXPRESSED WRITTEN CONSENT OF AGP.

GENERAL NOTES

1. COORDINATE INSTALLATION OF EQUIPMENT AND DUCTWORK WITH ALL TRADES.
2. COORDINATE LOCATION OF THERMOSTATS WITH E.C. ROUGH-IN BY E.C.
3. COORDINATE CARBON DIOXIDE SENSOR LOCATION WITH EARTHSMART PRIOR TO INSTALLATION.
4. M.C. SHALL PROVIDE CARBON MONOXIDE SENSORS WHERE NEEDED PER CODE FOR EXISTING EQUIPMENT THROUGHOUT THE ENTIRE BUILDING. M.C. IS RESPONSIBLE FOR SURVEYING ENTIRE BUILDING AND LOCATING FUEL BURNING HVAC EQUIPMENT FOR SENSOR LOCATIONS. COORDINATE WITH E.C FOR POWER CONNECTIONS.

KEYED NOTES

(1) CARBON MONOXIDE DETECTOR TO BE INSTALLED ACCORDING TO ALL APPLICABLE CODES. DETECTOR SHALL BE INSTALLED CENTRALLY ON CEILING. ALSO INCLUDE BATTERY BACKUP IN EVENT PRIMARY POWER IS INTERRUPTED. ALARM SIGNAL SHALL BE ROUTED TO ADMINISTRATION OFFICE. COORDINATE WITH E.C. WITH PRIMARY POWER CONNECTION AND SYSTEM CONNECTION.

(2) DUCT UP 24x26 TO CONNECT TO THROAT OPENING OF ROOF HOOD.

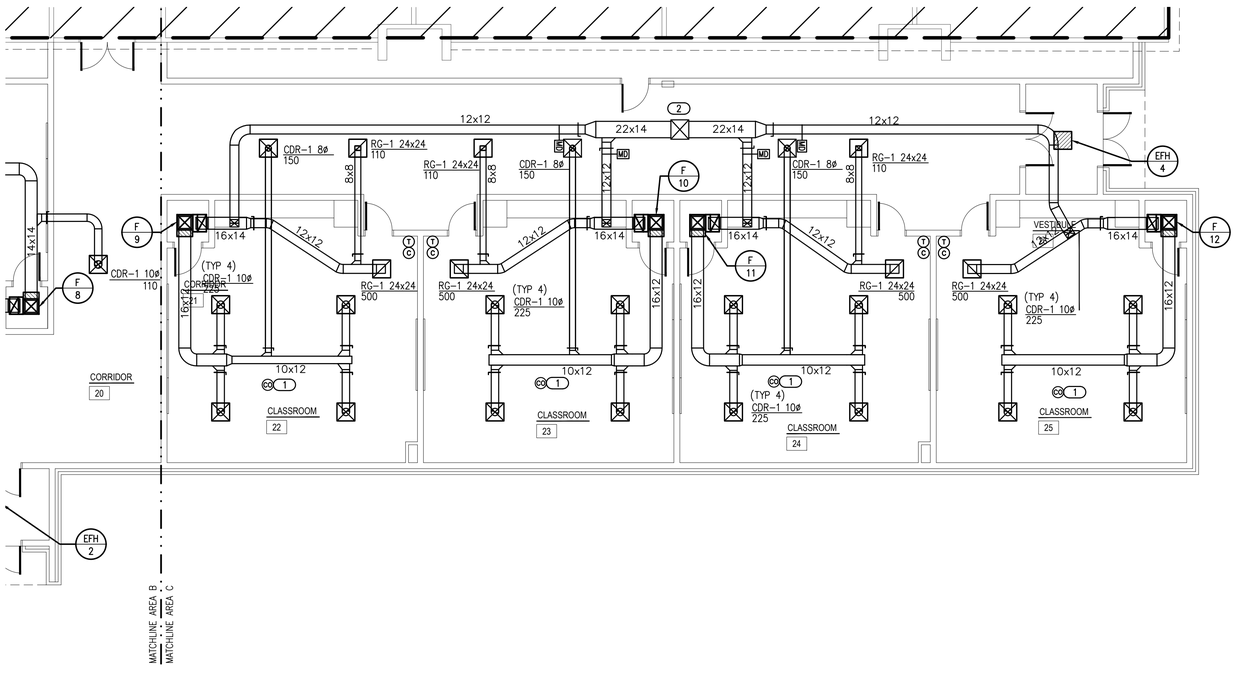

1 MECHANICAL PLAN - AREA C
SCALE: 1/8" = 1'-0"

NORTH

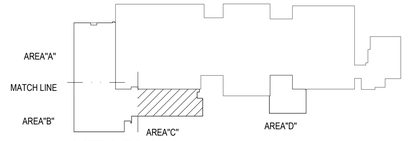

KEY PLAN

NORTH

AGP
the Abla Griffin Partnership L.L.C.
201 N. BROADWAY
SUITE 210
MOORE, OK. 73160
405.735.3477
AGP@theAGP.net
www.theAGP.net

CEDAR CREEK
CIVIL

KFC ENGINEERING
STRUCTURAL

SALAS O'BRIEN
MECHANICAL / ELECTRICAL

KF
drawn by

DG
checked by

JULY 2023
date

revisions

MOORE PUBLIC SCHOOLS
BOARD OF EDUCATION
MOORE, OKLAHOMA

MOORE Public Schools
LEARNING FOR LIFE

CLASSROOM ADDITION
HIGHLAND WEST
JUNIOR HIGH SCHOOL

sheet no:

M103

Salas O'Brien
2600 Van Buren St., Suite 2635
Norman, OK 73072
Salas O'Brien Registration: CA# 7058
Expiration Date : 6/30/2025
Salas O'Brien Project Number: 2023-02792-00

OWNERSHIP USE OF DOCUMENTS:

AGP EXPRESSLY RESERVES ITS COPYRIGHT AND OTHER PROPERTY RIGHTS OF ALL PLANS AND DRAWINGS DESIGNED AND/OR PRODUCED. PLANS AND DRAWINGS ARE NOT TO BE REPRODUCED IN ANY FORM OR MANNER WITHOUT THE EXPRESSED WRITTEN CONSENT OF AGP.

GENERAL NOTES

1. COORDINATE INSTALLATION OF EQUIPMENT AND DUCTWORK WITH ALL TRADES.
2. COORDINATE LOCATION OF THERMOSTATS WITH E.C. ROUGH-IN BY E.C.
3. COORDINATE CARBON DIOXIDE SENSOR LOCATION WITH EARTHSMART PRIOR TO INSTALLATION.

KEYED NOTES

1. DUCT UP 8x8 TO CONNECT TO THROAT OPENING OF ROOF HOOD.
2. DUCT UP TO EF 2

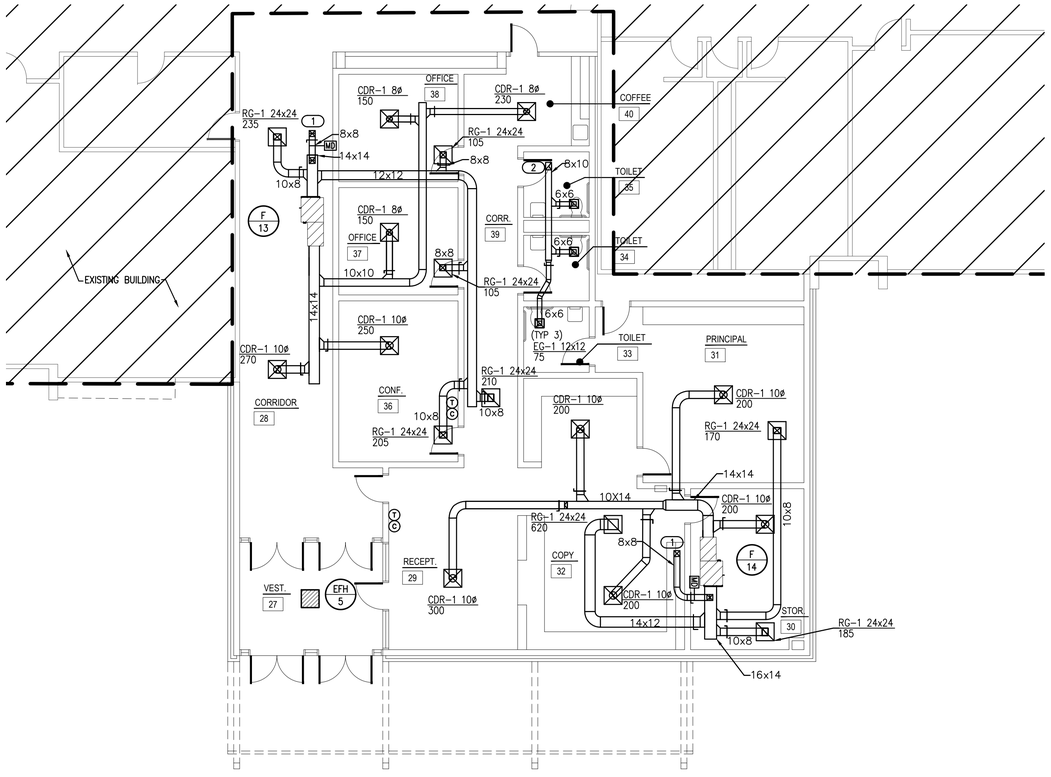

1 MECHANICAL PLAN - AREA D
SCALE: 1/8" = 1'-0"

NORTH

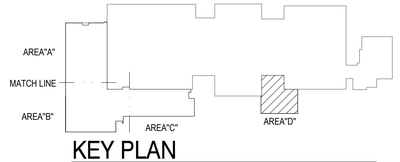

KEY PLAN

NORTH

AGP
the Abla Griffin Partnership L.L.C.
201 N. BROADWAY
SUITE 210
MOORE, OK. 73160
405.735.3477
AGP@theAGP.net
www.theAGP.net

CEDAR CREEK
CIVIL

KFC ENGINEERING
STRUCTURAL

SALAS O'BRIEN
MECHANICAL / ELECTRICAL

08/18/23

KF
drawn by

DG
checked by

JULY 2023
date

revisions

MOORE PUBLIC SCHOOLS
BOARD OF EDUCATION
MOORE, OKLAHOMA

MOORE Public Schools
LEARNING FOR LIFE

CLASSROOM ADDITION
HIGHLAND WEST
JUNIOR HIGH SCHOOL

sheet no:

M104

Salas O'Brien
2600 Van Buren St., Suite 2635
Norman, OK 73072
Salas O'Brien Registration: CA# 7058
Expiration Date : 6/30/2025
Salas O'Brien Project Number: 2023-02792-00

OWNERSHIP USE OF DOCUMENTS:

AGP EXPRESSLY RESERVES ITS COPYRIGHT AND OTHER PROPERTY RIGHTS OF ALL PLANS AND DRAWINGS DESIGNED AND/OR PRODUCED. PLANS AND DRAWINGS ARE NOT TO BE REPRODUCED IN ANY FORM OR MANNER WITHOUT THE EXPRESSED WRITTEN CONSENT OF AGP.

GENERAL NOTES

1. ALL ROOF TOP EQUIPMENT TO BE LOCATED A MINIMUM 10'-0" AWAY FROM ROOF EDGE.
2. MAINTAIN A MINIMUM OF 10'-0" HORIZONTAL CLEARANCE BETWEEN ALL EXHAUST OUTLETS AND ANY FRESH AIR INTAKES.
3. ALL ROOF SUPPORT SYSTEMS ARE TO BE MANUFACTURED FOR THE ROOF MATERIAL/SYSTEM TO BE INSTALLED. REFER TO ARCHITECTURAL PLANS FOR THE ROOF SYSTEM, CURB INSTALLATION TO BE WARRANTED BY ROOFING CONTRACTOR.

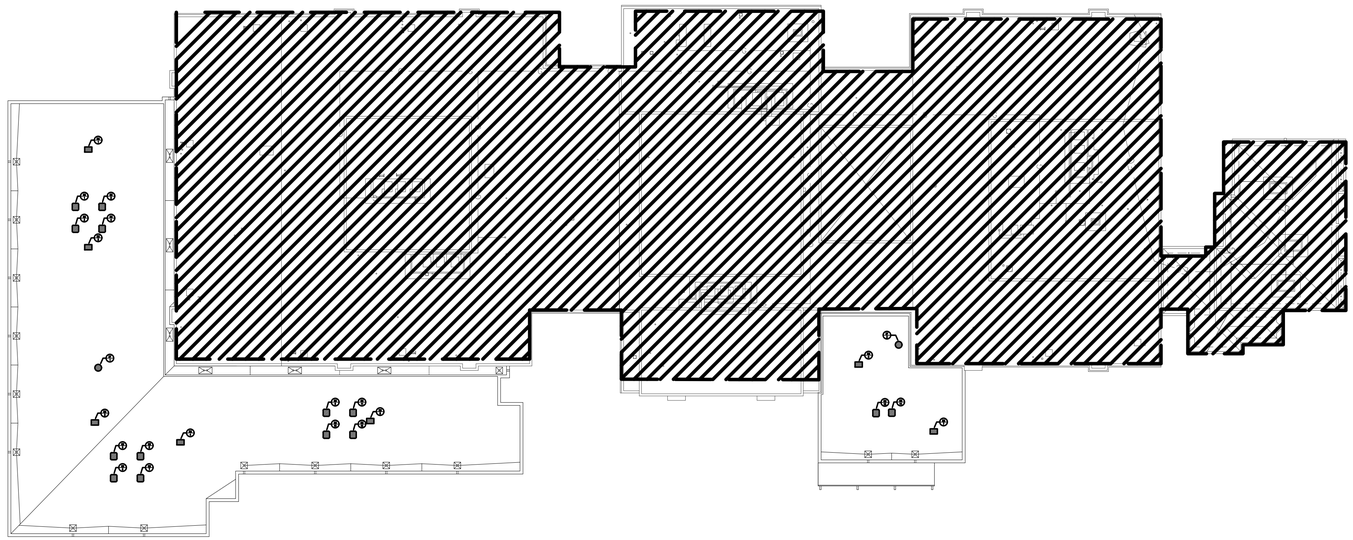

1 MECHANICAL OVERALL ROOF PLAN

SCALE: 1/32" = 1'-0"

NORTH

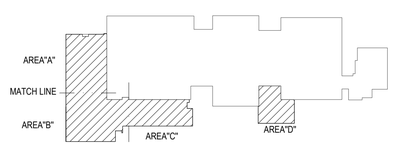

KEY PLAN

NORTH

AGP
the Abla Griffin Partnership L.L.C.

201 N. BROADWAY
SUITE 210
MOORE, OK. 73160
405.735.3477
AGP@theAGP.net
www.theAGP.net

CEDAR CREEK
CIVIL

KFC ENGINEERING
STRUCTURAL

SALAS O'BRIEN
MECHANICAL / ELECTRICAL

KF
drawn by

DG
checked by

JULY 2023
date

revisions

MOORE PUBLIC SCHOOLS
BOARD OF EDUCATION
MOORE, OKLAHOMA

MOORE Public Schools
LEARNING FOR LIFE

CLASSROOM ADDITION
HIGHLAND WEST
JUNIOR HIGH SCHOOL

sheet no:

M110

Salas O'Brien
2600 Van Buren St., Suite 2635
Norman, OK 73072
Salas O'Brien Registration: CA# 7058
Expiration Date : 6/30/2025
Salas O'Brien Project Number: 2023-02792-00

OWNERSHIP USE OF DOCUMENTS:

AGP EXPRESSLY RESERVES ITS COPYRIGHT AND OTHER PROPERTY RIGHTS OF ALL PLANS AND DRAWINGS DESIGNED AND/OR PRODUCED. PLANS AND DRAWINGS ARE NOT TO BE REPRODUCED IN ANY FORM OR MANNER WITHOUT THE EXPRESSED WRITTEN CONSENT OF AGP.

GENERAL NOTES

1. ALL ROOF TOP EQUIPMENT TO BE LOCATED A MINIMUM 10'-0" AWAY FROM ROOF EDGE.
2. MAINTAIN A MINIMUM OF 10'-0" HORIZONTAL CLEARANCE BETWEEN ALL EXHAUST OUTLETS AND ANY FRESH AIR INTAKES.
3. ALL ROOF SUPPORT SYSTEMS ARE TO BE MANUFACTURED FOR THE ROOF MATERIAL/SYSTEM TO BE INSTALLED. REFER TO ARCHITECTURAL PLANS FOR THE ROOF SYSTEM, CURB INSTALLATION TO BE WARRANTED BY ROOFING CONTRACTOR.

1 MECHANICAL ROOF PLAN - AREA A,B,C
SCALE: 1/16" = 1'-0"

NORTH

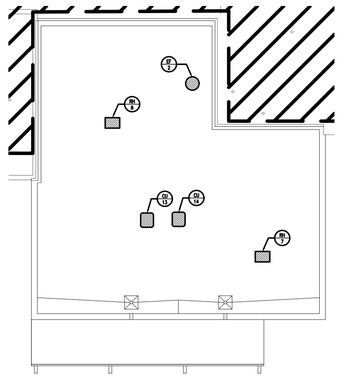

2 MECHANICAL ROOF PLAN - ARAEA D
SCALE: 1/16" = 1'-0"

NORTH

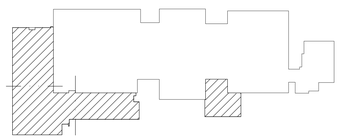

KEY PLAN

NORTH

AGP
the Abla Griffin Partnership L.L.C.
201 N. BROADWAY
SUITE 210
MOORE, OK. 73160
405.735.3477
AGP@theAGP.net
www.theAGP.net

CEDAR CREEK
CIVIL

KFC ENGINEERING
STRUCTURAL

SALAS O'BRIEN
MECHANICAL / ELECTRICAL

KF
drawn by

DG
checked by

JULY 2023
date

revisions

MOORE PUBLIC SCHOOLS
BOARD OF EDUCATION
MOORE, OKLAHOMA

MOORE Public Schools
LEARNING FOR LIFE

CLASSROOM ADDITION
HIGHLAND WEST
JUNIOR HIGH SCHOOL

sheet no:

M111

Salas O'Brien
2600 Van Buren St., Suite 2635
Norman, OK 73072
Salas O'Brien Registration: CA# 7058
Expiration Date : 6/30/2025
Salas O'Brien Project Number: 2023-02792-00

OWNERSHIP USE OF DOCUMENTS:

AGP EXPRESSLY RESERVES ITS COPYRIGHT AND OTHER PROPERTY RIGHTS OF ALL PLANS AND DRAWINGS DESIGNED AND/OR PRODUCED. PLANS AND DRAWINGS ARE NOT TO BE REPRODUCED IN ANY FORM OR MANNER WITHOUT THE EXPRESSED WRITTEN CONSENT OF AGP.

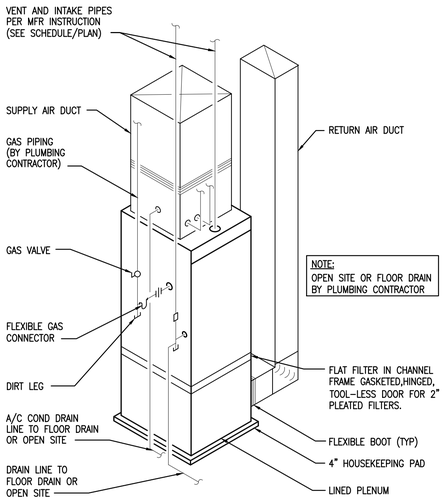

4 GAS FURNACE DETAIL - NEW CLASSROOMS
NOT TO SCALE

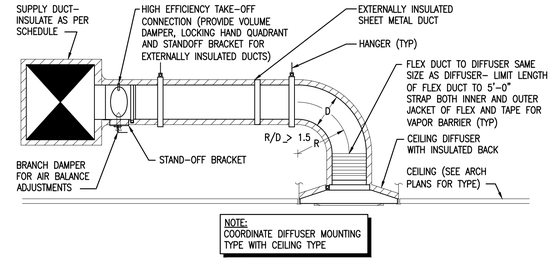

2 CEILING DIFFUSER DETAIL
NOT TO SCALE

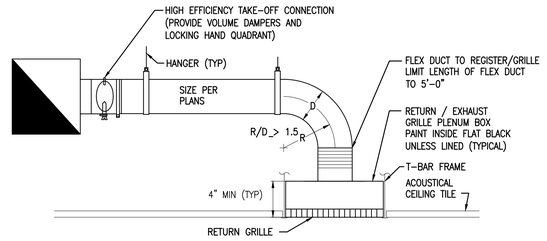

3 RETURN / EXHAUST AIR GRILLE PLENUM BOX
NOT TO SCALE

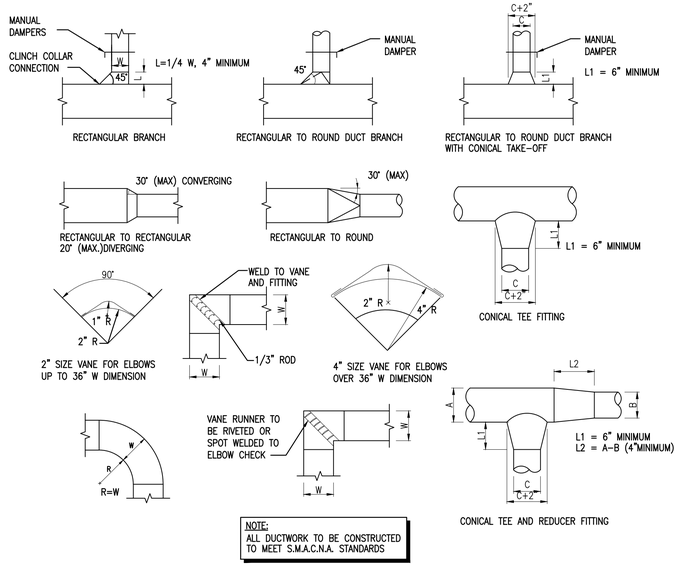

1 TYPICAL DUCTWORK DETAILS
NOT TO SCALE

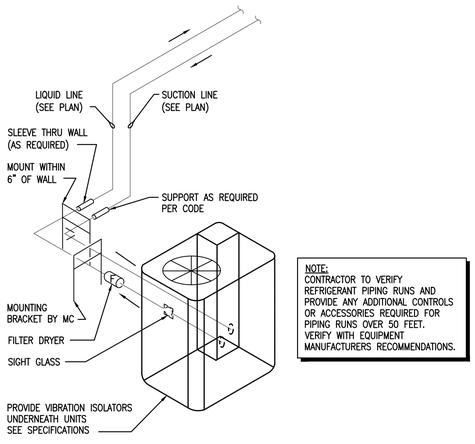

7 CONDENSING UNIT PIPING DETAIL
NOT TO SCALE

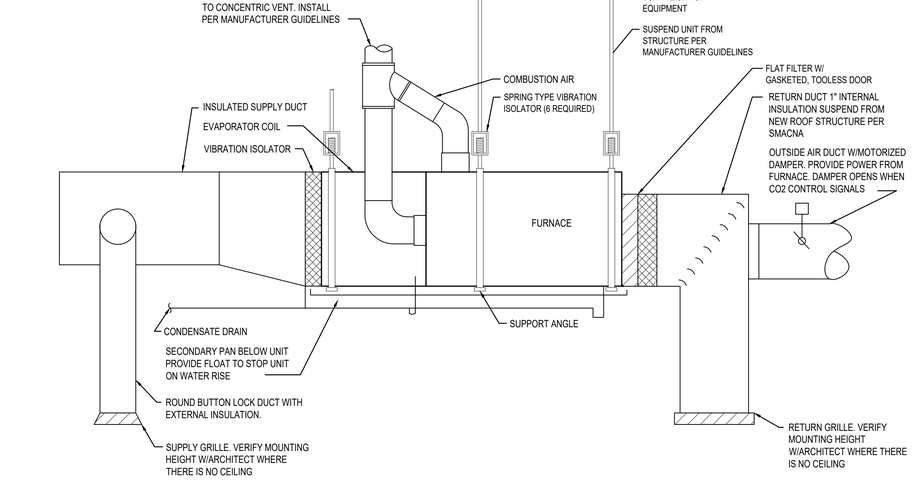

6 TYPICAL HORIZONTAL GAS FIRED FURNACE
NOT TO SCALE

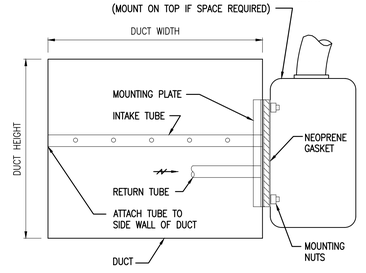

5 SMOKE DETECTOR MOUNTING DETAIL
NOT SCALE

AGP
the Abla Griffin Partnership L.L.C.
201 N. BROADWAY
SUITE 210
MOORE, OK. 73160
405.735.3477
AGP@theAGP.net
www.theAGP.net

CEDAR CREEK
CIVIL

KFC ENGINEERING
STRUCTURAL

SALAS O'BRIEN
MECHANICAL / ELECTRICAL

KF
drawn by

DG
checked by

JULY 2023
date

revisions

MOORE PUBLIC SCHOOLS
BOARD OF EDUCATION
MOORE, OKLAHOMA

MOORE Public Schools
LEARNING FOR LIFE

CLASSROOM ADDITION
HIGHLAND WEST
JUNIOR HIGH SCHOOL

sheet no:

M501

Salas O'Brien
2600 Van Buren St., Suite 2635
Norman, OK 73072
Salas O'Brien Registration: CA# 7058
Expiration Date : 6/30/2025
Salas O'Brien Project Number: 2023-02792-00

OWNERSHIP USE OF DOCUMENTS:

AGP EXPRESSLY RESERVES ITS COPYRIGHT AND OTHER PROPERTY RIGHTS OF ALL PLANS AND DRAWINGS DESIGNED AND/OR PRODUCED. PLANS AND DRAWINGS ARE NOT TO BE REPRODUCED IN ANY FORM OR MANNER WITHOUT THE EXPRESSED WRITTEN CONSENT OF AGP.

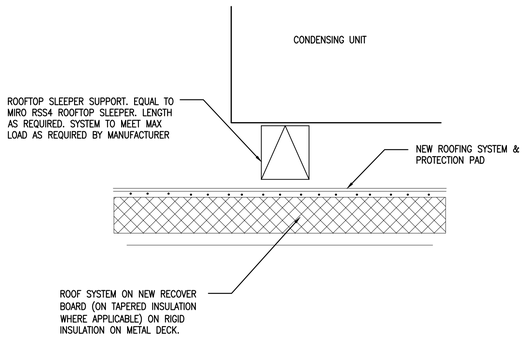

3 CONDENSING UNIT ROOF SUPPORT
NOT TO SCALE

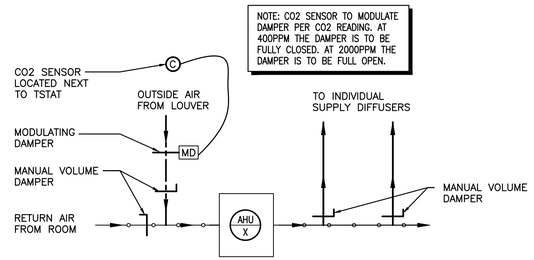

2 TYPICAL AIR BALANCING SCHEMATIC
NO SCALE

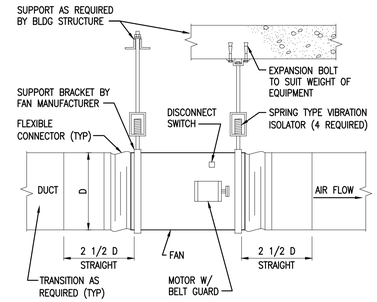

1 IN-LINE FAN MOUNTING DETAIL
NO SCALE

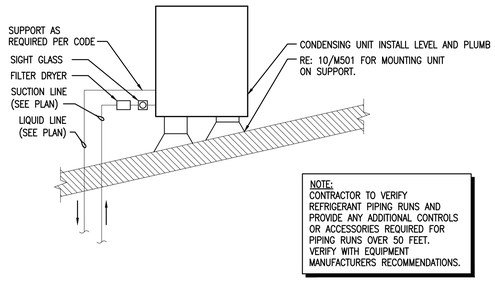

5 CONDENSING UNIT MOUNTING DETAIL
NOT TO SCALE

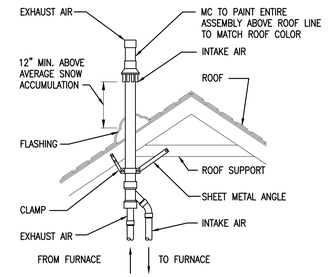

4 VENT TERMINATION DETAIL
NOT TO SCALE

AGP
the Abla Griffin Partnership L.L.C.
201 N. BROADWAY
SUITE 210
MOORE, OK. 73160
405.735.3477
AGP@theAGP.net
www.theAGP.net

CEDAR CREEK
CIVIL

KFC ENGINEERING
STRUCTURAL

SALAS O'BRIEN
MECHANICAL / ELECTRICAL

KF
drawn by

DG
checked by

JULY 2023
date

revisions

MOORE PUBLIC SCHOOLS
BOARD OF EDUCATION
MOORE, OKLAHOMA

MOORE Public Schools
LEARNING FOR LIFE

CLASSROOM ADDITION
HIGHLAND WEST
JUNIOR HIGH SCHOOL

sheet no:

M502

Salas O'Brien
2600 Van Buren St., Suite 2635
Norman, OK 73072
Salas O'Brien Registration: CA# 7058
Expiration Date : 6/30/2025
Salas O'Brien Project Number: 2023-02792-00

OWNERSHIP USE OF DOCUMENTS:

AGP EXPRESSLY RESERVES ITS COPYRIGHT AND OTHER PROPERTY RIGHTS OF ALL PLANS AND DRAWINGS DESIGNED AND/OR PRODUCED. PLANS AND DRAWINGS ARE NOT TO BE REPRODUCED IN ANY FORM OR MANNER WITHOUT THE EXPRESSED WRITTEN CONSENT OF AGP.

ELECTRIC FAN FORCED HEATER SCHEDULE

EFH #	ROOM NO.	CFM	WALL OR CEILING	KW	MOUNTING	ELECTRICAL CHAR	AMPS	SPEEDS	CONTROL	RPM	MANUFACTURER & MODEL NUMBER	NOTES
1	VEST	300	CEILING	2	RECESSED	208 / 1	9.6	1	INT STAT	1400	BERKO FFCH-548	1-3
2	VEST	300	CEILING	2	RECESSED	208 / 1	9.6	1	INT STAT	1400	BERKO FFCH-548	1-3
3	RISER	100	WALL	2	RECESSED	208 / 1	9.6	1	INT STAT	–	BERKO FRC-4020	1-4
4	VEST	300	CEILING	2	RECESSED	208 / 1	9.6	1	INT STAT	1400	BERKO FFCH-548	1-3
5	VEST	300	CEILING	2	RECESSED	208 / 1	9.6	1	INT STAT	1400	BERKO FFCH-548	1-3

NOTES: M.C. IS RESPONSIBLE FOR PROVIDING ANY AND ALL NECESSARY DIMENSIONAL, ELECTRICAL, MECHANICAL, AND STRUCTURAL ALTERATIONS NECESSITATED BY PROVIDING ALTERNATE EQUIPMENT.
1. PROVIDE INTERNAL THERMOSTAT.
2. RECESSED MOUNTED UNIT. PROVIDE RECESSED MOUNTING KIT.
3. PROVIDE BUILT-IN DISCONNECT.
4. WALL MOUNTING HEIGHT AFF AT A MINIMUM OF 18" OR PER MANUFACTURER'S RECOMMENDATION.

GAS FURNACE SCHEDULE

F #	TYPE	INPUT MBH	OUTPUT MBH	CFM	MIN F.A.	EXT. S.P.	HEAT EXCH. MTL	BLOWER SIZE	BLOWER DRIVE	BLOWER H.P.	BLOWER ELEC. CHAR	PILOT	VENT	FILTER MERV 8 MIN.	MANUFACTURER & MODEL NO.	NOTES
1	VERT	120	115	1800	550	0.6	ALUMINIZED STL	11X11	DIRECT	1	120/1	HOT S	3"	2" TA	YORK TM9V120D20MP12C	1-4
2	VERT	100	96	1400	550	0.6	ALUMINIZED STL	11X11	DIRECT	0.75	120/1	HOT S	3"	2" TA	YORK TM9V100C16MP12C	1-3
3	VERT	120	115	1800	550	0.6	ALUMINIZED STL	11X11	DIRECT	1	120/1	HOT S	3"	2" TA	YORK TM9V120D20MP12C	1-4
4	VERT	80	77	1400	550	0.6	ALUMINIZED STL	11X11	DIRECT	0.75	120/1	HOT S	3"	2" TA	YORK TM9V080C16MP12C	1-3
5	VERT	60	58	1050	400	0.6	ALUMINIZED STL	11X11	DIRECT	0.5	120/1	HOT S	3"	2" TA	YORK TM9V060B12MP12C	1-3
6	VERT	120	115	1800	550	0.6	ALUMINIZED STL	11X11	DIRECT	1	120/1	HOT S	3"	2" TA	YORK TM9V120D20MP12C	1-4
7	VERT	120	115	1800	550	0.6	ALUMINIZED STL	11X11	DIRECT	1	120/1	HOT S	3"	2" TA	YORK TM9V120D20MP12C	1-4
8	VERT	60	58	1050	400	0.6	ALUMINIZED STL	11X11	DIRECT	0.5	120/1	HOT S	3"	2" TA	YORK TM9V060B12MP12C	1-3
9	VERT	60	58	1050	400	0.6	ALUMINIZED STL	11X11	DIRECT	0.5	120/1	HOT S	3"	2" TA	YORK TM9V060B12MP12C	1-3
10	VERT	60	58	1050	400	0.6	ALUMINIZED STL	11X11	DIRECT	0.5	120/1	HOT S	3"	2" TA	YORK TM9V060B12MP12C	1-3
11	VERT	60	58	1050	400	0.6	ALUMINIZED STL	11X11	DIRECT	0.5	120/1	HOT S	3"	2" TA	YORK TM9V060B12MP12C	1-3
12	VERT	60	58	1050	400	0.6	ALUMINIZED STL	11X11	DIRECT	0.5	120/1	HOT S	3"	2" TA	YORK TM9V060B12MP12C	1-3
13	HORIZ	60	58	1050	140	0.6	ALUMINIZED STL	11X11	DIRECT	0.5	120/1	HOT S	3"	2" TA	YORK TM9V060B12MP12C	1-3
14	HORIZ	60	58	1050	140	0.6	ALUMINIZED STL	11X11	DIRECT	0.5	120/1	HOT S	3"	2" TA	YORK TM9V060B12MP12C	1-3

NOTES: M.C. IS RESPONSIBLE FOR PROVIDING ANY AND ALL NECESSARY DIMENSION, ELECTRICAL, MECHANICAL, AND STRUCTURAL ALTERATIONS NECESSITATED BY PROVIDING ALTERNATE EQUIPMENT.
1. PROVIDE CONCENTRIC VENT. INSTALL PER MANUFACTURER INSTRUCTIONS. MAINTAIN MINIMUM CLEARANCES: 36" BETWEEN VENTS, 10'-0" FROM ANY FRESH AIR INTAKE.
2. PROVIDE CO_2 SENSOR, INSTALLATION BY CONTROLS CONTRACTOR. INTERLOCK CO_2 SENSOR WITH MOTORIZED DAMPER IN OUTSIDE AIR DUCT.
3. PROVIDE FURNACE WITH 2 STAGE HEATING.
4. DUCT SMOKE DETECTOR AND REMOTE TEST STATION PROVIDED BY AND INSTALLED BY E.C. REMOTE TEST STATION TO BE LOCATED IN OCCUPIED SPACE AND CONNECTION TO FIRE ALARM SYSTEM BY E.C. COORDINATE WITH E.C.

CONDENSING UNIT SCHEDULE

CU #	CONDENSING UNIT NOMINAL TONNAGE	CONDENSING UNIT ELEC. CHAR	CONDENSING UNIT MCA	CONDENSING UNIT MOCP	CONDENSING UNIT S.E.E.R	CONDENSING UNIT WEIGHT (LBS)	CONDENSING UNIT MANUFACTURER& MODEL NO.	EVAPORATOR UNIT CFM	EVAPORATOR UNIT MAX S.P.	EVAPORATOR UNIT BLOWER MOTOR	EVAPORATOR UNIT ELEC. CHAR	EVAPORATOR UNIT MCA	EVAPORATOR UNIT MANUFACTURER & MODEL NO.	NOTES
1	5	208/1	31.4	50	15.5	295	YORK YXT60B21S	1800	0.3	– SEE FURNACE SCHEDULE –			YORK XAFD60GBCN1	1-7
2	4	208/1	28	45	16.25	295	YORK YXT48B21S	1400	0.3	– SEE FURNACE SCHEDULE –			YORK XAFC48FBCN1	1-7
3	5	208/1	31.4	50	15.5	295	YORK YXT60B21S	1800	0.3	– SEE FURNACE SCHEDULE –			YORK XAFD60GBCN1	1-7
4	4	208/1	28	45	16	295	YORK YXT48B21S	1400	0.3	– SEE FURNACE SCHEDULE –			YORK XAFC48FBCN1	1-7
5	3	208/1	21	35	15.5	265	YORK YXT36B21S	1050	0.3	– SEE FURNACE SCHEDULE –			YORK XAFB36DBCN1	1-7
6	5	208/1	31.4	50	15.5	295	YORK YXT60B21S	1800	0.3	– SEE FURNACE SCHEDULE –			YORK XAFD60GBCN1	1-7
7	5	208/1	31.4	50	15.5	295	YORK YXT60B21S	1800	0.3	– SEE FURNACE SCHEDULE –			YORK XAFD60GBCN1	1-7
8	3	208/1	21	35	15.5	265	YORK YXT36B21S	1050	0.3	– SEE FURNACE SCHEDULE –			YORK XAFB36DBCN1	1-7
9	3	208/1	21	35	15.5	265	YORK YXT36B21S	1050	0.3	– SEE FURNACE SCHEDULE –			YORK XAFB36DBCN1	1-7
10	3	208/1	21	35	15.5	265	YORK YXT36B21S	1050	0.3	– SEE FURNACE SCHEDULE –			YORK XAFB36DBCN1	1-7
11	3	208/1	21	35	15.5	265	YORK YXT36B21S	1050	0.3	– SEE FURNACE SCHEDULE –			YORK XAFB36DBCN1	1-7
12	3	208/1	21	35	15.5	265	YORK YXT36B21S	1050	0.3	– SEE FURNACE SCHEDULE –			YORK XAFB36DBCN1	1-7
13	2	208/1	15	25	16.25	200	YORK YXT24B21S	1050	0.3	– SEE FURNACE SCHEDULE –			YORK XAHB36DBAN1	1-7
14	3	208/1	21	35	15.75	265	YORK YXT36B21S	1050	0.3	– SEE FURNACE SCHEDULE –			YORK XAHB36DBCN1	1-7

NOTES: M.C. IS RESPONSIBLE FOR PROVIDING ANY AND ALL NECESSARY DIMENSIONAL, ELECTRICAL, MECHANICAL, AND STRUCTURAL ALTERATIONS NECESSITATED BY PROVIDING ALTERNATE EQUIPMENT.
1. E.C. TO PROVIDE AND INSTALL POWER DISCONNECT FOR UNIT. COORDINATE WITH M.C.
2. M.C. TO INCLUDE PRE-CHARGED LINE KIT. INSULATE SUCTION LINE.
3. TWO STAGE COOLING.
4. FOR LINE LENGTH EXCEEDING 50', M.C. MUST PROVIDE FACTORY DESIGNED AND FACTORY OR FIELD FABRICATED REFRIGERANT PIPING.
5. MOUNT UNITS ON CONDENSING UNIT SUPPORTS RE: 10/M501 FOR MORE INFORMATION.
6. INSULATE SUCTION LINE WITH 5/8" AP ARMAFLEX INSULATION OR EQUAL. SEAL ALL JOINTS WATER TIGHT TO PREVENT CONDENSATE IN THE CEILING.
7. PROVIDE UNIT WITH HAIL GUARD.

DUCTWORK/INSULATION SCHEDULE

SYSTEM	LOW PRESSURE MAX. PRES.	LOW PRESSURE SEAL A	LOW PRESSURE SEAL B	LOW PRESSURE SEAL C	MED. PRESS MAX PRES.	MED. PRESS SEAL A	HIGH PRESS. MAX PRES.	HIGH PRESS. SEAL A	INSULATION INTERNAL	INSULATION THICKNESS	INSULATION EXTERNAL	INSULATION THICKNESS	NOTES
SUPPLY AIR WITHIN 10' OF UNIT	2"	X	–	–	–	–	–	–	YES	1"	NO	–	–
SUPPLY AIR BEYOND 10' OF UNIT	2"	X	–	–	–	–	–	–	NO	–	YES	2" FSK	–
RETURN AIR WITHIN 10' OF UNIT	2"	–	X	–	–	–	–	–	YES	1"	NO	–	–
RETURN AIR BEYOND 10' OF UNIT	2"	–	X	–	–	–	–	–	NO	–	YES	2" FSK	–
OUTSIDE AIR/MIXED AIR	2"	–	X	–	–	–	–	–	NO	–	YES	3" FSK	–
EXHAUST AIR	2"	–	X	–	–	–	–	–	NO	–	YES	2" FSK	–

NOTES:

GRILLE, REGISTER, AND DIFFUSER SCHEDULE

PLAN SYMBOL	DESCRIPTION	MANUFACTURER & MODEL NO.	MATERIAL	FINISH	NOISE CRITERIA
CDR-1	SQUARE FACE, ROUND NECK, 4-WAY DEFLECTION CEILING DIFFUSER, SPRING LOCK INNER CORE, FOR LAY-IN CEILING INSTALLATION.	PRICE SCD (4C)	STEEL	WHITE	–
RG-1	SQUARE PATTERN GRILLE, FIXED CORE OF 1/2"X1/2"X1/2" FABRICATED ALUMINUM SQUARES, FLAT FRAME WITH 1 1/4" MARGIN, FOR LAY-IN CEILING INSTALLATION.	PRICE 80	ALUMINUM	WHITE	–
EG-1	SQUARE PATTERN GRILLE, FIXED CORE OF 1/2"X1/2"X1/2" FABRICATED ALUMINUM SQUARES, FLAT FRAME WITH 1 1/4" MARGIN, FOR SURFACE MOUNT INSTALLATION.	PRICE 90	ALUMINUM	WHITE	–

NOTES:
SEE AIR BALANCE SCHEDULE ON M-101 THRU M-104 FOR QUANTITY AND SIZES.
M.C. TO FIELD VERIFY CEILING TYPE FOR ALL GRD BEFORE PURCHASING EQUIPMENT. PROVIDE REQUIRED MOUNTING.

ROOF HOOD SCHEDULE

RH #	THROAT SIZE DIMENSION (IN)	THROAT AREA (FT^2)	DAMPER BDD OR MOD	CONSTRUCTION	MANUFACTURER & MODEL NO.	COMMENTS	NOTES
1	16X20	2.22	MOD	ALUMINUM	GREENHECK FGI	COLOR BY ARCHITECT	1-3
2	16X20	2.22	MOD	ALUMINUM	GREENHECK FGI	COLOR BY ARCHITECT	1-3
3	16X20	2.22	MOD	ALUMINUM	GREENHECK FGI	COLOR BY ARCHITECT	1-3
4	26X26	4.69	MOD	ALUMINUM	GREENHECK FGI	COLOR BY ARCHITECT	1-3
5	16X20	2.22	MOD	ALUMINUM	GREENHECK FGI	COLOR BY ARCHITECT	1-3
6	12X12	1	MOD	ALUMINUM	GREENHECK FGI	COLOR BY ARCHITECT	1-3
7	12X12	1	MOD	ALUMINUM	GREENHECK FGI	COLOR BY ARCHITECT	1-3

NOTES: M.C. IS RESPONSIBLE FOR PROVIDING ANY AND ALL NECESSARY DIMENSIONAL, ELECTRICAL, MECHANICAL, AND STRUCTURAL ALTERATIONS NECESSITATED BY PROVIDING ALTERNATE EQUIPMENT.
1. M.C. TO PROVIDE ROOF HOOD WITH ALUMINUM BIRDSCREEN.
2. M.C. SHALL PROVIDE ROOF CURB. CURB INSTALLATION BY G.C.
3. M.C. SHALL PROVIDE LOW VOLTAGE MOTORIZED DAMPER.

EXHAUST FAN SCHEDULE

EF #	LOCATION	SYSTEM	CFM	SP	FAN RPM	MOTOR H.P.	ELEC CHAR	AMPS	DAMPER BDD OR MOD	DRIVE	FAN TYPE	INTERLOCK/ CONTROL	WEIGHT	MANUFACTURER & MODEL NUMBER	NOTES
1	ROOF	EXHAUST	825	0.50	1656	0.25	120/1	–	MOD	DIRECT	CENT	LIGHTS	50	GREENHECK G-120-VG	1-3
2	ROOF	EXHAUST	225	0.50	1725	0.05	120/1	–	MOD	DIRECT	CENT	F-13	30	GREENHECK G-080-VG	1-3

NOTES: M.C. IS RESPONSIBLE FOR PROVIDING ANY AND ALL NECESSARY DIMENSIONAL, ELECTRICAL, MECHANICAL, AND STRUCTURAL ALTERATIONS NECESSITATED BY PROVIDING ALTERNATE EQUIPMENT.
1. PROVIDE ELECTRONIC SPEED CONTROL MOUNTED ABOVE ACCESSIBLE CEILING.
2. M.C. SHALL PROVIDE LOW VOLTAGE MOTORIZED DAMPER.
3. OPERATION OF DEVICE ON OCCUPIED MODE OF RTU OR SWITCH WITH LIGHTS. SEE INTERLOCK/CONTROL COLUMN FOR TYPE.

LOUVER SCHEDULE

L #	CONNECTED TO	SIZE (IN) (WXH)	MINIMUM FREE AREA	FLANGE	CONSTRUCTION	INCLUDE MOD	MANUFACTURER AND MODEL NUMBER	COMMENTS	NOTES
1	WC DOOR	8.5X8.5	0.28	YES	STEEL	NO	AIR CONDITIONING PRODUCTS SDL	SIGHT PROOF DOOR LOUVER	1-2

NOTES: M.C. IS RESPONSIBLE FOR PROVIDING ANY AND ALL NECESSARY DIMENSIONAL, ELECTRICAL, MECHANICAL, AND STRUCTURAL ALTERATIONS NECESSITATED BY PROVIDING ALTERNATE EQUIPMENT.
1. PROVIDE PAINTED KYNAR FINISH. COLOR BY ARCHITECT.
2. PROVIDE SLIP FIT COLLAR.

AGP
the Abla Griffin Partnership L.L.C.
201 N. BROADWAY
SUITE 210
MOORE, OK. 73160
405.735.3477
AGP@theAGP.net
www.theAGP.net

CEDAR CREEK
CIVIL

KFC ENGINEERING
STRUCTURAL

SALAS O'BRIEN
MECHANICAL / ELECTRICAL

KF
drawn by

DG
checked by

JULY 2023
date

revisions

MOORE PUBLIC SCHOOLS
BOARD OF EDUCATION
MOORE, OKLAHOMA

MOORE Public Schools
LEARNING FOR LIFE

CLASSROOM ADDITION
HIGHLAND WEST
JUNIOR HIGH SCHOOL

sheet no:

M601

Salas O'Brien
2600 Van Buren St., Suite 2635
Norman, OK 73072
Salas O'Brien Registration: CA# 7058
Expiration Date : 6/30/2025
Salas O'Brien Project Number: 2023-02792-00

OWNERSHIP USE OF DOCUMENTS:

AGP EXPRESSLY RESERVES ITS COPYRIGHT AND OTHER PROPERTY RIGHTS OF ALL PLANS AND DRAWINGS DESIGNED AND/OR PRODUCED. PLANS AND DRAWINGS ARE NOT TO BE REPRODUCED IN ANY FORM OR MANNER WITHOUT THE EXPRESSED WRITTEN CONSENT OF AGP.

GENERAL PLUMBING NOTES

1. THESE DRAWINGS SHALL NOT BE SCALED. SEE ARCHITECTURAL/CIVIL DRAWINGS FOR DIMENSIONAL INFORMATION. THIS ENGINEER WILL NOT BE LIABLE FOR MISCALCULATED PRODUCT TAKE-OFFS DUE TO SCALING OF DRAWINGS.
2. ALL SANITARY PIPING SHALL HAVE A 1/8" PER FOOT SLOPE UNLESS OTHERWISE NOTED. 2" SANITARY OR SMALLER SHALL HAVE A 1/4" PER FOOT SLOPE.
3. VENT PIPING SHOWN ON FLOOR PLANS IS DIAGRAMMATIC EXCEPT FOR VENT THRU ROOF (VTR) LOCATIONS.
4. VALVES AND FITTINGS SHALL BE OF SAME SIZE AS THE LINE ON WHICH THEY ARE LOCATED, UNLESS OTHERWISE INDICATED ON DRAWINGS.
5. CONTRACTOR SHALL COORDINATE ALL WORK WITH OTHER TRADES.
6. CONTRACTOR SHALL FIELD VERIFY ALL GIVEN MEASUREMENTS PRIOR TO LAYING AND CONNECTING ALL SANITARY AND WASTE PIPING AND NOTIFY ENGINEER OF ANY DISCREPANCIES.
7. CONTRACTOR SHALL BE RESPONSIBLE FOR MAINTAINING FIRE RATING AND WEATHERPROOFING INTEGRITY OF ALL PIPING AND PENETRATIONS.
8. ALL WATER SUPPLY AND SANITARY LINES SHALL BE RUN AS CLOSE TO PLANS AS POSSIBLE WITH NO CHANGES IN SIZING.
9. CHANGES IN THE DIRECTION OF SANITARY DRAIN PIPING SHALL NOT BE MADE WITH FITTINGS WHICH WILL CAUSE EXCESSIVE REDUCTION IN THE VELOCITY OF FLOW OR CREATE ANY OTHER ADVERSE EFFECT UNLESS PHYSICALLY IMPOSSIBLE (I.E.: USE OF SANITARY TEE IN A HORIZONTAL CONNECTION, USE OF A DOUBLE SANITARY TEE IN A VERTICAL STACK, IN GENERAL, USE OF SHORT-RADIUS FITTINGS FOR BRANCH TO HOUSE DRAIN OR STACK CONNECTION).
10. CONTRACTOR SHALL GIVE 48 HOURS HOUR EMERGENCY LOCATE NOTICE TO APPLICABLE UTILITY COMPANY PRIOR TO PERFORMING WORK INVOLVING UTILITIES.
11. ALL DRAINAGE PIPING SHALL BE MARKED WITH THE SEAL OF APPROVAL OF THE NATIONAL SANITATION FOUNDATION.
12. ROUTE ALL PIPING CONCEALED ABOVE CEILINGS, WITHIN WALLS, OR IN CHASES. PIPING EXPOSED SHALL BE SLOPED AND PAINTED TO MATCH ARCHITECTURAL FINISHES. PIPING IN MECHANICAL ROOMS MAY BE EXPOSED.
13. SITE UTILITY CONNECTIONS SHALL BE PROVIDED ON CIVIL DRAWINGS. ALL SERVICES SHOWN ON THIS SET OF PLANS TERMINATE 5'-0" FROM BUILDING, UNLESS SHOWN OTHERWISE ON DRAWINGS. PLUMBING CONTRACTOR SHALL MAKE FINAL CONNECTIONS TO SITE UTILITIES. (INC. CLEAN OUTS, INCREASES, BACKWATER VALVES, ETC.)
14. COORDINATE WITH ARCHITECT/GENERAL CONTRACTOR FOR INSTALLATION OF HOSE BIBS. HEIGHT OF INSTALLATION SHALL BE DETERMINED IN FIELD.
15. CONTRACTOR SHALL VERIFY INVERT ELEVATIONS OF SEWERS TO WHICH NEW SEWER LINES ARE TO BE CONNECTED BEFORE INSTALLATION OF NEW SEWER LINE.
16. ALL VENTS THROUGH ROOF SHALL BE MIN. 10'-0" FROM ANY AIR INTAKES.
17. CONTRACTOR SHALL INSTALL DIELECTRIC UNIONS AT CONNECTIONS OF DISSIMILAR METALS.
18. CONTRACTOR SHALL ROUGH-IN ALL WASTES AND SUPPLIES TO SPECIAL EQUIPMENT ACCORDING TO MANUFACTURER'S SHOP DRAWINGS AND MAKE FINAL CONNECTIONS. ALL SUPPLIES SHALL BE VALVED. INSTALL VACUUM BREAKERS WHERE REQUIRED BY CODE.
19. DO NOT PENETRATE WALL FOOTINGS WITH PIPING, COORDINATE WITH GENERAL CONTRACTOR TO DROP FOOTINGS AS REQUIRED TO CLEAR PLUMBING SERVICES WHERE ABSOLUTELY NECESSARY. ALL PIPING PENETRATING A BEARING WALL OR FOOTING MUST BE SLEEVED AND LOCATION APPROVED BY STRUCTURAL ENGINEER. PROVIDE LINK-SEALS IN ALL PENETRATIONS OF EXTERIOR WALLS.
20. ALL PIPING SHALL BE INSTALLED AS HIGH AS POSSIBLE IN PROVIDED CEILING SPACE.
21. COORDINATE PIPING INSTALLATION AS TO NOT INTERFERE WITH HVAC EQUIPMENT ACCESS.
22. ANY ERRORS OR AMBIGUITIES IN THE PLANS AND/OR SPECIFICATIONS THAT ARE DISCOVERED BY THE CONTRACTOR SHALL BE REPORTED TO THE ARCHITECT/ENGINEER BEFORE WORK IS STARTED. OMISSION OF PARTICULAR REFERENCE TO ANY ITEM NECESSARY FOR COMPLETE INSTALLATION AND PROPER OPERATION THEREOF SHALL NOT RELIEVE THE CONTRACTOR OF THE RESPONSIBILITY OF FURNISHING THE SAME AT NO EXTRA COST. THE CONTRACTOR IS RESPONSIBLE FOR REVIEWING ALL CONSTRUCTION DOCUMENTS FOR INFORMATION PRIOR TO BID.
23. VERIFY WITH ARCHITECT ON ALL EQUIPMENT AND FIXTURES REQUIRING PLUMBING PRIOR TO BID. COORDINATE EXACT LOCATIONS AND CONNECTIONS.
24. ALL WORK SHALL BE IN COMPLIANCE WITH STATE AND LOCAL CODES.
25. CONTRACTOR SHALL PAY ALL FEES, PERMITS, LICENSES, ETC. NECESSARY FOR PROPER COMPLETION OF WORK.
26. INSTALL ALL EQUIPMENT IN ACCORDANCE WITH MANUFACTURER'S RECOMMENDATIONS.

PLUMBING PIPING LINETYPES

LINETYPE	DESCRIPTION
	DEMOLITION
G	GAS
	SANITARY ABOVE GRADE
	SANITARY BELOW GRADE
	STORM ABOVE GRADE
	STORM BELOW GRADE
	VENT ABOVE GRADE
	VENT BELOW GRADE
	COLD WATER
	COLD WATER BELOW GRADE
	HOT WATER
	HOT WATER BELOW GRADE
	RECIRC WATER
	RECIRC WATER BELOW GRADE

PLUMBING PIPING LEGEND

	CIRCUIT SETTER
	BALL VALVE OR SHUT-OFF VALVE
	SPRING CHECK VALVE
	END CAP
	NEW TO EXISTING PIPE CONNECTION
	FLOW DIRECTION ARROW
	NEW TO EXISTING POINT OF CONNECTION SYMBOL
	PIPE CONNECTION
	HAMMER ARRESTOR (PISTON TYPE)
	HAMMER ARRESTOR (BELLOWS TYPE)
	PIPING LINEWEIGHT: NEW/DEMOLITION
	PIPING LINEWEIGHT: EXISTING

PLUMBING ABBREVIATIONS

AG	ABOVE GRADE	MAU	MAKE-UP AIR UNIT
ADD	ADDENDUM	MC	MECHANICAL CONTRACTOR
ADDL	ADDITIONAL	MECH	MECHANICAL
ADJ	ADJUSTABLE	MIN	MINIMUM
AFF	ABOVE FINISH FLOOR	NG	NATURAL GAS
AFG	ABOVE FINISH GRADE	NTS	NOT TO SCALE
ALT	ALTERNATE	NPCW	NON POTABLE COLD WATER
BG	BELOW GRADE	ORD	OVERFLOW ROOF DRAIN
CO	CLEANOUT	OS	OPEN SITE
COL	COLUMN	OSD	OVERFLOW STORM DRAIN
CW	COLD WATER	PC	PLUMBING CONTRACTOR
DN	DOWN	PLBG	PLUMBING
DS	DOWNSPOUT	PRES	PRESSURE
EC	ELECTRICAL CONTRACTOR	QTY	QUANTITY
ECO	EXTERIOR CLEANOUT	RD	ROOF DRAIN
EQ	EQUAL	RTU	ROOFTOP UNIT
FCO	FLOOR CLEANOUT	SAN	SANITARY
FD	FLOOR DRAIN	SCH	SCHEDULE
FLR	FLOOR	SD	STORM DRAIN
FS	FLOOR SINK	SPEC	SPECIFICATIONS
FT	FOOT (FEET)	SS	STAINLESS STEEL
F	FURNACE	TEMP	TEMPERATURE
GAL	GALLON	TYP	TYPICAL
GC	GENERAL CONTRACTOR	UR	URINAL
GPM	GALLONS PER MINUTE	V	VENT
GI	GREASE INTERCEPTOR	VTR	VENT THRU ROOF
GW	GREASE WASTE	W/	WITH
HW	HOT WATER	WCO	WALL CLEANOUT
HWR	HOT WATER RETURN	WC	WATER CLOSET

PLUMBING SHEET INDEX

P000	PLUMBING TITLE SHEET
PD101	PLUMBING DEMOLITION PLAN – OVERALL
P001	PLUMBING PLAN – SITE
P101	PLUMBING PLAN – BELOW GRADE – AREA A
P102	PLUMBING PLAN – BELOW GRADE – AREA B
P103	PLUMBING PLAN – BELOW GRADE – AREA C
P104	PLUMBING PLAN – BELOW GRADE – AREA D
P110	PLUMBING PLAN – ABOVE GRADE – AREA A
P111	PLUMBING PLAN – ABOVE GRADE – AREA B
P112	PLUMBING PLAN – ABOVE GRADE – AREA C
P113	PLUMBING PLAN – ABOVE GRADE – AREA D
P201	PLUMBING PLAN – ROOF
P301	PLUMBING ISOMETRICS – WASTE & VENT
P302	PLUMBING ISOMETRICS – WATER SUPPLY
P501	PLUMBING DETAILS
P601	PLUMBING SCHEDULES

Salas O'Brien
2600 Van Buren St., Suite 2635
Norman, OK 73072
Salas O'Brien Registration: CA# 7058
Expiration Date : 6/30/2025

Salas O'Brien Project Number: 2023-02792-00

AGP
the Abla Griffin Partnership L.L.C.
201 N. BROADWAY
SUITE 210
MOORE, OK. 73160
405.735.3477
AGP@theAGP.net
www.theAGP.net

CEDAR CREEK
CIVIL

KFC ENGINEERING
STRUCTURAL

SALAS O'BRIEN
MECHANICAL / ELECTRICAL

KC
drawn by

KP
checked by

JULY 2023
date

revisions

MOORE PUBLIC SCHOOLS
BOARD OF EDUCATION
MOORE, OKLAHOMA

MOORE Public Schools
LEARNING FOR LIFE

CLASSROOM ADDITION
HIGHLAND WEST
JUNIOR HIGH SCHOOL

sheet no:

P000

OWNERSHIP USE OF DOCUMENTS:

AGP EXPRESSLY RESERVES ITS COPYRIGHT AND OTHER PROPERTY RIGHTS OF ALL PLANS AND DRAWINGS DESIGNED AND/OR PRODUCED. PLANS AND DRAWINGS ARE NOT TO BE REPRODUCED IN ANY FORM OR MANNER WITHOUT THE EXPRESSED WRITTEN CONSENT OF AGP.

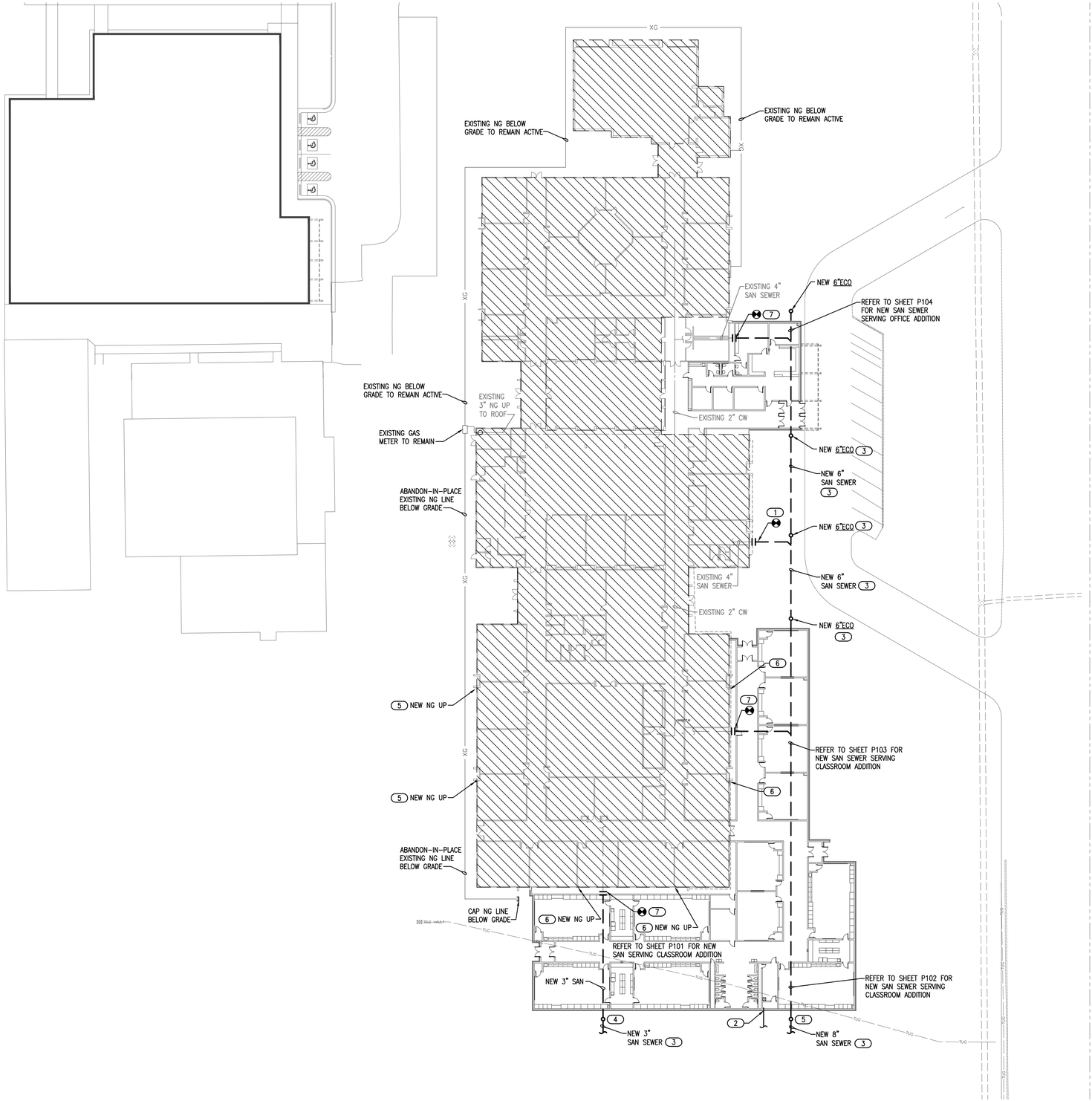

1 PLUMBING PLAN - SITE

SCALE: 1/32" = 1'-0"

NORTH

GENERAL NOTES

1. COORDINATE WORK WITH ALL OTHER TRADES ON SITE.
2. FIELD VERIFY EXISTING CONDITION PRIOR TO COMMENCING WORK.
3. COORDINATE ANY UTILITY SHUT-DOWNS WITH OWNER, UTILITY COMPANY AND GENERAL CONTRACTOR.
4. HATCHED AREA INDICATES EXISTING SCHOOL BUILDING.

KEYED NOTES

1. CONNECT NEW 4" SANITARY SEWER TO EXISTING 4" LINE BELOW GRADE. INSTALL EXTERIOR CLEANOUT. COORDINATE WITH SITE CONTRACTOR FOR INSTALLATION.
2. NEW 6" FIRE LINE BELOW GRADE TO NEW CLASSROOM ADDITION. COORDINATE INSTALLATION WITH SITE CONTRACTOR AND FIRE PROTECTION CONTRACTOR.
3. COORDINATE WITH SITE CONTRACTOR FOR NEW BELOW GRADE SANITARY SEWER AND CLEANOUT LOCATIONS. REFER TO CIVIL UTILITY PLAN.
4. NEW EXTERIOR CLEANOUTS AND SANITARY BACKWATER VALVE. SEE SHEET P101.
5. NEW EXTERIOR CLEANOUTS AND SANITARY BACKWATER VALVE. SEE SHEET P102.
6. CONNECT NEW NATURAL GAS LINE TO EXISTING LINE STUBBED OUT OF WALL FROM FURNACE CLOSET AND ROUTE NEW GAS LINE UP TO ROOF. SEE SHEET P201 FOR CONTINUATION ON ROOF.
7. CONNECT NEW 4" SANITARY SEWER TO EXISTING 4" LINE BELOW GRADE. INSTALL FLOOR CLEANOUT.

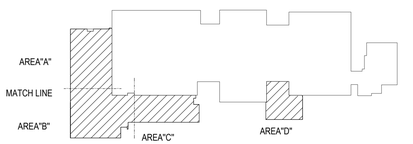

KEY PLAN

NORTH

AGP
the Abla Griffin Partnership L.L.C.

201 N. BROADWAY
SUITE 210
MOORE, OK. 73160
405.735.3477
AGP@theAGP.net
www.theAGP.net

CEDAR CREEK
CIVIL

KFC ENGINEERING
STRUCTURAL

SALAS O'BRIEN
MECHANICAL / ELECTRICAL

KC
drawn by

KP
checked by

JULY 2023
date

revisions

MOORE PUBLIC SCHOOLS
BOARD OF EDUCATION
MOORE, OKLAHOMA

MOORE Public Schools
LEARNING FOR LIFE

CLASSROOM ADDITION
HIGHLAND WEST
JUNIOR HIGH SCHOOL

sheet no:

P001

Salas O'Brien
2600 Van Buren St., Suite 2635
Norman, OK 73072
Salas O'Brien Registration: CA# 7058
Expiration Date : 6/30/2025
Salas O'Brien Project Number: 2023-02792-00

OWNERSHIP USE OF DOCUMENTS:

AGP EXPRESSLY RESERVES ITS COPYRIGHT AND OTHER PROPERTY RIGHTS OF ALL PLANS AND DRAWINGS DESIGNED AND/OR PRODUCED. PLANS AND DRAWINGS ARE NOT TO BE REPRODUCED IN ANY FORM OR MANNER WITHOUT THE EXPRESSED WRITTEN CONSENT OF AGP.

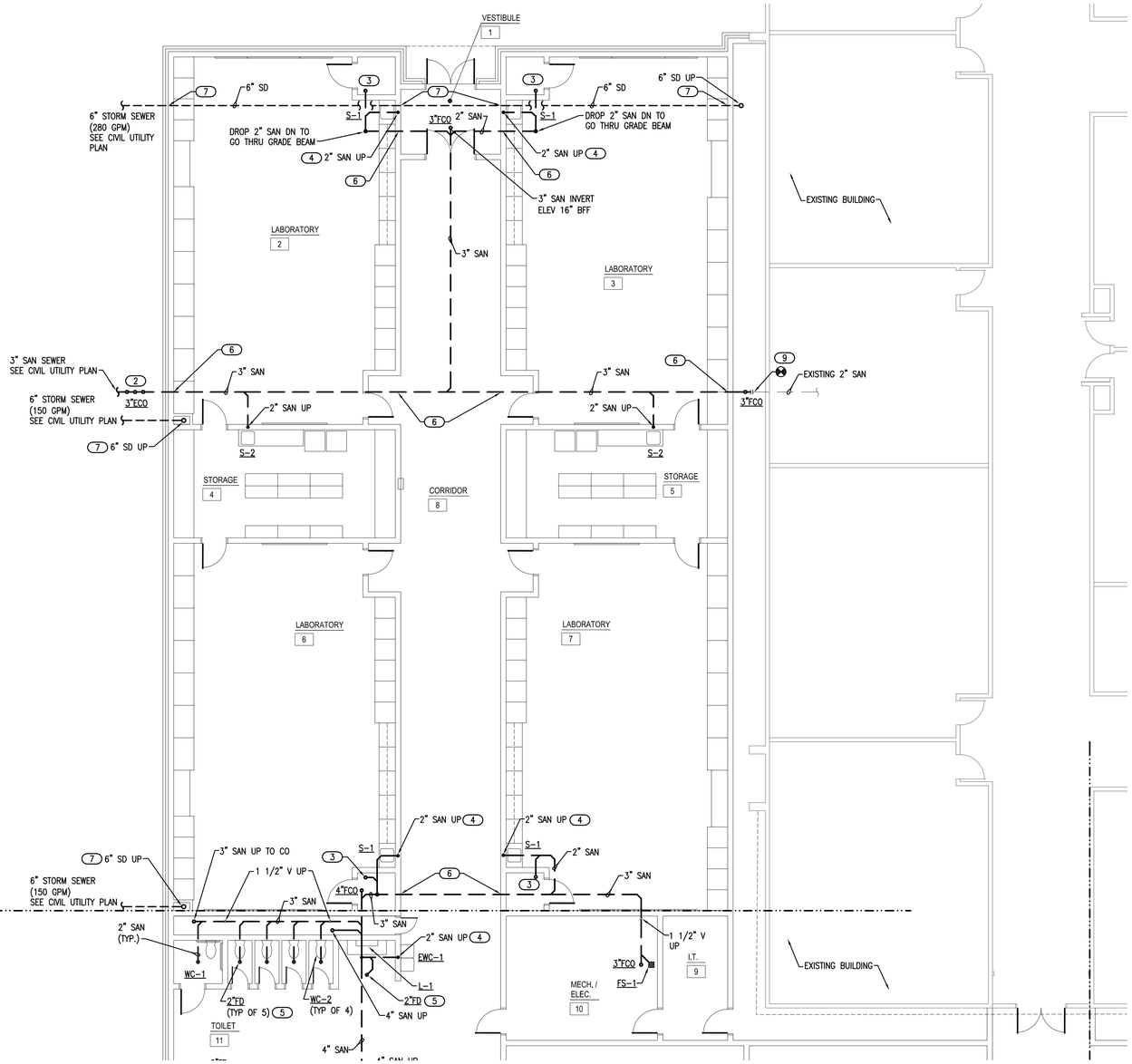

1 PLUMBING PLAN - BELOW GRADE - AREA A

SCALE: 1/8" = 1'-0"

NORTH

GENERAL NOTES

1. COORDINATE WORK WITH ALL OTHER TRADES ON SITE.
2. COORDINATE ALL BELOW GRADE PIPE ROUTING WITH STRUCTURAL FOUNDATIONS AND REQUIRED PIPE SLEEVES THRU FOUNDATION PENETRATIONS.
3. FIELD VERIFY EXISTING CONDITIONS PRIOR TO COMMENCING WORK.
4. PRIOR TO COMMENCING WORK, COORDINATE WITH SITE CONTRACTOR FOR SANITARY SEWER AND WATER INVERT ELEVATIONS.
5. REFER TO PLUMBING FIXTURE SCHEDULE ON SHEET P601 FOR FIXTURE ROUGH-IN PIPE SIZES.
6. PIPE TRENCHES SHALL HAVE SAND BEDDING TO A MINIMUM POINT 6" ABOVE THE TOP OF PIPE. REFER TO SPECIFICATION SECTION 22 05 00.
7. INSTALL BELOW FLOOR 1/2" CW LINE TYPE K COPPER OR PEX-a FOR TRAP PRIMER TO FLOOR DRAINS. SLOPE LINE CONTINUOUSLY TOWARDS DRAIN. SEE DETAIL 1/P501.

KEYED NOTES

1. PROVIDE CAST IRON PIPE SLEEVE FOR SANITARY PIPE BELOW GRADE BEAM. INSTALL FOAM SPACER BLOCKS TO MAINTAIN PIPE IN CENTER OF SLEEVE. COORDINATE PIPE SLEEVE INSTALLATION WITH STRUCTURAL.
2. INSTALL 4" SANITARY BACKWATER VALVE AND 4" EXTERIOR CLEANOUTS. PROVIDE CONCRETE PAD AT GRADE. SEE DETAIL 4/P501.
3. ROUTE 2" SANITARY LINE UP TO 2" AFF AND INSTALL 2x4 FITTING FOR HUB DRAIN. COORDINATE INSTALLATION WITH MC. ROUTE TRAP PRIMER LINE TO HUB DRAIN. MC TO ROUTE FURNACE CONDENSATE DRAIN LINES TO HUB DRAIN. SEE DETAIL1/P501.
4. COORDINATE WITH STRUCTURAL FOR ROUTING SANITARY UP TO ABOVE GRADE BEAM AND UP INTO WALL ABOVE.
5. INSTALL BELOW FLOOR 1/2" CW LINE TYPE K COPPER OR PEX-a FOR TRAP PRIMER TO FLOOR DRAIN. SLOPE LINE CONTINUOUSLY TOWARDS DRAIN. SEE DETAIL 1/P501.
6. PROVIDE CAST IRON PIPE SLEEVE FOR SANITARY PIPE THRU GRADE BEAM. INSTALL FOAM SPACER BLOCKS TO MAINTAIN PIPE IN CENTER OF SLEEVE. COORDINATE PIPE SLEEVE INSTALLATION WITH STRUCTURAL.
7. PROVIDE CAST IRON PIPE SLEEVE FOR STORM PIPE THRU OR BELOW GRADE BEAM. INSTALL FOAM SPACER BLOCKS TO MAINTAIN PIPE IN CENTER OF SLEEVE. COORDINATE PIPE SLEEVE INSTALLATION WITH STRUCTURAL.
8. CONNECT NEW 4" SANITARY LINE TO EXISTING SANITARY LINE. INSTALL 4" FLOOR CLEANOUT. FIELD VERIFY INVERT ELEVATION OF EXISTING SANITARY LINE.
9. CONNECT NEW 3" SANITARY LINE TO EXISTING 2" SANITARY LINE. INSTALL 3" FLOOR CLEANOUT. FIELD VERIFY INVERT ELEVATION OF EXISTING SANITARY LINE.
10. PROVIDE CAST IRON PIPE SLEEVE FOR FIRE LINE THRU OR BELOW GRADE BEAM. INSTALL FOAM SPACER BLOCKS TO MAINTAIN PIPE IN CENTER OF SLEEVE. COORDINATE PIPE SLEEVE INSTALLATION WITH STRUCTURAL. COORDINATE INVERT ELEVATION WITH SITE CONTRACTOR.

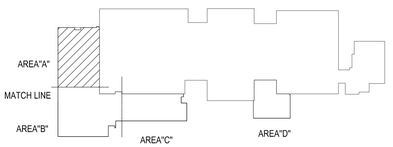

KEY PLAN

NORTH

AGP
the Abla Griffin Partnership L.L.C.

201 N. BROADWAY
SUITE 210
MOORE, OK. 73160
405.735.3477
AGP@theAGP.net
www.theAGP.net

CEDAR CREEK
CIVIL

KFC ENGINEERING
STRUCTURAL

SALAS O'BRIEN
MECHANICAL / ELECTRICAL

LICENSED PROFESSIONAL ENGINEER
Dwayne McDonald
1/30/22
OKLAHOMA
20/03/22

KC
drawn by

KP
checked by

JULY 2023
date

revisions

MOORE PUBLIC SCHOOLS
BOARD OF EDUCATION
MOORE, OKLAHOMA

MOORE Public Schools
LEARNING FOR LIFE

CLASSROOM ADDITION
HIGHLAND WEST
JUNIOR HIGH SCHOOL

sheet no:

P101

Salas O'Brien
2600 Van Buren St., Suite 2635
Norman, OK 73072
Salas O'Brien Registration: CA# 7058
Expiration Date : 6/30/2025
Salas O'Brien Project Number: 2023-02792-00

OWNERSHIP USE OF DOCUMENTS:

AGP EXPRESSLY RESERVES ITS COPYRIGHT AND OTHER PROPERTY RIGHTS OF ALL PLANS AND DRAWINGS DESIGNED AND/OR PRODUCED. PLANS AND DRAWINGS ARE NOT TO BE REPRODUCED IN ANY FORM OR MANNER WITHOUT THE EXPRESSED WRITTEN CONSENT OF AGP.

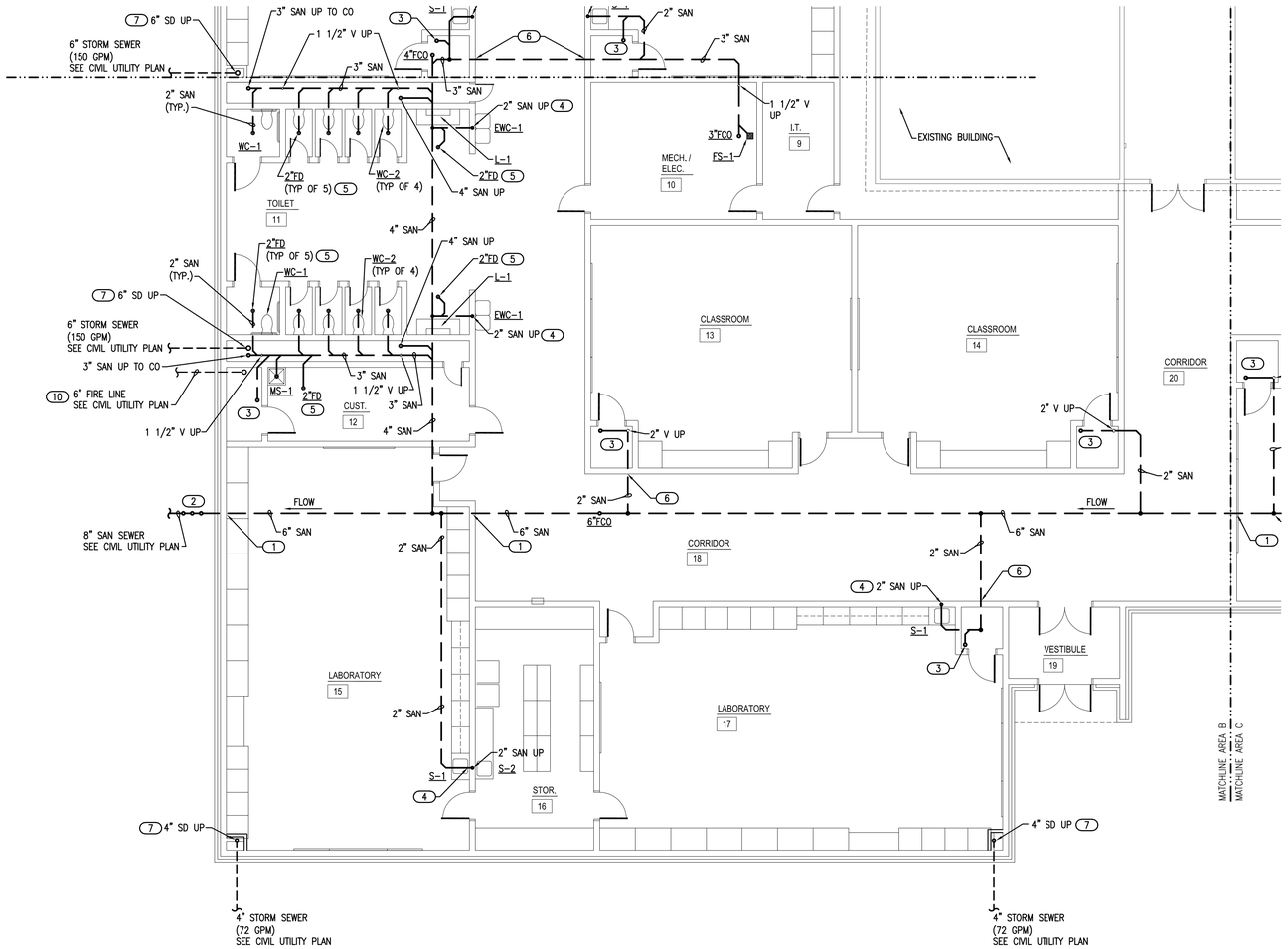

1 PLUMBING PLAN - BELOW GRADE - AREA B

SCALE: 1/8" = 1'-0"

NORTH

GENERAL NOTES

1. COORDINATE WORK WITH ALL OTHER TRADES ON SITE.
2. COORDINATE ALL BELOW GRADE PIPE ROUTING WITH STRUCTURAL FOUNDATIONS AND REQUIRED PIPE SLEEVES THRU FOUNDATION PENETRATIONS.
3. FIELD VERIFY EXISTING CONDITIONS PRIOR TO COMMENCING WORK.
4. PRIOR TO COMMENCING WORK, COORDINATE WITH SITE CONTRACTOR FOR SANITARY SEWER AND WATER INVERT ELEVATIONS.
5. REFER TO PLUMBING FIXTURE SCHEDULE ON SHEET P601 FOR FIXTURE ROUGH-IN PIPE SIZES.
6. PIPE TRENCHES SHALL HAVE SAND BEDDING TO A MINIMUM POINT 6" ABOVE THE TOP OF PIPE. REFER TO SPECIFICATION SECTION 22 05 00.
7. INSTALL BELOW FLOOR 1/2" CW LINE TYPE K COPPER OR PEX-a FOR TRAP PRIMER TO FLOOR DRAINS. SLOPE LINE CONTINUOUSLY TOWARDS DRAIN. SEE DETAIL 1/P501.

KEYED NOTES

1. PROVIDE CAST IRON PIPE SLEEVE FOR SANITARY PIPE BELOW GRADE BEAM. INSTALL FOAM SPACER BLOCKS TO MAINTAIN PIPE IN CENTER OF SLEEVE. COORDINATE PIPE SLEEVE INSTALLATION WITH STRUCTURAL.
2. INSTALL 4" SANITARY BACKWATER VALVE AND 4" EXTERIOR CLEANOUTS. PROVIDE CONCRETE PAD AT GRADE. SEE DETAIL 4/P501.
3. ROUTE 2" SANITARY LINE UP TO 2" AFF AND INSTALL 2x4 FITTING FOR HUB DRAIN. COORDINATE INSTALLATION WITH MC. ROUTE TRAP PRIMER LINE TO HUB DRAIN. MC TO ROUTE FURNACE CONDENSATE DRAIN LINES TO HUB DRAIN. SEE DETAIL1/P501.
4. COORDINATE WITH STRUCTURAL FOR ROUTING SANITARY UP TO ABOVE GRADE BEAM AND UP INTO WALL ABOVE.
5. INSTALL BELOW FLOOR 1/2" CW LINE TYPE K COPPER OR PEX-a FOR TRAP PRIMER TO FLOOR DRAIN. SLOPE LINE CONTINUOUSLY TOWARDS DRAIN. SEE DETAIL 1/P501.
6. PROVIDE CAST IRON PIPE SLEEVE FOR SANITARY PIPE THRU GRADE BEAM. INSTALL FOAM SPACER BLOCKS TO MAINTAIN PIPE IN CENTER OF SLEEVE. COORDINATE PIPE SLEEVE INSTALLATION WITH STRUCTURAL.
7. PROVIDE CAST IRON PIPE SLEEVE FOR STORM PIPE THRU OR BELOW GRADE BEAM. INSTALL FOAM SPACER BLOCKS TO MAINTAIN PIPE IN CENTER OF SLEEVE. COORDINATE PIPE SLEEVE INSTALLATION WITH STRUCTURAL.
8. CONNECT NEW 4" SANITARY LINE TO EXISTING SANITARY LINE. INSTALL 4" FLOOR CLEANOUT. FIELD VERIFY INVERT ELEVATION OF EXISTING SANITARY LINE.
9. CONNECT NEW 3" SANITARY LINE TO EXISTING 2" SANITARY LINE. INSTALL 3" FLOOR CLEANOUT. FIELD VERIFY INVERT ELEVATION OF EXISTING SANITARY LINE.
10. PROVIDE CAST IRON PIPE SLEEVE FOR FIRE LINE THRU OR BELOW GRADE BEAM. INSTALL FOAM SPACER BLOCKS TO MAINTAIN PIPE IN CENTER OF SLEEVE. COORDINATE PIPE SLEEVE INSTALLATION WITH STRUCTURAL. COORDINATE INVERT ELEVATION WITH SITE CONTRACTOR.

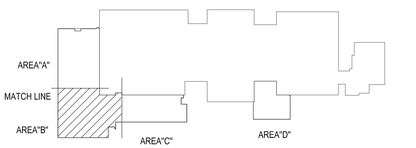

KEY PLAN

NORTH

AGP
the Abla Griffin Partnership L.L.C.
201 N. BROADWAY
SUITE 210
MOORE, OK. 73160
405.735.3477
AGP@theAGP.net
www.theAGP.net

CEDAR CREEK
CIVIL

KFC ENGINEERING
STRUCTURAL

SALAS O'BRIEN
MECHANICAL / ELECTRICAL

LICENSED PROFESSIONAL ENGINEER
Dwayne McDonald Goodwin
#30822
10/03/2023

KC
drawn by

KP
checked by

JULY 2023
date

revisions

MOORE PUBLIC SCHOOLS
BOARD OF EDUCATION
MOORE, OKLAHOMA

MOORE Public Schools
LEARNING FOR LIFE

CLASSROOM ADDITION
HIGHLAND WEST
JUNIOR HIGH SCHOOL

sheet no:

P102

Salas O'Brien
2600 Van Buren St., Suite 2635
Norman, OK 73072
Salas O'Brien Registration: CA# 7058
Expiration Date : 6/30/2025
Salas O'Brien Project Number: 2023-02792-00

OWNERSHIP USE OF DOCUMENTS:

AGP EXPRESSLY RESERVES ITS COPYRIGHT AND OTHER PROPERTY RIGHTS OF ALL PLANS AND DRAWINGS DESIGNED AND/OR PRODUCED. PLANS AND DRAWINGS ARE NOT TO BE REPRODUCED IN ANY FORM OR MANNER WITHOUT THE EXPRESSED WRITTEN CONSENT OF AGP.

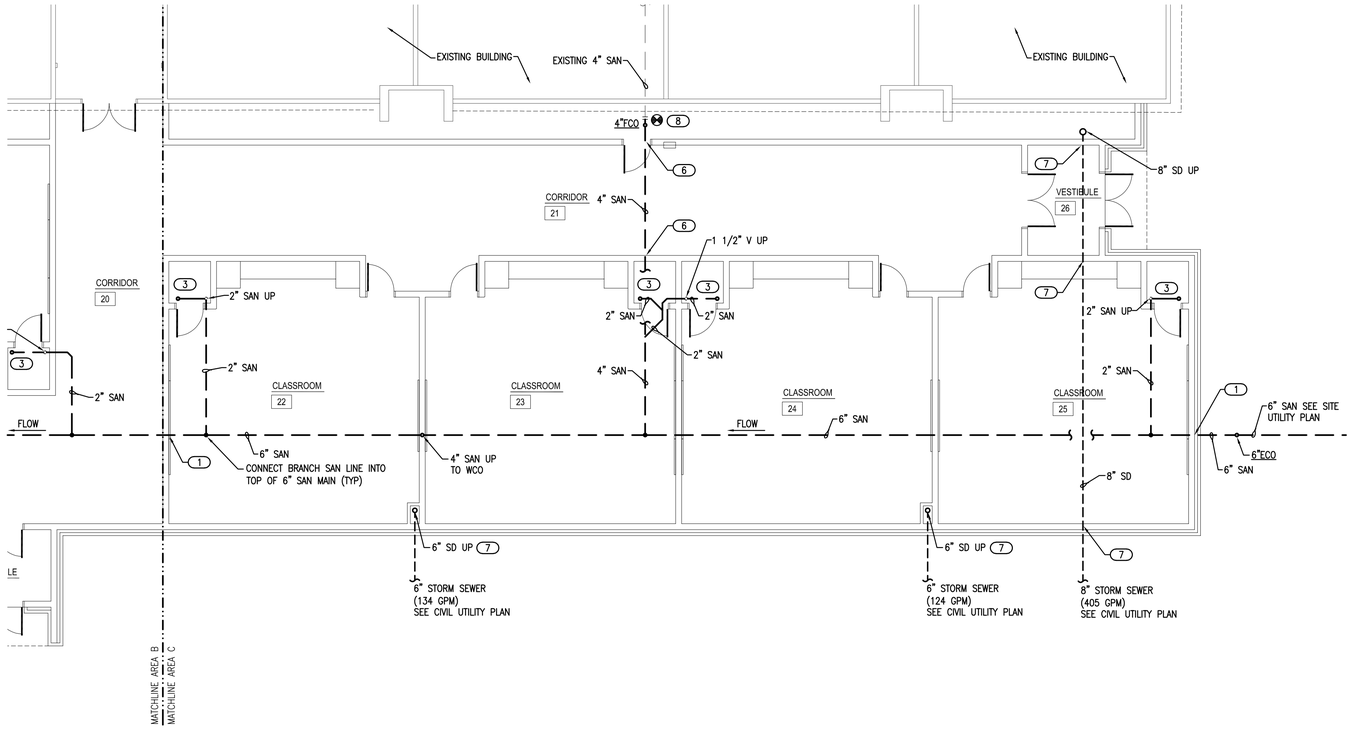

1 PLUMBING PLAN - BELOW GRADE - AREA C

SCALE: 1/8" = 1'-0"

NORTH

GENERAL NOTES

1. COORDINATE WORK WITH ALL OTHER TRADES ON SITE.
2. COORDINATE ALL BELOW GRADE PIPE ROUTING WITH STRUCTURAL FOUNDATIONS AND REQUIRED PIPE SLEEVES THRU FOUNDATION PENETRATIONS.
3. FIELD VERIFY EXISTING CONDITIONS PRIOR TO COMMENCING WORK.
4. PRIOR TO COMMENCING WORK, COORDINATE WITH SITE CONTRACTOR FOR SANITARY SEWER AND WATER INVERT ELEVATIONS.
5. REFER TO PLUMBING FIXTURE SCHEDULE ON SHEET P601 FOR FIXTURE ROUGH-IN PIPE SIZES.
6. PIPE TRENCHES SHALL HAVE SAND BEDDING TO A MINIMUM POINT 6" ABOVE THE TOP OF PIPE. REFER TO SPECIFICATION SECTION 22 05 00.
7. INSTALL BELOW FLOOR 1/2" CW LINE TYPE K COPPER OR PEX-a FOR TRAP PRIMER TO FLOOR DRAINS. SLOPE LINE CONTINUOUSLY TOWARDS DRAIN. SEE DETAIL 1/P501.

KEYED NOTES

1. PROVIDE CAST IRON PIPE SLEEVE FOR SANITARY PIPE BELOW GRADE BEAM. INSTALL FOAM SPACER BLOCKS TO MAINTAIN PIPE IN CENTER OF SLEEVE. COORDINATE PIPE SLEEVE INSTALLATION WITH STRUCTURAL.
2. INSTALL 4" SANITARY BACKWATER VALVE AND 4" EXTERIOR CLEANOUTS. PROVIDE CONCRETE PAD AT GRADE. SEE DETAIL 4/P501.
3. ROUTE 2" SANITARY LINE UP TO 2" AFF AND INSTALL 2x4 FITTING FOR HUB DRAIN. COORDINATE INSTALLATION WITH MC. ROUTE TRAP PRIMER LINE TO HUB DRAIN. MC TO ROUTE FURNACE CONDENSATE DRAIN LINES TO HUB DRAIN. SEE DETAIL1/P501.
4. COORDINATE WITH STRUCTURAL FOR ROUTING SANITARY UP TO ABOVE GRADE BEAM AND UP INTO WALL ABOVE.
5. INSTALL BELOW FLOOR 1/2" CW LINE TYPE K COPPER OR PEX-a FOR TRAP PRIMER TO FLOOR DRAIN. SLOPE LINE CONTINUOUSLY TOWARDS DRAIN. SEE DETAIL 1/P501.
6. PROVIDE CAST IRON PIPE SLEEVE FOR SANITARY PIPE THRU GRADE BEAM. INSTALL FOAM SPACER BLOCKS TO MAINTAIN PIPE IN CENTER OF SLEEVE. COORDINATE PIPE SLEEVE INSTALLATION WITH STRUCTURAL.
7. PROVIDE CAST IRON PIPE SLEEVE FOR STORM PIPE THRU OR BELOW GRADE BEAM. INSTALL FOAM SPACER BLOCKS TO MAINTAIN PIPE IN CENTER OF SLEEVE. COORDINATE PIPE SLEEVE INSTALLATION WITH STRUCTURAL.
8. CONNECT NEW 4" SANITARY LINE TO EXISTING SANITARY LINE. INSTALL 4" FLOOR CLEANOUT. FIELD VERIFY INVERT ELEVATION OF EXISTING SANITARY LINE.
9. CONNECT NEW 3" SANITARY LINE TO EXISTING 2" SANITARY LINE. INSTALL 3" FLOOR CLEANOUT. FIELD VERIFY INVERT ELEVATION OF EXISTING SANITARY LINE.
10. PROVIDE CAST IRON PIPE SLEEVE FOR FIRE LINE THRU OR BELOW GRADE BEAM. INSTALL FOAM SPACER BLOCKS TO MAINTAIN PIPE IN CENTER OF SLEEVE. COORDINATE PIPE SLEEVE INSTALLATION WITH STRUCTURAL. COORDINATE INVERT ELEVATION WITH SITE CONTRACTOR.

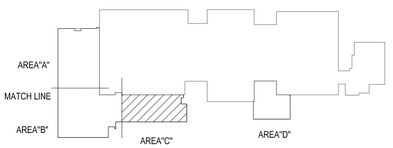

KEY PLAN

NORTH

AGP
the Abla Griffin Partnership L.L.C.
201 N. BROADWAY
SUITE 210
MOORE, OK. 73160
405.735.3477
AGP@theAGP.net
www.theAGP.net

CEDAR CREEK
CIVIL

KFC ENGINEERING
STRUCTURAL

SALAS O'BRIEN
MECHANICAL / ELECTRICAL

LICENSED PROFESSIONAL ENGINEER
Dwayne McDonald
#30822
10/03/23

KC
drawn by

KP
checked by

JULY 2023
date

revisions

MOORE PUBLIC SCHOOLS
BOARD OF EDUCATION
MOORE, OKLAHOMA

MOORE Public Schools
LEARNING FOR LIFE

CLASSROOM ADDITION
HIGHLAND WEST
JUNIOR HIGH SCHOOL

sheet no:

P103

Salas O'Brien
2600 Van Buren St., Suite 2635
Norman, OK 73072
Salas O'Brien Registration: CA# 7058
Expiration Date : 6/30/2025
Salas O'Brien Project Number: 2023-02792-00

OWNERSHIP USE OF DOCUMENTS:

AGP EXPRESSLY RESERVES ITS COPYRIGHT AND OTHER PROPERTY RIGHTS OF ALL PLANS AND DRAWINGS DESIGNED AND/OR PRODUCED. PLANS AND DRAWINGS ARE NOT TO BE REPRODUCED IN ANY FORM OR MANNER WITHOUT THE EXPRESSED WRITTEN CONSENT OF AGP.

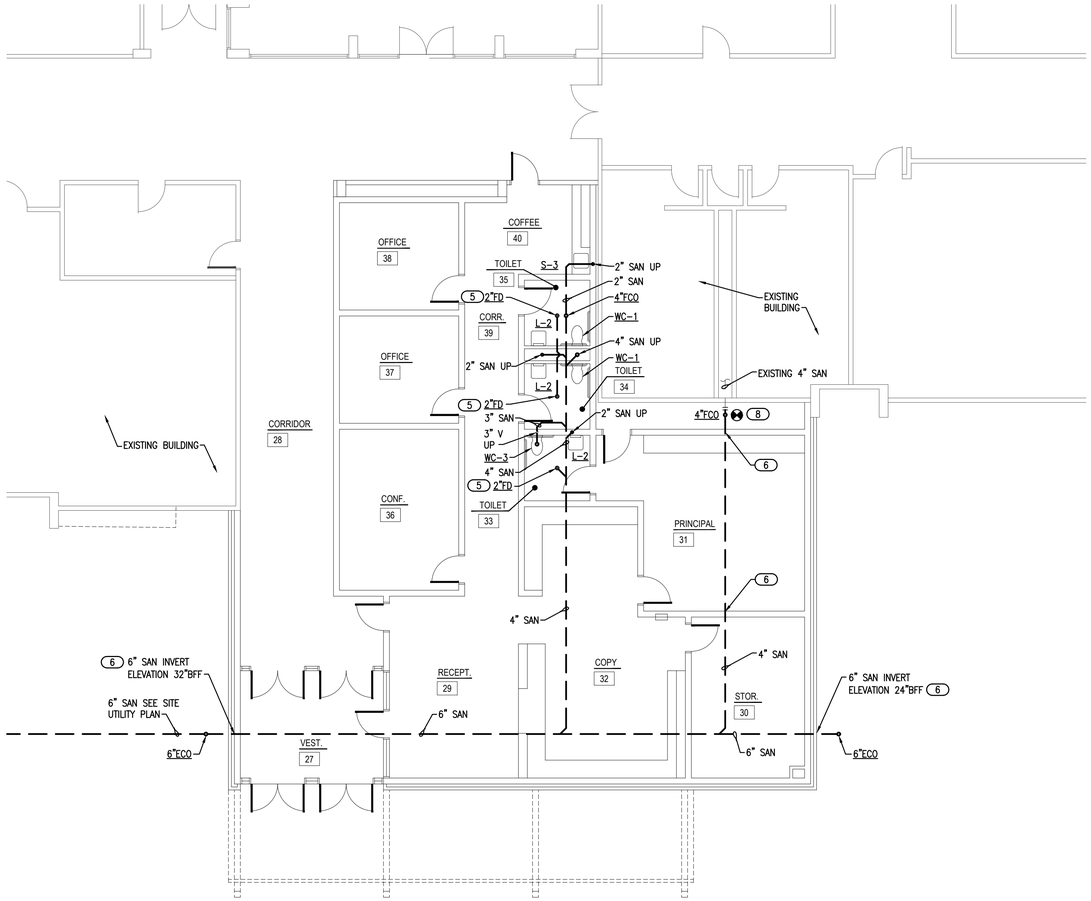

1 PLUMBING PLAN - BELOW GRADE - AREA D

SCALE: 1/8" = 1'-0"

NORTH

GENERAL NOTES

1. COORDINATE WORK WITH ALL OTHER TRADES ON SITE.
2. COORDINATE ALL BELOW GRADE PIPE ROUTING WITH STRUCTURAL FOUNDATIONS AND REQUIRED PIPE SLEEVES THRU FOUNDATION PENETRATIONS.
3. FIELD VERIFY EXISTING CONDITIONS PRIOR TO COMMENCING WORK.
4. PRIOR TO COMMENCING WORK, COORDINATE WITH SITE CONTRACTOR FOR SANITARY SEWER AND WATER INVERT ELEVATIONS.
5. REFER TO PLUMBING FIXTURE SCHEDULE ON SHEET P601 FOR FIXTURE ROUGH-IN PIPE SIZES.
6. PIPE TRENCHES SHALL HAVE SAND BEDDING TO A MINIMUM POINT 6" ABOVE THE TOP OF PIPE. REFER TO SPECIFICATION SECTION 22 05 00.
7. INSTALL BELOW FLOOR 1/2" CW LINE TYPE K COPPER OR PEX-a FOR TRAP PRIMER TO FLOOR DRAINS. SLOPE LINE CONTINUOUSLY TOWARDS DRAIN. SEE DETAIL 1/P501.

KEYED NOTES

1. PROVIDE CAST IRON PIPE SLEEVE FOR SANITARY PIPE BELOW GRADE BEAM. INSTALL FOAM SPACER BLOCKS TO MAINTAIN PIPE IN CENTER OF SLEEVE. COORDINATE PIPE SLEEVE INSTALLATION WITH STRUCTURAL.
2. INSTALL 4" SANITARY BACKWATER VALVE AND 4" EXTERIOR CLEANOUTS. PROVIDE CONCRETE PAD AT GRADE. SEE DETAIL 4/P501.
3. ROUTE 2" SANITARY LINE UP TO 2" AFF AND INSTALL 2x4 FITTING FOR HUB DRAIN. COORDINATE INSTALLATION WITH MC. ROUTE TRAP PRIMER LINE TO HUB DRAIN. MC TO ROUTE FURNACE CONDENSATE DRAIN LINES TO HUB DRAIN. SEE DETAIL1/P501.
4. COORDINATE WITH STRUCTURAL FOR ROUTING SANITARY UP TO ABOVE GRADE BEAM AND UP INTO WALL ABOVE.
5. INSTALL BELOW FLOOR 1/2" CW LINE TYPE K COPPER OR PEX-a FOR TRAP PRIMER TO FLOOR DRAIN. SLOPE LINE CONTINUOUSLY TOWARDS DRAIN. SEE DETAIL 1/P501.
6. PROVIDE CAST IRON PIPE SLEEVE FOR SANITARY PIPE THRU GRADE BEAM. INSTALL FOAM SPACER BLOCKS TO MAINTAIN PIPE IN CENTER OF SLEEVE. COORDINATE PIPE SLEEVE INSTALLATION WITH STRUCTURAL.
7. PROVIDE CAST IRON PIPE SLEEVE FOR STORM PIPE THRU OR BELOW GRADE BEAM. INSTALL FOAM SPACER BLOCKS TO MAINTAIN PIPE IN CENTER OF SLEEVE. COORDINATE PIPE SLEEVE INSTALLATION WITH STRUCTURAL.
8. CONNECT NEW 4" SANITARY LINE TO EXISTING SANITARY LINE. INSTALL 4" FLOOR CLEANOUT. FIELD VERIFY INVERT ELEVATION OF EXISTING SANITARY LINE.
9. CONNECT NEW 3" SANITARY LINE TO EXISTING 2" SANITARY LINE. INSTALL 3" FLOOR CLEANOUT. FIELD VERIFY INVERT ELEVATION OF EXISTING SANITARY LINE.
10. PROVIDE CAST IRON PIPE SLEEVE FOR FIRE LINE THRU OR BELOW GRADE BEAM. INSTALL FOAM SPACER BLOCKS TO MAINTAIN PIPE IN CENTER OF SLEEVE. COORDINATE PIPE SLEEVE INSTALLATION WITH STRUCTURAL. COORDINATE INVERT ELEVATION WITH SITE CONTRACTOR.

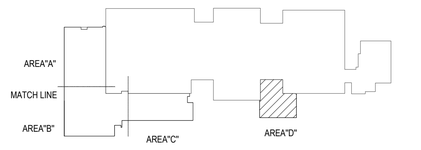

KEY PLAN

NORTH

AGP
the Abla Griffin Partnership L.L.C.
201 N. BROADWAY
SUITE 210
MOORE, OK. 73160
405.735.3477
AGP@theAGP.net
www.theAGP.net

CEDAR CREEK
CIVIL

KFC ENGINEERING
STRUCTURAL

SALAS O'BRIEN
MECHANICAL / ELECTRICAL

STATE OF OKLAHOMA PROFESSIONAL ENGINEER
Wayne M. McDonald
30372
05/18/23

KC
drawn by

KP
checked by

JULY 2023
date

revisions

MOORE PUBLIC SCHOOLS
BOARD OF EDUCATION
MOORE, OKLAHOMA

MOORE Public Schools
LEARNING FOR LIFE

CLASSROOM ADDITION
HIGHLAND WEST
JUNIOR HIGH SCHOOL

sheet no:

P104

Salas O'Brien
2600 Van Buren St., Suite 2635
Norman, OK 73072
Salas O'Brien Registration: CA# 7058
Expiration Date : 6/30/2025
Salas O'Brien Project Number: 2023-02792-00

OWNERSHIP USE OF DOCUMENTS:

AGP EXPRESSLY RESERVES ITS COPYRIGHT AND OTHER PROPERTY RIGHTS OF ALL PLANS AND DRAWINGS DESIGNED AND/OR PRODUCED. PLANS AND DRAWINGS ARE NOT TO BE REPRODUCED IN ANY FORM OR MANNER WITHOUT THE EXPRESSED WRITTEN CONSENT OF AGP.

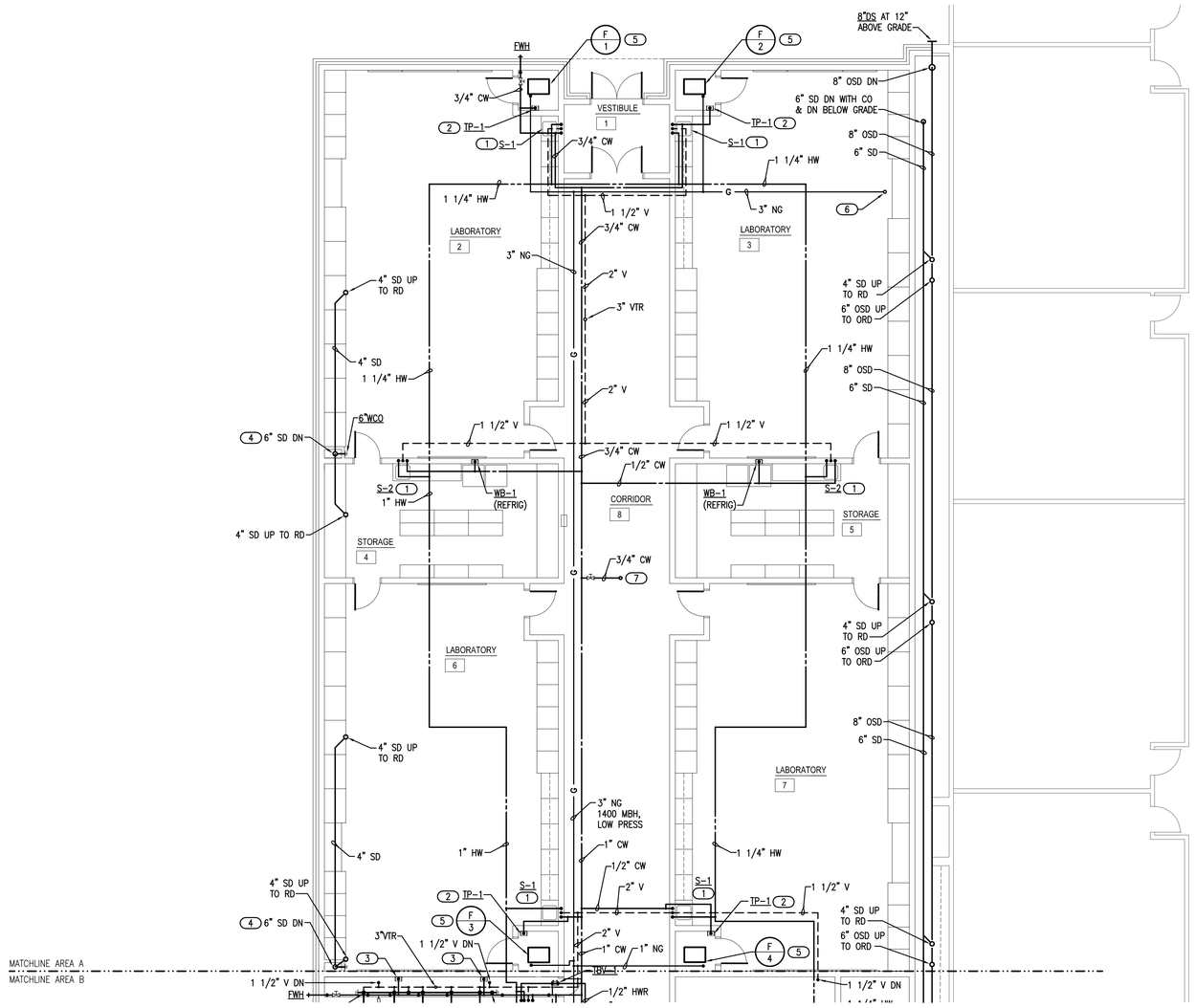

1 PLUMBING PLAN - ABOVE - AREA A

SCALE: 1/8" = 1'-0"

NORTH

GENERAL NOTES

1. COORDINATE WORK WITH ALL OTHER TRADES ON SITE.
2. PROVIDE WATER HAMMER ARRESTORS (HA) ON WATER LINES TO FLUSH VALVES, SENSOR FAUCETS AND QUICK CLOSING VALVES. LOCATE UNITS IN ACCESSIBLE LOCATIONS.
3. SINK AND LAVATORY WATER SUPPLY STUB OUTS SHALL BE COPPER PIPE WITH SUPPORT BRACKET FASTENED IN WALL CAVITY.
4. FIRE SEAL ALL PENETRATIONS THRU RATED STRUCTURES TO MAINTAIN FIRE RATING.
5. REFER TO PLUMBING FIXTURE SCHEDULE ON SHEET P601 FOR FIXTURE ROUGH-IN PIPE SIZES.
6. PROVIDE ACCESS PANELS FOR ALL VALVES/DEVICES ABOVE HARD CEILINGS AND BEHIND WALLS.
7. ALL GAS PIPE SHALL COMPLY WITH IFGC. BRANCH LINES SHALL TAP OFF TOP OF GAS MAINS AND INSTALL SHUT-OFF VALVE ON BRANCH LINE.
8. TRAP PRIMER LINES SHALL BE COPPER TYPE "K" OR PEX-a TUBING WITH CONTINUOUS SLOPE TOWARDS DRAIN CONNECTION.
9. COORDINATE HEIGHT OF EXTERIOR FREEZELESS WALL HYDRANT (FWH) WITH GC AND/OR ARCHITECT. SEAL FIXTURE FLANGE WATERTIGHT.
10. INSULATE STORM DRAIN AND SLOPE DOWN AT 1/8" PER FOOT.

KEYED NOTES

1. INSTALL THERMOSTATIC MIXING VALVE (TMV-1) BELOW SINK. CLASSROOM SINKS SEE DETAIL 8/P501. STORAGE ROOM SINKS SEE DETAIL 5/P501.
2. PROVIDE 1/2" CW WITH STRAINER TO TRAP PRIMER (TP-1) IN ACCESSIBLE LOCATION IN FURNACE CLOSET. ROUTE 1/2" LINE FROM UNIT TO HUB DRAIN. COORDINATE POWER WITH EC. SEE DETAIL 1/P501.
3. PROVIDE 1/2" CW WITH STRAINER TO TRAP PRIMER (TP-1) IN ACCESSIBLE LOCATION ON WALL IN PLUMBING CHASE. ROUTE (3) 1/2" LINES FROM DISTRIBUTION UNIT TO FLOOR DRAINS IN THIS AREA. SEE DETAIL 1/P501.
4. COORDINATE CHASE SIZE WITH GC FOR STORM DRAIN PIPE. INSTALL FLOOR PIPE SUPPORT FOR ELBOW. INSTALL BOTTOM OF DOWNSPOUT NOZZLE AT 8" ABOVE GRADE. COORDINATE HEIGHT WITH GC.
5. ROUTE 1" NATURAL GAS (LOW PRESSURE) LINE TO FURNACE. PROVIDE BALL VALVE, DRIP LEG, AND FINAL UNIT CONNECTION. COORDINATE CONNECTION WITH MC. SEE DETAIL 7/P501.
6. ROUTE 3" NATURAL GAS LINE UP THRU ROOF.
7. PROVIDE 3/4" CW WITH BALL VALVE TO CONNECTION FOR ROOF HYDRANT (FRH).

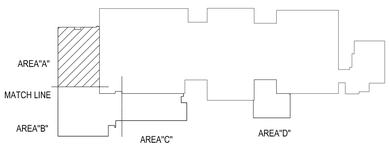

KEY PLAN

NORTH

AGP
the Abla Griffin Partnership L.L.C.
201 N. BROADWAY
SUITE 210
MOORE, OK. 73160
405.735.3477
AGP@theAGP.net
www.theAGP.net

CEDAR CREEK
CIVIL

KFC ENGINEERING
STRUCTURAL

SALAS O'BRIEN
MECHANICAL / ELECTRICAL

LICENSED PROFESSIONAL ENGINEER
Dwaine McDonald
#30822
10/03/23

KC
drawn by

KP
checked by

JULY 2023
date

revisions

MOORE PUBLIC SCHOOLS
BOARD OF EDUCATION
MOORE, OKLAHOMA

MOORE Public Schools
LEARNING FOR LIFE

CLASSROOM ADDITION
HIGHLAND WEST
JUNIOR HIGH SCHOOL

sheet no:

P110

Salas O'Brien
2600 Van Buren St., Suite 2635
Norman, OK 73072
Salas O'Brien Registration: CA# 7058
Expiration Date : 6/30/2025
Salas O'Brien Project Number: 2023-02792-00

OWNERSHIP USE OF DOCUMENTS:

AGP EXPRESSLY RESERVES ITS COPYRIGHT AND OTHER PROPERTY RIGHTS OF ALL PLANS AND DRAWINGS DESIGNED AND/OR PRODUCED. PLANS AND DRAWINGS ARE NOT TO BE REPRODUCED IN ANY FORM OR MANNER WITHOUT THE EXPRESSED WRITTEN CONSENT OF AGP.

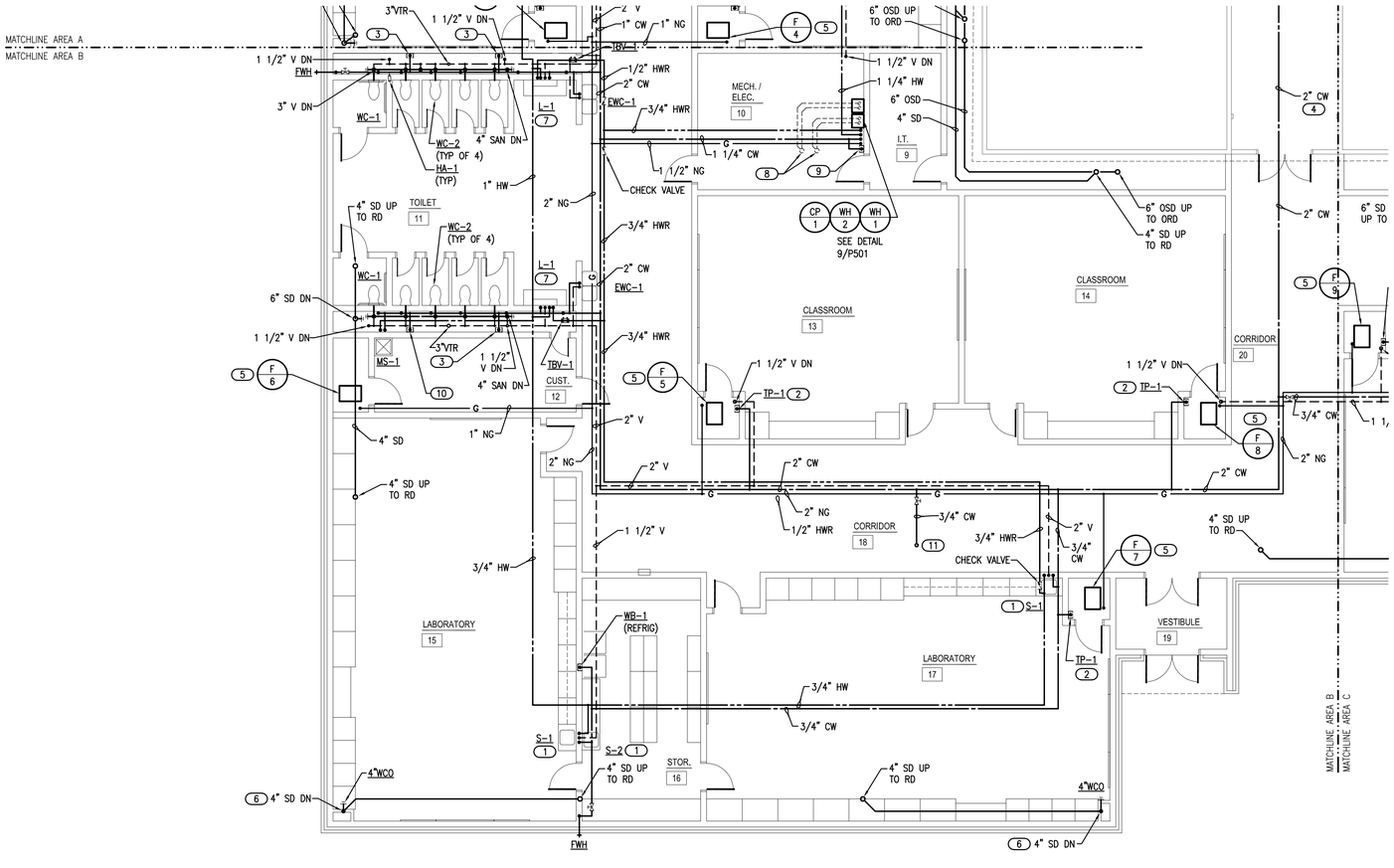

1 PLUMBING PLAN - ABOVE GRADE - AREA B

SCALE: 1/8" = 1'-0"

NORTH

GENERAL NOTES

1. COORDINATE WORK WITH ALL OTHER TRADES ON SITE.
2. PROVIDE WATER HAMMER ARRESTORS (HA) ON WATER LINES TO FLUSH VALVES, SENSOR FAUCETS AND QUICK CLOSING VALVES. LOCATE UNITS IN ACCESSIBLE LOCATIONS.
3. SINK AND LAVATORY WATER SUPPLY STUB OUTS SHALL BE COPPER PIPE WITH SUPPORT BRACKET FASTENED IN WALL CAVITY.
4. FIRE SEAL ALL PENETRATIONS THRU RATED STRUCTURES TO MAINTAIN FIRE RATING.
5. REFER TO PLUMBING FIXTURE SCHEDULE ON SHEET P601 FOR FIXTURE ROUGH-IN PIPE SIZES.
6. PROVIDE ACCESS PANELS FOR ALL VALVES/DEVICES ABOVE HARD CEILINGS AND BEHIND WALLS.
7. ALL GAS PIPE SHALL COMPLY WITH IFGC. BRANCH LINES SHALL TAP OFF TOP OF GAS MAINS AND INSTALL SHUT-OFF VALVE ON BRANCH LINE.
8. TRAP PRIMER LINES SHALL BE COPPER TYPE "K" OR PEX-a TUBING WITH CONTINUOUS SLOPE TOWARDS DRAIN CONNECTION.
9. COORDINATE HEIGHT OF EXTERIOR FREEZELESS WALL HYDRANT (FWH) WITH GC AND/OR ARCHITECT. SEAL FIXTURE FLANGE WATERTIGHT.
10. INSULATE STORM DRAIN AND SLOPE DOWN AT 1/8" PER FOOT.

KEYED NOTES

1. INSTALL THERMOSTATIC MIXING VALVE (TMV-1) BELOW SINK. CLASSROOM SINKS SEE DETAIL 8/P501. STORAGE ROOM SINKS SEE DETAIL 5/P501.
2. PROVIDE 1/2" CW WITH STRAINER TO TRAP PRIMER (TP-1) IN ACCESSIBLE LOCATION IN FURNACE CLOSET. ROUTE 1/2" LINE FROM UNIT TO HUB DRAIN. COORDINATE POWER WITH EC. SEE DETAIL 1/P501.
3. PROVIDE 1/2" CW WITH STRAINER TO TRAP PRIMER (TP-1) IN ACCESSIBLE LOCATION ON WALL IN PLUMBING CHASE. ROUTE (3) 1/2" LINES FROM DISTRIBUTION UNIT TO FLOOR DRAINS IN THIS AREA. SEE DETAIL 1/P501.
4. COORDINATE WITH GC FOR CEILING REMOVAL AND REPLACEMENT FOR INSTALLING NEW COLD WATER MAIN THRU EXISTING BUILDING TO NEW ADDITION.
5. ROUTE 1" NATURAL GAS (LOW PRESSURE) LINE TO FURNACE. PROVIDE BALL VALVE, DRIP LEG, AND FINAL UNIT CONNECTION. COORDINATE CONNECTION WITH MC. SEE DETAIL 7/P501.
6. COORDINATE CHASE SIZE WITH GC FOR STORM DRAIN PIPE. INSTALL FLOOR PIPE SUPPORT FOR ELBOW. INSTALL BOTTOM OF DOWNSPOUT NOZZLE AT 8" ABOVE GRADE. COORDINATE HEIGHT WITH GC.
7. INSTALL THERMOSTATIC MIXING VALVE (TMV-1) BELOW LAVATORY L-1. ROUTE 1/2" HWR LINE FROM FIXTURE WITH THERMOSTATIC BALANCING VALVE (TBV-1) PRIOR TO CONNECTION TO HWR MAIN SEE DETAIL 6/P501.
8. WATER HEATER 3" CONCENTRIC VENT UP THRU ROOF.
9. PROVIDE 1/2" CW WITH STRAINER TO TRAP PRIMER (TP-1) IN ACCESSIBLE LOCATION ON WALL. ROUTE 1/2" LINE FROM UNIT TO FLOOR FLOOR SINK IN THIS AREA. SEE DETAIL 1/P501.
10. PROVIDE 1/2" CW WITH STRAINER TO TRAP PRIMER (TP-1) IN ACCESSIBLE LOCATION ON WALL IN PLUMBING CHASE. ROUTE (4) 1/2" LINES FROM DISTRIBUTION UNIT TO (3) FLOOR DRAINS AND HUB DRAIN IN THIS AREA. SEE DETAIL 1/P501.
11. PROVIDE 3/4" CW WITH BALL VALVE TO CONNECTION FOR ROOF HYDRANT (FRH).

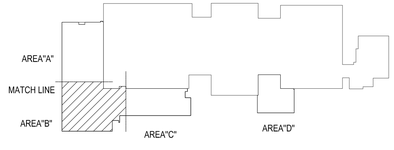

KEY PLAN

NORTH

AGP
the Abla Griffin Partnership L.L.C.
201 N. BROADWAY
SUITE 210
MOORE, OK. 73160
405.735.3477
AGP@theAGP.net
www.theAGP.net

CEDAR CREEK
CIVIL

KFC ENGINEERING
STRUCTURAL

SALAS O'BRIEN
MECHANICAL / ELECTRICAL

REGISTERED PROFESSIONAL ENGINEER
Dwayne McDonald
13082
10/03/2023

KC
drawn by

KP
checked by

JULY 2023
date

revisions

MOORE PUBLIC SCHOOLS
BOARD OF EDUCATION
MOORE, OKLAHOMA

MOORE Public Schools
LEARNING FOR LIFE

CLASSROOM ADDITION
HIGHLAND WEST
JUNIOR HIGH SCHOOL

sheet no:

P111

Salas O'Brien
2600 Van Buren St., Suite 2635
Norman, OK 73072
Salas O'Brien Registration: CA# 7058
Expiration Date : 6/30/2025
Salas O'Brien Project Number: 2023-02792-00

OWNERSHIP USE OF DOCUMENTS:

AGP EXPRESSLY RESERVES ITS COPYRIGHT AND OTHER PROPERTY RIGHTS OF ALL PLANS AND DRAWINGS DESIGNED AND/OR PRODUCED. PLANS AND DRAWINGS ARE NOT TO BE REPRODUCED IN ANY FORM OR MANNER WITHOUT THE EXPRESSED WRITTEN CONSENT OF AGP.

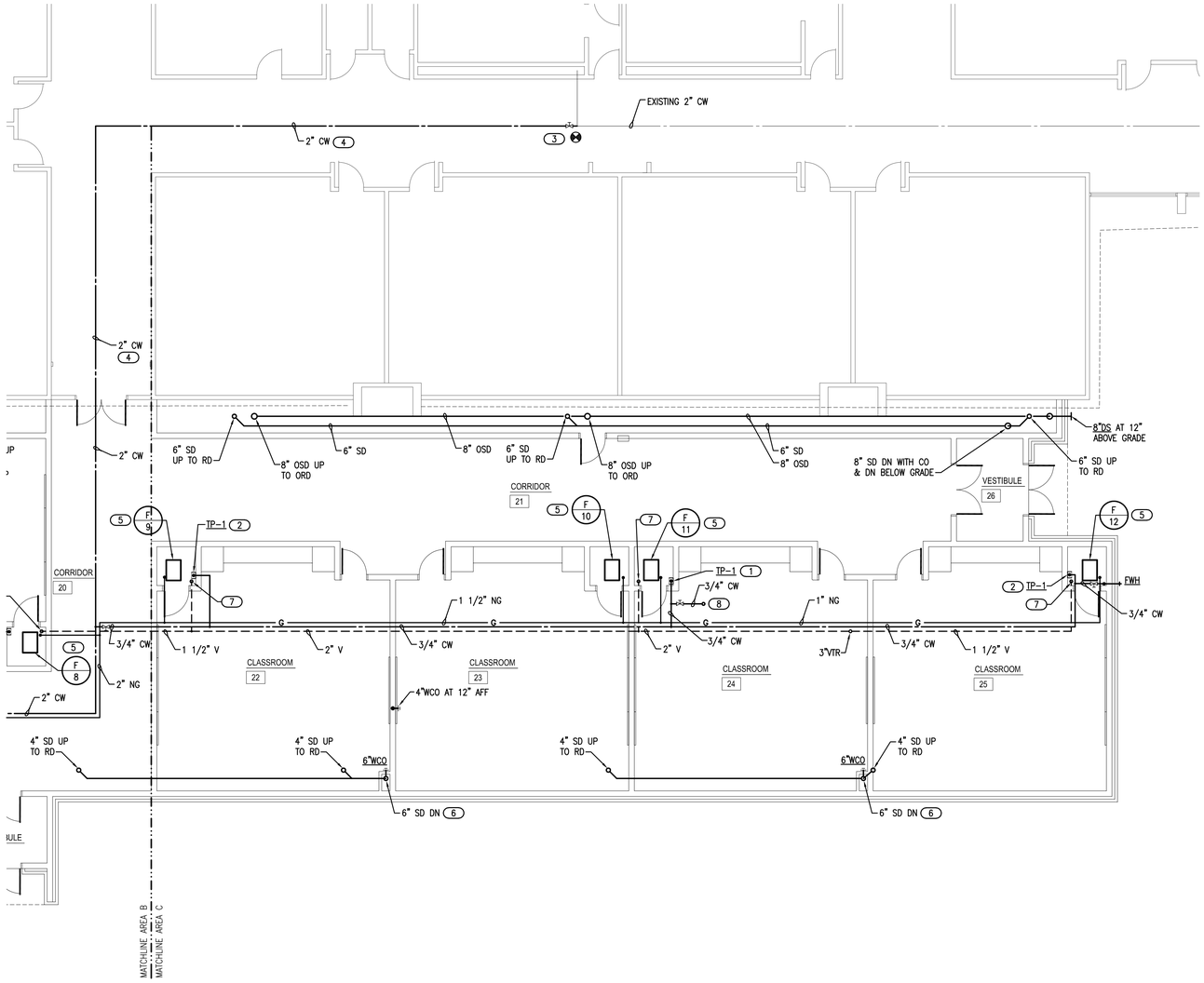

1 PLUMBING PLAN - ABOVE GRADE - AREA C

SCALE: 1/8" = 1'-0"

NORTH

GENERAL NOTES

1. COORDINATE WORK WITH ALL OTHER TRADES ON SITE.
2. PROVIDE WATER HAMMER ARRESTORS (HA) ON WATER LINES TO FLUSH VALVES, SENSOR FAUCETS AND QUICK CLOSING VALVES. LOCATE UNITS IN ACCESSIBLE LOCATIONS.
3. SINK AND LAVATORY WATER SUPPLY STUB OUTS SHALL BE COPPER PIPE WITH SUPPORT BRACKET FASTENED IN WALL CAVITY.
4. FIRE SEAL ALL PENETRATIONS THRU RATED STRUCTURES TO MAINTAIN FIRE RATING.
5. REFER TO PLUMBING FIXTURE SCHEDULE ON SHEET P601 FOR FIXTURE ROUGH-IN PIPE SIZES.
6. PROVIDE ACCESS PANELS FOR ALL VALVES/DEVICES ABOVE HARD CEILINGS AND BEHIND WALLS.
7. ALL GAS PIPE SHALL COMPLY WITH IFGC. BRANCH LINES SHALL TAP OFF TOP OF GAS MAINS AND INSTALL SHUT-OFF VALVE ON BRANCH LINE.
8. TRAP PRIMER LINES SHALL BE COPPER TYPE "K" OR PEX-a TUBING WITH CONTINUOUS SLOPE TOWARDS DRAIN CONNECTION.
9. COORDINATE HEIGHT OF EXTERIOR FREEZELESS WALL HYDRANT (FWH) WITH GC AND/OR ARCHITECT. SEAL FIXTURE FLANGE WATERTIGHT.
10. INSULATE STORM DRAIN AND SLOPE DOWN AT 1/8" PER FOOT.

KEYED NOTES

1. PROVIDE 1/2" CW WITH STRAINER TO TRAP PRIMER (TP-1) IN ACCESSIBLE LOCATION IN FURNACE CLOSET. ROUTE (2) 1/2" LINES FROM DISTRIBUTION UNIT TO HUB DRAINS IN THIS AREA. COORDINATE POWER WITH EC. SEE DETAIL 1/P501.
2. PROVIDE 1/2" CW WITH STRAINER TO TRAP PRIMER (TP-1) IN ACCESSIBLE LOCATION IN FURNACE CLOSET. ROUTE 1/2" LINE FROM UNIT TO HUB DRAIN. COORDINATE POWER WITH EC. SEE DETAIL 1/P501.
3. CONNECT 2" CW WITH BALL VALVE TO EXISTING CW LINE.
4. COORDINATE WITH GC FOR CEILING REMOVAL AND REPLACEMENT FOR INSTALLING NEW 2" COLD WATER MAIN THRU EXISTING BUILDING TO NEW ADDITION.
5. ROUTE 1" NATURAL GAS (LOW PRESSURE) LINE TO FURNACE. PROVIDE BALL VALVE, DRIP LEG, AND FINAL UNIT CONNECTION. COORDINATE CONNECTION WITH MC. SEE DETAIL 7/P501.
6. COORDINATE CHASE SIZE WITH GC FOR STORM DRAIN PIPE. INSTALL FLOOR PIPE SUPPORT FOR ELBOW. INSTALL BOTTOM OF DOWNSPOUT NOZZLE AT 8" ABOVE GRADE. COORDINATE HEIGHT WITH GC.
7. ROUTE 1 1/2" VENT DOWN TO 2" SANITARY CLEANOUT AND 2" SANITARY DOWN TO BELOW FLOOR. INSTALL CLEANOUT IN ACCESSIBLE LOCATION.
8. PROVIDE 3/4" CW WITH BALL VALVE TO CONNECTION FOR ROOF HYDRANT (FRH).

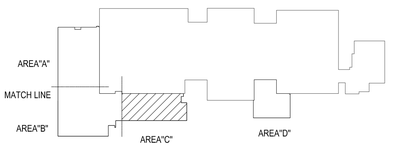

KEY PLAN

NORTH

AGP
the Abla Griffin Partnership L.L.C.
201 N. BROADWAY
SUITE 210
MOORE, OK. 73160
405.735.3477
AGP@theAGP.net
www.theAGP.net

CEDAR CREEK
CIVIL

KFC ENGINEERING
STRUCTURAL

SALAS O'BRIEN
MECHANICAL / ELECTRICAL

KC
drawn by

KP
checked by

JULY 2023
date

revisions

MOORE PUBLIC SCHOOLS
BOARD OF EDUCATION
MOORE, OKLAHOMA

MOORE Public Schools
LEARNING FOR LIFE

CLASSROOM ADDITION
HIGHLAND WEST
JUNIOR HIGH SCHOOL

sheet no:

P112

Salas O'Brien
2600 Van Buren St., Suite 2635
Norman, OK 73072
Salas O'Brien Registration: CA# 7058
Expiration Date : 6/30/2025
Salas O'Brien Project Number: 2023-02792-00

OWNERSHIP USE OF DOCUMENTS:

AGP EXPRESSLY RESERVES ITS COPYRIGHT AND OTHER PROPERTY RIGHTS OF ALL PLANS AND DRAWINGS DESIGNED AND/OR PRODUCED. PLANS AND DRAWINGS ARE NOT TO BE REPRODUCED IN ANY FORM OR MANNER WITHOUT THE EXPRESSED WRITTEN CONSENT OF AGP.

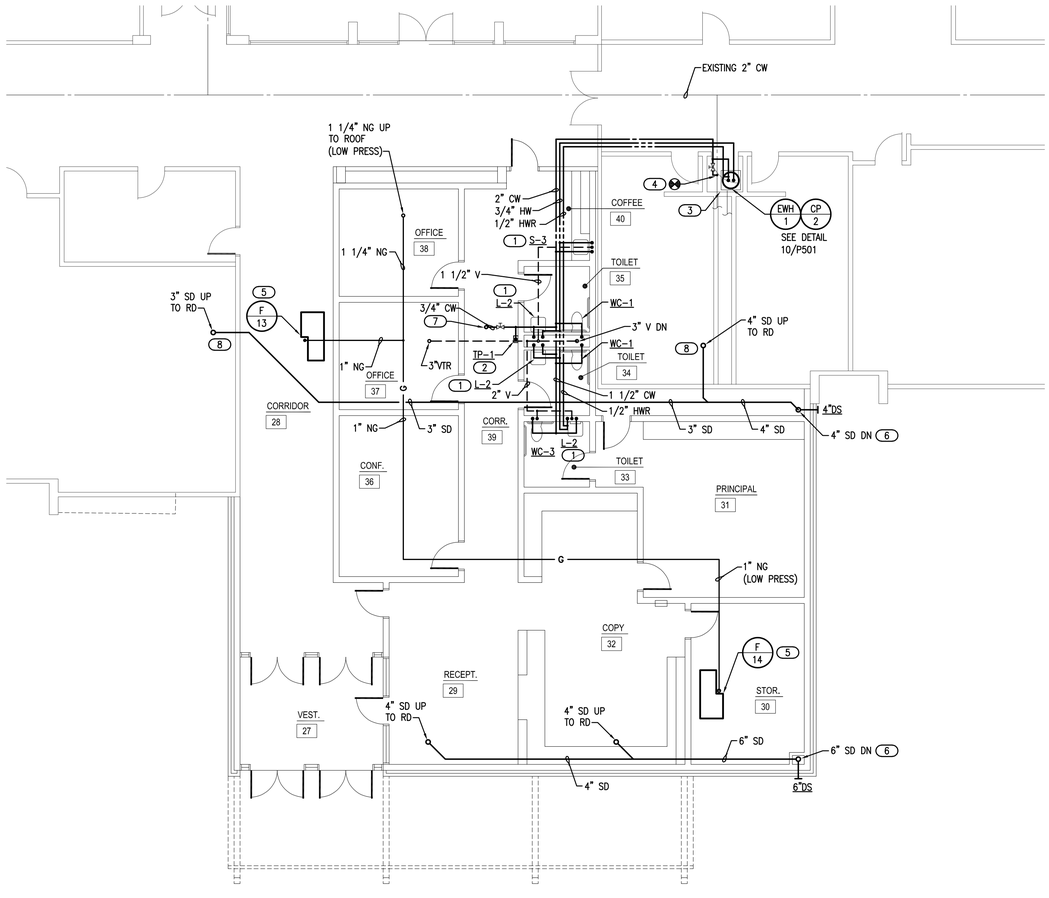

1 PLUMBING PLAN - ABOVE GRADE - AREA D

SCALE: 1/8" = 1'-0"

NORTH

GENERAL NOTES

1. COORDINATE WORK WITH ALL OTHER TRADES ON SITE.
2. PROVIDE WATER HAMMER ARRESTORS (HA) ON WATER LINES TO FLUSH VALVES, SENSOR FAUCETS AND QUICK CLOSING VALVES. LOCATE UNITS IN ACCESSIBLE LOCATIONS.
3. SINK AND LAVATORY WATER SUPPLY STUB OUTS SHALL BE COPPER PIPE WITH SUPPORT BRACKET FASTENED IN WALL CAVITY.
4. FIRE SEAL ALL PENETRATIONS THRU RATED STRUCTURES TO MAINTAIN FIRE RATING.
5. REFER TO PLUMBING FIXTURE SCHEDULE ON SHEET P601 FOR FIXTURE ROUGH-IN PIPE SIZES.
6. PROVIDE ACCESS PANELS FOR ALL VALVES/DEVICES ABOVE HARD CEILINGS AND BEHIND WALLS.
7. ALL GAS PIPE SHALL COMPLY WITH IFGC. BRANCH LINES SHALL TAP OFF TOP OF GAS MAINS AND INSTALL SHUT-OFF VALVE ON BRANCH LINE.
8. TRAP PRIMER LINES SHALL BE COPPER TYPE "K" OR PEX-a TUBING WITH CONTINUOUS SLOPE TOWARDS DRAIN CONNECTION.
9. COORDINATE HEIGHT OF EXTERIOR FREEZELESS WALL HYDRANT (FWH) WITH GC AND/OR ARCHITECT. SEAL FIXTURE FLANGE WATERTIGHT.
10. INSULATE STORM DRAIN AND SLOPE DOWN AT 1/8" PER FOOT.

KEYED NOTES

1. INSTALL THERMOSTATIC MIXING VALVE (TMV-1) BELOW LAVATORY OR SINK. SEE DETAIL 5/P501.
2. PROVIDE 1/2" CW WITH STRAINER TO TRAP PRIMER (TP-1) IN ACCESSIBLE LOCATION ABOVE LAY-IN CEILING. ROUTE (3) 1/2" LINES FROM DISTRIBUTION UNIT TO FLOOR DRAINS IN THIS AREA. COORDINATE POWER WITH EC. SEE DETAIL 1/P501.
3. CONNECT EXISTING HW LINE TO NEW WATER HEATER.
4. CONNECT 2" CW WITH BALL VALVE TO EXISTING CW LINE.
5. ROUTE 1" NATURAL GAS (LOW PRESSURE) LINE TO FURNACE. PROVIDE BALL VALVE, DRIP LEG, AND FINAL UNIT CONNECTION. COORDINATE CONNECTION WITH MC. SEE DETAIL 7/P501.
6. COORDINATE CHASE SIZE WITH GC FOR STORM DRAIN PIPE. INSTALL FLOOR PIPE SUPPORT FOR ELBOW. INSTALL BOTTOM OF DOWNSPOUT NOZZLE AT 8" ABOVE GRADE. COORDINATE HEIGHT WITH GC.
7. PROVIDE 3/4" CW WITH BALL VALVE TO CONNECTION FOR ROOF HYDRANT (FRH).
8. COORDINATE WITH GC FOR ROUTING STORM DRAIN PIPE THRU EXISTING ROOM ABOVE CEILING AND THRU EXISTING EXTERIOR WALL.

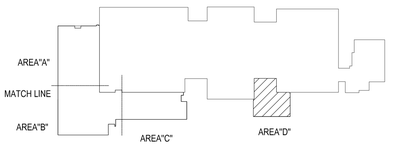

KEY PLAN

NORTH

AGP
the Abla Griffin Partnership L.L.C.
201 N. BROADWAY
SUITE 210
MOORE, OK. 73160
405.735.3477
AGP@theAGP.net
www.theAGP.net

CEDAR CREEK
CIVIL

KFC ENGINEERING
STRUCTURAL

SALAS O'BRIEN
MECHANICAL / ELECTRICAL

LICENSED PROFESSIONAL ENGINEER
Dwane McDonald
#30822
10/03/2023

KC
drawn by

KP
checked by

JULY 2023
date

revisions

MOORE PUBLIC SCHOOLS
BOARD OF EDUCATION
MOORE, OKLAHOMA

MOORE Public Schools
LEARNING FOR LIFE

CLASSROOM ADDITION
HIGHLAND WEST
JUNIOR HIGH SCHOOL

sheet no:

P113

Salas O'Brien
2600 Van Buren St., Suite 2635
Norman, OK 73072
Salas O'Brien Registration: CA# 7058
Expiration Date : 6/30/2025
Salas O'Brien Project Number: 2023-02792-00

OWNERSHIP USE OF DOCUMENTS:

AGP EXPRESSLY RESERVES ITS COPYRIGHT AND OTHER PROPERTY RIGHTS OF ALL PLANS AND DRAWINGS DESIGNED AND/OR PRODUCED. PLANS AND DRAWINGS ARE NOT TO BE REPRODUCED IN ANY FORM OR MANNER WITHOUT THE EXPRESSED WRITTEN CONSENT OF AGP.

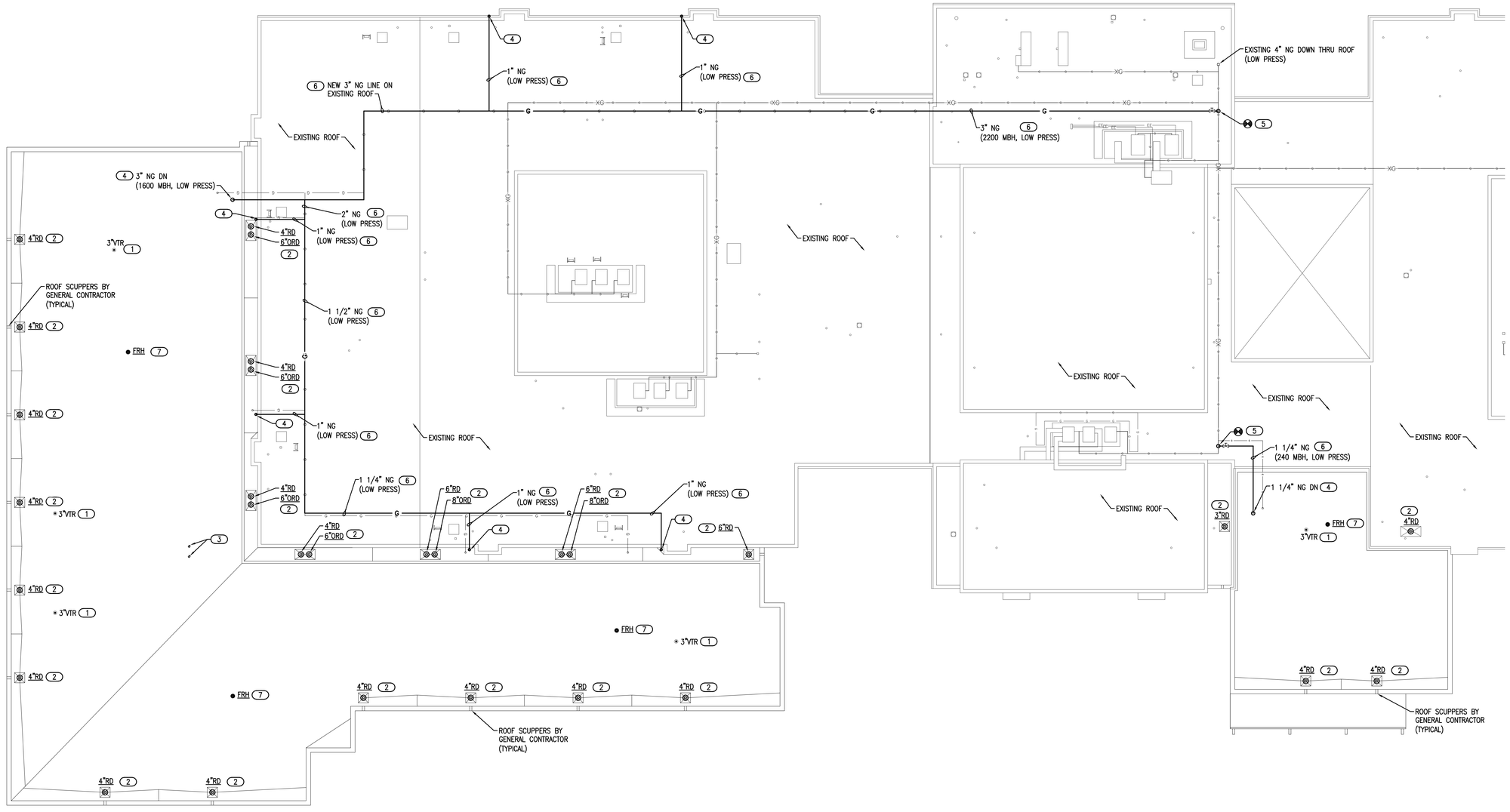

1 PLUMBING PLAN - ROOF

SCALE: 1/16" = 1'-0"

NORTH

KEYED NOTES

1. COORDINATE INSTALLATION OF PLUMBING VENTS WITH ROOFING CONTRACTOR. INSTALL VENT A MINIMUM 10'-0" FROM ANY OPENINGS, EQUIPMENT, INTAKES OR EXHAUST VENTS.
2. COORDINATE INSTALLATION OF ROOF DRAIN WITH ROOFING CONTRACTOR.
3. COORDINATE INSTALLATION OF 3" GAS WATER HEATER CONCENTRIC VENT WITH ROOFING CONTRACTOR AND PER MANUFACTURER'S RECOMMENDATIONS. INSTALL VENT A MINIMUM 10'-0" FROM ANY OPENINGS, EQUIPMENT, INTAKES, EXHAUST VENTS AND ROOF EDGE.
4. ROUTE NATURAL GAS LINE DOWN THRU ROOF. PROVIDE WEATHERPROOF BOOT AT ROOF PENETRATION AND SEAL WATERTIGHT. COORDINATE WITH ROOFING CONTRACTOR FOR ROOF PENETRATION.
5. CONNECT NEW NATURAL GAS LINE INTO TOP OF EXISTING GAS LINE. PROVIDE GAS BALL VALVE NEAR CONNECTION POINT.
6. ROUTE NATURAL GAS LINE (2 PSI) ON ROOF. PROVIDE MIRO INDUSTRIES MODEL 3-RAH-8 ROOF TOP SUPPORTS OR APPROVED EQUAL. INSTALL AT MAXIMUM OF 10'-0" APART (CENTER TO CENTER) ON ALL 1 1/4" NATURAL GAS PIPING OR LARGER. INSTALL AT 8'-0" APART ON 1" OR 3/4" NATURAL GAS PIPING. INSTALL AT 6'-0" APART ON 1/2" NATURAL GAS PIPING. REFER TO GENERAL NOTES FOR PAINTING GAS LINE. SEE DETAIL X/P501 FOR PIPE SUPPORT DETAIL.
7. COORDINATE INSTALLATION OF FREEZELESS ROOF HYDRANT (FRH) WITH STRUCTURAL AND ROOFING CONTRACTOR.

GENERAL NOTES

1. COORDINATE WORK WITH ALL TRADES ON SITE.
2. MAINTAIN MINUMUM OF 10'-0" CLEAR BETWEEN EXHAUST AND INTAKE VENTS WITH MECHANICAL EQUIPMENT AND OTHER ROOF OPENINGS.
3. FIELD VERIFY EXISTING CONDITIONS PRIOR TO COMMENCING WORK.
4. ALL ABOVE GRADE EXTERIOR NATURAL GAS PIPE SHALL BE CLEANED AND DEGREASED PRIOR TO BEING PRIMED THEN PAINTED YELLOW WITH WEATHER RESISTANT ZINC RICH PAINT.
5. PIPE IDENTIFICATION SHALL BE THE WORD "NATURAL GAS" IN BLACK LETTERS AT 5 FT INTERVALS USING PLASTIC PIPE MARKERS OR STENCILED PAINTED LETTERS.
6. ALL GAS PIPE SHALL COMPLY WITH IFGC. BRANCH LINES SHALL TAP OFF TOP OF GAS MAINS AND INSTALL SHUT-OFF VALVE ON BRANCH LINE.

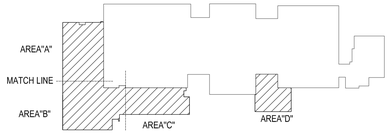

KEY PLAN

NORTH

AGP
the Abla Griffin Partnership L.L.C.
201 N. BROADWAY
SUITE 210
MOORE, OK. 73160
405.735.3477
AGP@theAGP.net
www.theAGP.net

CEDAR CREEK
CIVIL

KFC ENGINEERING
STRUCTURAL

SALAS O'BRIEN
MECHANICAL / ELECTRICAL

KC
drawn by

KP
checked by

JULY 2023
date

revisions

MOORE PUBLIC SCHOOLS
BOARD OF EDUCATION
MOORE, OKLAHOMA

MOORE Public Schools
LEARNING FOR LIFE

CLASSROOM ADDITION
HIGHLAND WEST
JUNIOR HIGH SCHOOL

sheet no:

P201

Salas O'Brien
2600 Van Buren St., Suite 2635
Norman, OK 73072
Salas O'Brien Registration: CA# 7058
Expiration Date : 6/30/2025
Salas O'Brien Project Number: 2023-02792-00

OWNERSHIP USE OF DOCUMENTS:

AGP EXPRESSLY RESERVES ITS COPYRIGHT AND OTHER PROPERTY RIGHTS OF ALL PLANS AND DRAWINGS DESIGNED AND/OR PRODUCED. PLANS AND DRAWINGS ARE NOT TO BE REPRODUCED IN ANY FORM OR MANNER WITHOUT THE EXPRESSED WRITTEN CONSENT OF AGP.

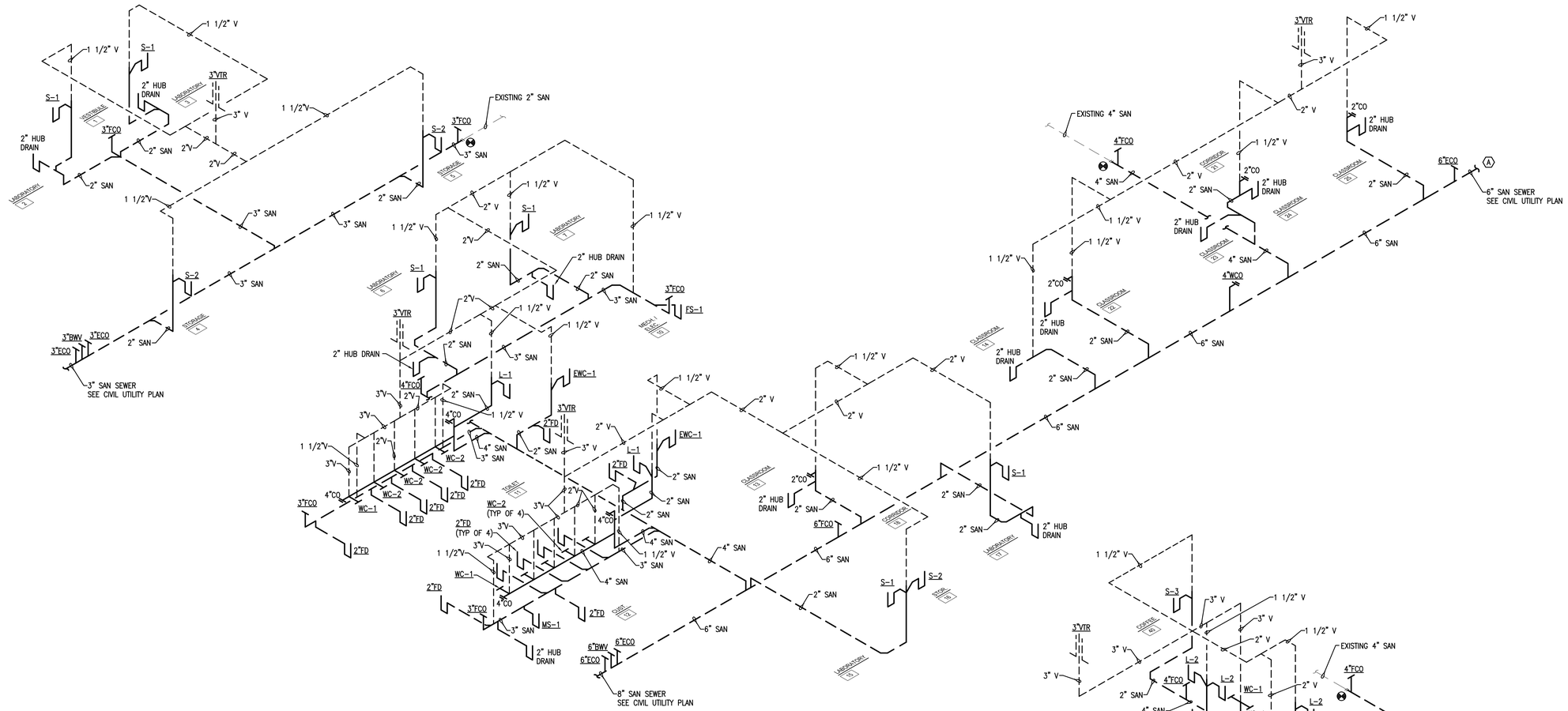

1 PLUMBING ISOMETRIC - WASTE & VENT - AREAS A, B & C
NO SCALE

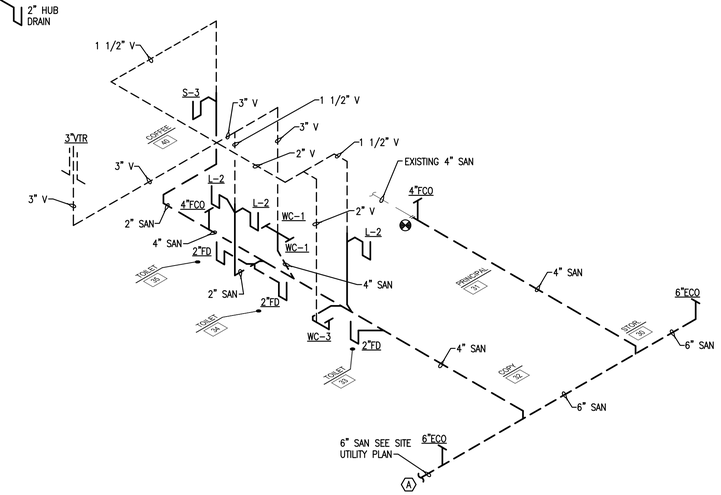

2 PLUMBING ISOMETRIC - WASTE & VENT - AREA D
NO SCALE

AGP
the Abla Griffin Partnership L.L.C.
201 N. BROADWAY
SUITE 210
MOORE, OK. 73160
405.735.3477
AGP@theAGP.net
www.theAGP.net

CEDAR CREEK
CIVIL

KFC ENGINEERING
STRUCTURAL

SALAS O'BRIEN
MECHANICAL / ELECTRICAL

LICENSED PROFESSIONAL ENGINEER
Dwayne McDonald Gordon
30822
10/03/23

KC
drawn by

KP
checked by

JULY 2023
date

revisions

MOORE PUBLIC SCHOOLS
BOARD OF EDUCATION
MOORE, OKLAHOMA

MOORE Public Schools
LEARNING FOR LIFE

CLASSROOM ADDITION
HIGHLAND WEST
JUNIOR HIGH SCHOOL

sheet no:

P301

Salas O'Brien
2600 Van Buren St., Suite 2635
Norman, OK 73072
Salas O'Brien Registration: CA# 7058
Expiration Date : 6/30/2025
Salas O'Brien Project Number: 2023-02792-00

OWNERSHIP USE OF DOCUMENTS:

AGP EXPRESSLY RESERVES ITS COPYRIGHT AND OTHER PROPERTY RIGHTS OF ALL PLANS AND DRAWINGS DESIGNED AND/OR PRODUCED. PLANS AND DRAWINGS ARE NOT TO BE REPRODUCED IN ANY FORM OR MANNER WITHOUT THE EXPRESSED WRITTEN CONSENT OF AGP.

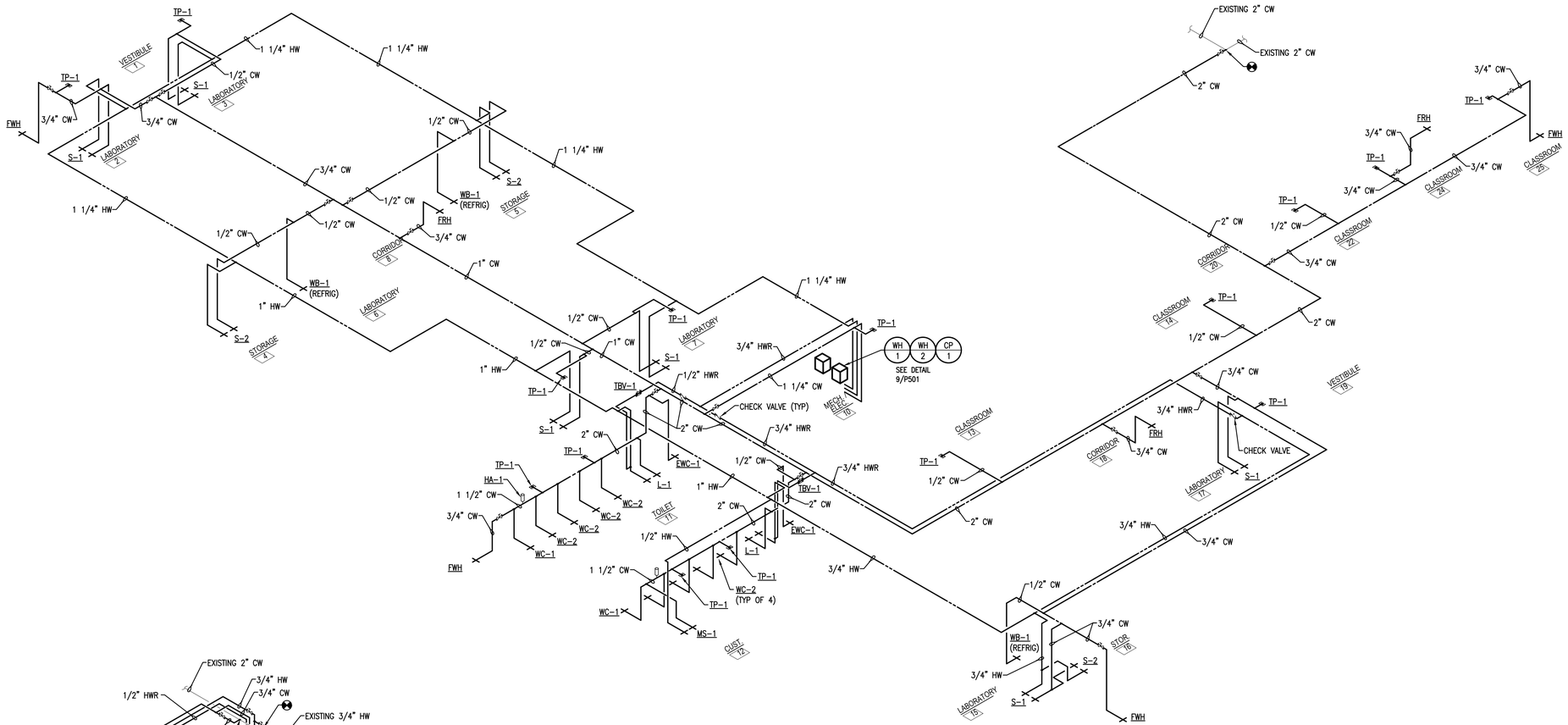

1 PLUMBING ISOMETRIC - WATER SUPPLY - AREAS A, B & C

NO SCALE

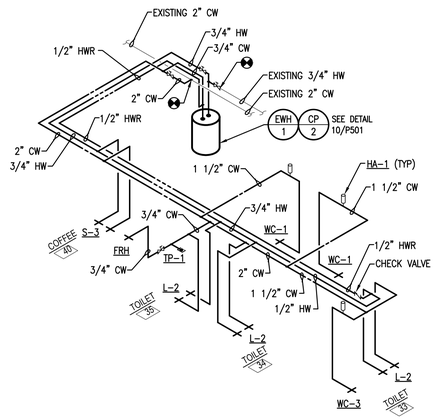

2 PLUMBING ISOMETRIC - WATER SUPPLY - AREA D

NO SCALE

AGP
the Abla Griffin Partnership L.L.C.

201 N. BROADWAY
SUITE 210
MOORE, OK. 73160
405.735.3477
AGP@theAGP.net
www.theAGP.net

CEDAR CREEK
CIVIL

KFC ENGINEERING
STRUCTURAL

SALAS O'BRIEN
MECHANICAL / ELECTRICAL

LICENSED PROFESSIONAL ENGINEER
McDonald
30822
OKLAHOMA
08/18/23

KC
drawn by

KP
checked by

JULY 2023
date

revisions

MOORE PUBLIC SCHOOLS
BOARD OF EDUCATION
MOORE, OKLAHOMA

MOORE Public Schools
LEARNING FOR LIFE

CLASSROOM ADDITION
HIGHLAND WEST
JUNIOR HIGH SCHOOL

sheet no:

P302

Salas O'Brien
2600 Van Buren St., Suite 2635
Norman, OK 73072
Salas O'Brien Registration: CA# 7058
Expiration Date : 6/30/2025
Salas O'Brien Project Number: 2023-02792-00

OWNERSHIP USE OF DOCUMENTS:

AGP EXPRESSLY RESERVES ITS COPYRIGHT AND OTHER PROPERTY RIGHTS OF ALL PLANS AND DRAWINGS DESIGNED AND/OR PRODUCED. PLANS AND DRAWINGS ARE NOT TO BE REPRODUCED IN ANY FORM OR MANNER WITHOUT THE EXPRESSED WRITTEN CONSENT OF AGP.

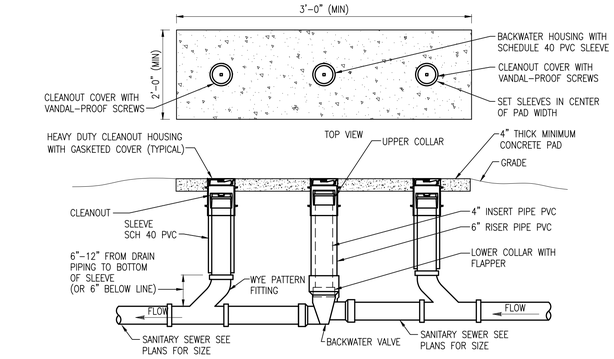

4 BACKWATER VALVE & EXTERIOR CLEANOUT DETAIL
NOT TO SCALE

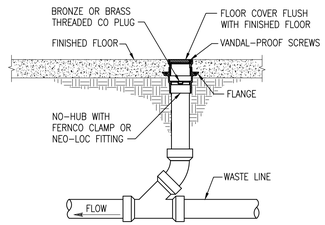

3 INTERIOR CLEANOUT DETAIL
NOT TO SCALE

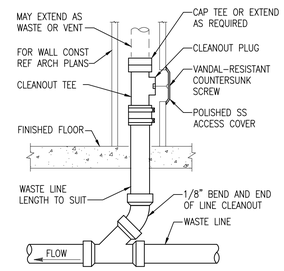

2 WALL CLEANOUT DETAIL
NOT TO SCALE

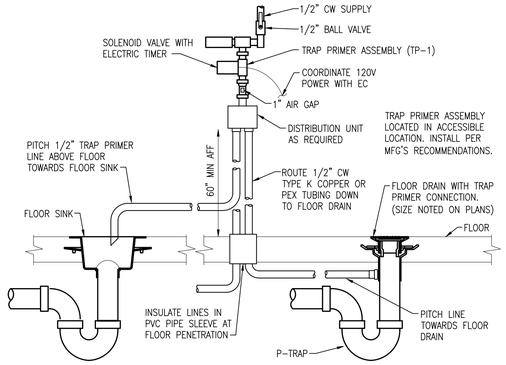

1 ELECTRIC TRAP PRIMER DETAIL
NOT TO SCALE

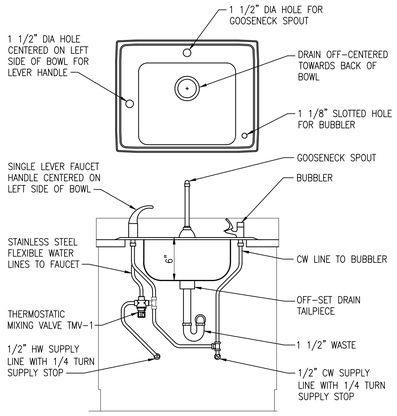

8 CLASSROOM SINK DETAIL
NOT TO SCALE

NOTE:
1. COORDINATE GAS CONNECTION TO UNIT WITH MC.
2. INSTALL PRESSURE REGULATOR PER MANUFACTURER'S RECOMMENDATIONS.

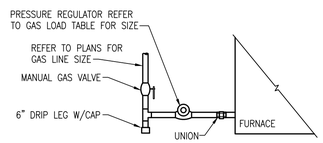

7 FURNACE GAS CONNECTION DETAIL
NOT TO SCALE

NOTE:
1. VERIFY FIXTURE HEIGHTS FOR EACH AREA WITH ARCHITECTURAL PLANS.
2. WASTE AND WATER PIPING SHALL BE CONCEALED IN CABINET COVER.
3. TMA OPTION INCLUDES: THERMOSTATIC MIXING VALVE, SUPPORT BRACKET, STAINLESS STEEL HOSES, SPLITTER FITTING, PLASTIC HOSES.
4. HWR LINE SHALL CONNECT TO HW LINE WITHIN 2'-0" OF STUB OUT TO SUPPLY STOP.

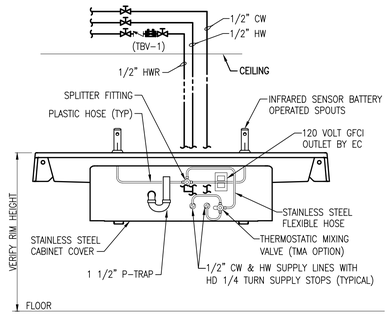

6 TWO STATION LAVATORY DETAIL
NOT TO SCALE

NOTE:
1. ALL EXPOSED WASTE PIPE SHALL BE POLISHED CHROME PLATED BRASS AND TRIMMED WITH POLISHED CHROME SHALLOW ESCUTCHEONS.
2. INSTALL THERMOSTATIC MIXING VALVE UNDER FIXTURE.

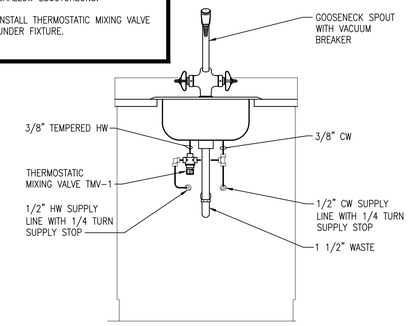

5 LAB STORAGE SINK DETAIL
NOT TO SCALE

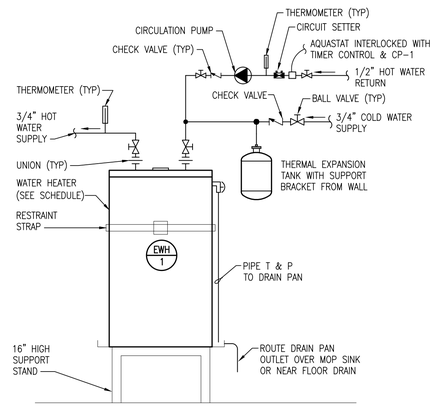

10 ELECTRIC WATER HEATER DETAIL
NOT TO SCALE

NOTE:
1. GAS REGULATORS SHALL BE INSTALLED PER MANUFACTURER'S REQUIRED DISTANCE FROM INLET GAS CONNECTION.
2. COORDINATE WIRING WITH EC.
3. INSTALL AIR INTAKE AND EXHAUST VENTING HEIGHT ABOVE ROOF PER CODE.
4. MAINTAIN CLEARANCES TO ROOF OPENINGS, PLUMBING VENTS AND EQUIPMENT PER CODE.

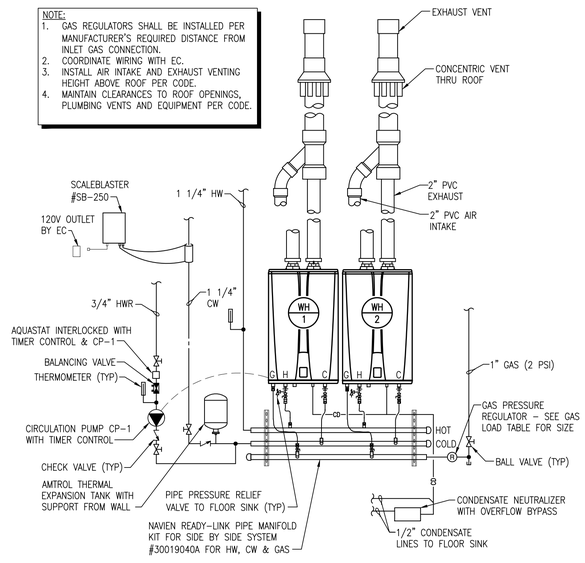

9 DUAL TANKLESS GAS WATER HEATERS DETAIL
NOT TO SCALE

AGP
the Abla Griffin Partnership L.L.C.
201 N. BROADWAY
SUITE 210
MOORE, OK. 73160
405.735.3477
AGP@theAGP.net
www.theAGP.net

CEDAR CREEK
CIVIL

KFC ENGINEERING
STRUCTURAL

SALAS O'BRIEN
MECHANICAL / ELECTRICAL

KC
drawn by

KP
checked by

JULY 2023
date

revisions

MOORE PUBLIC SCHOOLS
BOARD OF EDUCATION
MOORE, OKLAHOMA

MOORE Public Schools
LEARNING FOR LIFE

CLASSROOM ADDITION
HIGHLAND WEST
JUNIOR HIGH SCHOOL

sheet no:

P501

Salas O'Brien
2600 Van Buren St., Suite 2635
Norman, OK 73072
Salas O'Brien Registration: CA# 7058
Expiration Date : 6/30/2025
Salas O'Brien Project Number: 2023-02792-00

OWNERSHIP USE OF DOCUMENTS:

AGP EXPRESSLY RESERVES ITS COPYRIGHT AND OTHER PROPERTY RIGHTS OF ALL PLANS AND DRAWINGS DESIGNED AND/OR PRODUCED. PLANS AND DRAWINGS ARE NOT TO BE REPRODUCED IN ANY FORM OR MANNER WITHOUT THE EXPRESSED WRITTEN CONSENT OF AGP.

PLUMBING FIXTURE SCHEDULE

MARK	FIXTURE	MANUFACTURER	MODEL	MOUNT	ROUGH-IN SCHEDULE				FITTINGS AND REMARKS
					COLD	HOT	WASTE	VENT	
L-1	LAVATORY ADA 2-STATIONS	BRADLEY	VERGE LVRD2	WALL	1/2"	1/2"	1 1/2"	1 1/2"	2-STATION UNIT, 4" CENTER-SET FAUCET DRILLING (2-FAUCETS), NO SOAP DISPENSER, STAINLESS STEEL ACCESS PANEL, PVC P-TRAP. PROVIDE SLOAN BASYS BATTERY INFRARED SENSOR FAUCET EFX650-202-0000 CP WITH THERMOSTATIC MIXING VALVE. PROVIDE MCGUIRE LFBV2165CC SUPPLY STOPS. ALL AVAILABLE COLORS FOR SELECTION BY ARCHITECT. REFER TO ARCHITECT'S PLANS FOR HEIGHT AND WALL TYPE. SEE DETAIL 6/P501.
L-2	LAVATORY ADA	AMERICAN STANDARD	0355.012	WALL	1/2"	1/2"	1 1/2"	1 1/2"	COLOR WHITE. PROVIDE CHICAGO FAUCET 420-CP FAUCET. PROVIDE MCGUIRE HD155W OFFSET STRAINER, 8902C P-TRAP, & LFBV2165CC SUPPLY STOPS. TRUEBRO LAV GUARD 2 PIPE COVERS. WADE CARRIER 520-08. REFER TO ARCHITECT'S PLANS FOR MOUNTING HEIGHT AND WALL TYPE. ADA INSTALLATION.
WC-1	WATER CLOSET ADA	AMERICAN STANDARD	2257.101	WALL	1 1/4"	-	4"	-	COLOR WHITE. PROVIDE SLOAN ROYAL 111-1.6 SFSM BATTERY OPERATED FLUSH VALVE. PROVIDE BEMIS 1655SSCT OPEN FRONT ELONGATED SEAT, EXTERNAL CHECK HINGE, COLOR WHITE. WADE WALL CARRIER. REFER TO ARCHITECT'S PLANS FOR HEIGHT AND WALL TYPE. ADA INSTALLATION.
WC-2	WATER CLOSET	AMERICAN STANDARD	2257.101	WALL	1 1/4"	-	4"	-	COLOR WHITE. PROVIDE SLOAN ROYAL 111-1.6 SFSM BATTERY OPERATED FLUSH VALVE. PROVIDE BEMIS 1655SSCT OPEN FRONT ELONGATED SEAT, EXTERNAL CHECK HINGE, COLOR WHITE. WADE WALL CARRIER. REFER TO ARCHITECT'S PLANS FOR HEIGHT AND WALL TYPE.
WC-3	WATER CLOSET ADA	AMERICAN STANDARD	3043.001	FLOOR	1 1/4"	-	3"	-	COLOR WHITE. PROVIDE SLOAN ROYAL 111-1.6 SFSM BATTERY OPERATED FLUSH VALVE. PROVIDE BEMIS 1655SSCT OPEN FRONT ELONGATED SEAT, EXTERNAL CHECK HINGE, COLOR WHITE. WAX RING INSTALL KIT. ADA INSTALLATION. RIM HEIGHT 16.5"
MS-1	MOP SINK	FIAT	TSB-3000 24x24x12	FLOOR	1/2"	1/2"	3"	1 1/2"	PROVIDE 832AA HOSE & BRACKET, 889-CC MOP BRACKET, MSG 2424 SS WALL GUARDS. PROVIDE T&S BRASS FAUCET B-0665-BSTR. ASSE 1011 APPROVED HOSE CONNECTION VACUUM BREAKER, WATTS LF8A OR APPROVED EQUAL.
S-1	SINK (SCIENCE ROOM)	ELKAY	DRKAD282260 RC	COUNTER	1/2"	1/2"	1 1/2"	1 1/2"	SINK PACKAGE WITH FAUCET AT BACK, LEVER HANDLE ON LEFT SIDE CENTERED ON BOWL, BUBBLER ON RIGHT, 6" SINK DEPTH, LKAD35 OFFSET TAILPIECE W/STRAINER. PROVIDE MCGUIRE 8912 P-TRAP & LFBV2165SS SUPPLY STOPS. INSTALL MIXING VALVE TMV-1 UNDER SINK. SEE DETAIL 8/P501.
S-2	SINK LAB STORAGE	ELKAY	LRAD2219602	COUNTERTOP	1/2"	1/2"	1 1/2"	1 1/2"	SINGLE BOWL 6.0" DEEP, 2 FAUCET HOLES, REAR CENTER DRAIN. PROVIDE ELKAY LKAD35 OFFSET DRAIN & ELKAY LK406GN0S74 FAUCET, MCGUIRE 8912 P-TRAP & LFBV2165 SUPPLY STOPS. INSTALL MIXING VALVE TMV-1 UNDER SINK. SEE DETAIL 5/P501.
S-3	SINK	ELKAY	LRAD1919603	COUNTERTOP	1/2"	1/2"	1 1/2"	1 1/2"	SINGLE BOWL, S.S. 6" DEEP, 2 FAUCET HOLES. PROVIDE ELKAY LK406GN0S74 FAUCET, ELKAY DRAIN LK35. PROVIDE MCGUIRE 8912 P-TRAP & LFBV2165 SUPPLY STOPS. INSTALL MIXING VALVE TMV-1 UNDER UNIT.
EWC-1	ELECTRIC WATER COOLER DUAL	ELKAY	LZSTL8WSVRSK	WALL	1/2"	-	1 1/2"	1 1/2"	DUAL LEVEL VANDAL-RESISTANT WITH PUSH BUTTON ACTIVATION, SENSOR WATER BOTTLE FILLING STATION ON LOWER UNIT, FILTERED, 120 VOLT. PROVIDE ELKAY CANE APRON LKAPREZL ON UPPER UNIT. PROVIDE PVC P-TRAP AND 1/4 TURN SUPPLY STOP. REFER TO ARCHITECT'S PLANS FOR MOUNTING HEIGHT & WALL TYPE. ADA INSTALLATION.
FD	FLOOR DRAIN	WADE	1100-DA6-1 VP	FLOOR	-	-	SEE PLANS	-	6" ROUND NICKEL BRONZE STRAINER, CAST IRON BODY ANCHOR FLANGE, CLAMP COLLAR, ADJUSTABLE COLLAR, ADJUSTABLE STRAINER HEIGHT, VANDAL-PROOF SECURED TOP, 1/2" TRAP PRIMER CONNECTION.
FS-1	FLOOR SINK	WADE	9110-64-15-26-27	FLOOR	-	-	3"	-	8"x8" TOP, 6" DEEP, CAST IRON BODY WITH WHITE A.R.E INTERIOR, 1/2 GRATE, SEDIMENT BUCKET, ANCHOR FLANGE WITH CLAMPING COLLAR.
FCO	FLOOR CLEANOUT	WADE	6000-1-VP	FLOOR	-	-	SEE PLANS	-	6" ROUND NICKEL BRONZE TOP, CAST IRON BODY, ADJUSTABLE COLLAR, ANCHOR FLANGE, COVER HEIGHT ADJUSTMENT AFTER FLOOR IS POURED, COVER WITH VANDAL RESISTANT SCREWS.
WCO	WALL CLEANOUT	WADE	8560-75 8304-VP	WALL	-	-	SEE PLANS	-	CAST IRON CLEANOUT TEE, THREADED BRASS PLUG, PROVIDE 8304-VP STAINLESS STEEL 6" ROUND ACCESS COVER WITH VANDAL RESISTANT SECURING SCREW .
ECO	EXTERIOR CLEANOUT	WADE	8401-12 COF4-VP-81	GRADE	-	-	SEE PLANS	-	CAST IRON CLEANOUT ACCESS HOUSING, ANCHOR FLANGE, SECURED GASKETED COVER WITH CLEANOUT FERRULE WITH ABS PLUG. VANDAL PROOF SCREWS.
BWV	BACKWATER VALVE (SANITARY)	RECTORSEAL	97034	GRADE	-	-	4"	-	PVC BODY, FLAPPER WITH EXTENSION AND CAP. PROVIDE PVC SLEEVE TO FLUSH WITH FINISH GRADE. FIELD VERIFY DEPTH OF ACCESS HOUSING. ASSEMBLY MEETS IPC CODES. SEE DETAIL SHEET P501.
RD	ROOF DRAIN	WADE	3000-42-ADF -53	ROOF	-	-	SEE PLANS	-	DURA-COATED CAST IRON BODY, CAST IRON DOME, COMBINATION MEMBRANE FLASHING CLAMP/GRAVEL GUARD, ADJUSTABLE EXTENSION ASSEMBLY & UNDER DECK CLAMP.
ORD	OVERFLOW ROOF DRAIN	WADE	3000-42-ADF -53-D2	ROOF	-	-	SEE PLANS	-	DURA-COATED CAST IRON BODY, CAST IRON DOME, COMBINATION MEMBRANE FLASHING CLAMP/GRAVEL GUARD, ADJUSTABLE EXTENSION ASSEMBLY & UNDER DECK CLAMP, 2" HIGH EXTERNAL WATER DAM.
DS	DOWN SPOUT	RECTORSEAL	G-O-N	PIPE	-	-	SEE PLANS	-	CAST NICKEL BRASS BODY, OFFSET NOZZLE, WALL FLANGE.
BWV	BACKWATER VALVE (SANITARY)	RECTORSEAL	97034	GRADE	-	-	4"	-	PVC BODY, FLAPPER WITH EXTENSION AND CAP. PROVIDE PVC SLEEVE TO FLUSH WITH FINISH GRADE. FIELD VERIFY DEPTH OF ACCESS HOUSING. ASSEMBLY MEETS IPC CODES. SEE DETAIL SHEET P501.
FWH	FREEZELESS WALL HYDRANT	WOODFORD	B65	WALL	3/4"	-	-	-	CONCEALED BOX TYPE WITH HINGED DOOR, CHROME FINISH, ASSE STANDARD 1019, INSTALL AT MINIMUM 18" ABOVE GRADE, GIVE HYDRANT KEY TO OWNER.
FRH	FREEZELESS ROOF HYDRANT	WOODFORD	SRH-MS	ROOF	3/4"	-	-	-	FREEZELESS HYDRANT, ROOF MOUNTING ASSEMBLY & SUPPORT, THREADED HOSE OUTLET WITH DUAL CHECK BFP ASSE 1052. COORDINATE INSTALLATION WITH ROOFING CONTRACTOR.
HA-1	HAMMER ARRESTOR	SIOUX CHIEF	650 SERIES	PIPE	VARIES	-	-	-	LEAD-FREE CONSTRUCTION, ANSI/ASSE 1010 LISTED, PRE-CHARGED, PERMANENT SEALED AIR CHAMBER. INSTALL PER MANUFACTURER'S RECOMMENDATIONS.
TP-1	TRAP PRIMER ELECTRONIC	SIOUX CHIEF	695-ES01	PIPE	1/2"	-	-	-	ELECTRONIC UNIT WITH 24 HOUR ELECTRIC TIMER, SOLENOID VALVE, INTEGRAL BALL VALVE, WATER HAMMER ARRESTOR & AIR GAP, 1/2" CW INLET & OUTLET, 120V POWER HARD-WIRED, COORDINATE WITH EC. PROVIDE STRAINER PRIOR TO UNIT. PROVIDE DISTRIBUTION SPLITTER. SEE DETAIL SHEET P501.
AP-1	ACCESS PANEL	ELMDOR	DW 14x14 CL-SS	WALL	-	-	-	-	14"x14" STEEL, 16 GAGE DOOR & FRAME, CONCEALED HINGE, CYLINDER LOCK & KEY, STAINLESS STEEL FINISH. CONCEALED FASTENING POINTS.
TMV-1	THEROMSTATIC MIXING VALVE	WATTS	LFMMV-M1	UNDER FIXTURE	1/2"	1/2'	-	-	MIXING VALVE WITH LEAD FREE DESIGN, ADJUSTABLE TEMPERATURE SET-POINT & LOCKABLE, INTEGRAL CHECK STOPS & STRAINERS, 3/8" INLETS & OUTLET. SET OUTLET TEMP AT 105 DEGREES F. ASSE 1070 LISTED.
WB-1	WATER BOX	SIOUX CHIEF	696-G1010WF	WALL	1/2"	-	-	-	RECESSED WALL MOUNTED BOX WITH FLANGE, 1/4 TURN BALL VALVE WITH HAMMER ARRESTER AND 1/4" OUTLET. COORDINATE INSTALL HEIGHT WITH EQUIPMENT SUPPLIER.
TG-1	TRAP GUARD	RECTORSEAL	SURESEAL	PIPE	-	-	SEE PLANS	-	ONLY PROVIDE TRAP GUARDS IF ALLOWED BY AHJ. ASSE 1072 LISTED, HDPE OR ABS PLASTIC HOUSING WITH HEAVY DUTY SILICONE DIAPHRAGM & RUBBER SEALING GASKET TO PREVENT EVAPORATION OF TRAP SEAL. INSTALL UNIT IN FLOOR DRAINS, FLOOR SINKS AND HUB DRAINS.
TBV-1	THERMOSTATIC BALANCING VALVE	CALEFFI	THERMOSETTER SERIES 116141AC-001	PIPE	1/2"	-	-	-	1/2" THERMOSTATIC BALANCING VALVE ASSEMBLY, TEMPERATURE GAUGE, CHECK VALVE, BALL VALVE ON EACH SIDE OF VALVE. COORDINATE HWR TEMPERATURE WITH OWNER.

GAS WATER HEATER SCHEDULE

MARK	LOCATION	TEMPERATURE RISE	FLOW RATE GAL/MIN	CAPACITY (GALLONS)	MBH INPUT MAX	AIR INTAKE	FLUE EXHAUST	MANUFACTURER & MODEL NO.	NOTES
WH 1	MECH/ELEC ROOM 15	(50°F - 120°F) 70°F	5.5	TANKLESS	199.9	3"	3"	NVAIEN NPE-240S2	ALL
WH 2	MECH/ELEC ROOM 15	(50°F - 120°F) 70°F	5.5	TANKLESS	199.9	3"	3"	NVAIEN NPE-240S2	ALL

NOTES:
1. INSTALL AND VENT PER MANUFACTURER'S RECOMMENDATIONS.
2. COORDINATE POWER SUPPLY WITH ELECTRICAL CONTRACTOR. POWER SUPPLY TO UNIT 120V, 2 AMP (GFCI OUTLET).
3. PROVIDE AMTROL ST-5 THERMAL EXPANSION TANK ON COLD WATER LINE.
4. PROVIDE CLEAR WATER ENVIRO TECHNOLOGIES SCALEBLASTER MODEL SB-250 ELECTRONIC DESCALER. COORDINATE 120 VOLT OUTLETS WITH EC.
5. PROVIDE NAVIEN CONDENSATE NEUTRALIZER KIT AND OVERFLOW BY-PASS PIPING TO FLOOR SINK PER MANUFACTURER'S RECOMMENDATIONS.
6. PROVIDE NAVIEN CONCENTRIC INTAKE/EXHAUST VENT THRU ROOF.
7. PROVIDE NAVIEN READY-LINK COMMUNICATIONS CABLE.
8. PROVIDE NAVIEN PLUMB EASY VALVE SET.
9. PROVIDE NAVIEN READY-LINK WALL MOUNT PIPING MANIFOLD SYSTEM FOR WATER HEATERS.
10. SEE DETAILS SHEET P501 FOR MORE INFORMATION.

ELECTRIC WATER HEATER SCHEDULE

MARK	LOCATION	TEMPERATURE RISE	CAPACITY GALLONS	AMPS	ELEMENT KW	VOLTAGE	PHASE	MANUFACTURER & MODEL NO.	NOTES
EWH 1	CUST ROOM	70 DEG @ 25 GPH	30	22	4.5	208	1	AO SMITH DEL-30	ALL

NOTES:
1. INSTALL PER MANUFACTURER'S RECOMMENDATIONS.
2. SET OUTLET TEMPERATURE TO 120°F. VERIFY TEMPERATURE WITH OWNER.
3. PROVIDE AMTROL ST-5 THERMAL EXPANSION TANK ON COLD WATER LINE TO WATER HEATER.
4. PROVIDE HOLD RITE FLOOR STAND MODEL 40-S-24-U WITH DRAIN PAN MODEL QP-26 OR APPROVED EQUAL.
5. EWH-1 SERVED BY CP-2.
6. COORDINATE WIRING WITH E.C.
7. SEE DETAIL SHEET P501 FOR MORE INFORMATION.

CIRCULATION PUMP SCHEDULE

MARK	MAXIMUM WORKING PRESSURE	MAXIMUM OPERATING TEMP (°F)	MOTOR				FLANGE SIZE (INCHES)	MATERIAL	MANUFACTURER & MODEL NO.	NOTES
			ELECTRICAL CHAR	F.L. AMPS	HP	RPM				
CP 1	150 PSI	225	115/60/1	3.5	1/6	3300	3/4"	S.S.	GRUNDFOS UPS 26-150 SF	1-4,6,7
CP 2	150 PSI	225	115/60/1	3.5	1/6	3300	3/4"	S.S.	GRUNDFOS ALPHA 15-55 HWR	1,4,5,6,7

NOTES:
1. PROVIDE GRUNDFOS BRONZE 3/4" FLANGE SET.
2. CP-1 DATA: 4 GPM AT 35 FEET HEAD.
3. PROVIDE HONEYWELL AQUASTAT L6006C, STRAP TO HWR PIPE.
4. PROVIDE 24 HOUR TIMER, INTERMATIC DT620 - SET TIMER PER OWNER'S REQUIREMENTS.
5. CP-2: 0.6 GPM, 5 FEET HEAD. PROVIDE AQUASTAT, STRAP TO HWR PIPE.
6. COORDINATE WIRING WITH E.C.
7. SEE DETAIL SHEET P501 FOR MORE INFORMATION.

GAS LOAD TABLE

(-)	INPUT(MBH)	REQUIRED PRESSURE	REQUIRED REGULATOR	SYSTEM PRESSURE	NOTES
F-1	100	7"	NONE	LOW	1,2,3
F-2	100	7"	NONE	LOW	1,2,3
F-3	100	7"	NONE	LOW	1,2,3
F-4	100	7"	NONE	LOW	1,2,3
F-5	100	7"	NONE	LOW	1,2,3
F-6	100	7"	NONE	LOW	1,2,3
F-7	100	7"	NONE	LOW	1,2,3
F-8	100	7"	NONE	LOW	1,2,3
F-9	100	7"	NONE	LOW	1,2,3
F-10	100	7"	NONE	LOW	1,2,3
F-11	100	7"	NONE	LOW	1,2,3
F-12	100	7"	NONE	LOW	1,2,3
F-13	120	7"	NONE	LOW	1,2,3
F-14	120	7"	NONE	LOW	1,2,3
WH-1	199.9	7"	NONE	LOW	1,2,3
WH-2	199.9	7"	NONE	LOW	1,2,3
TOTAL LOAD	1840 MBH				

NOTES:
1. INSTALL AND VENT REGULATOR PER MANUFACTURER'S RECOMMENDATIONS.
2. PROVIDE VENT LIMITING DEVICE IF REQUIRED FOR INDOOR REGULATORS EQUIPPED WITH INTEGRAL VENT LIMITING ORIFICE MODEL 12A09.
3. COORDINATE WITH MECHANICAL CONTRACTOR FOR EQUIPMENT LOCATIONS AND REQUIRED CONNECTION.
4. PROVIDE VENT LIMITING DEVICE IF REQUIRED FOR INDOOR REGULATORS EQUIPPED WITH INTEGRAL VENT LIMITING ORIFICE MODEL 12A39.

AGP
the Abla Griffin Partnership L.L.C.
201 N. BROADWAY
SUITE 210
MOORE, OK. 73160
405.735.3477
AGP@theAGP.net
www.theAGP.net

CEDAR CREEK
CIVIL

KFC ENGINEERING
STRUCTURAL

SALAS O'BRIEN
MECHANICAL / ELECTRICAL

KC
drawn by

KP
checked by

JULY 2023
date

revisions

MOORE PUBLIC SCHOOLS
BOARD OF EDUCATION
MOORE, OKLAHOMA

MOORE Public Schools
LEARNING FOR LIFE

CLASSROOM ADDITION
HIGHLAND WEST
JUNIOR HIGH SCHOOL

sheet no:

P601

Salas O'Brien
2600 Van Buren St., Suite 2635
Norman, OK 73072
Salas O'Brien Registration: CA# 7058
Expiration Date : 6/30/2025
Salas O'Brien Project Number: 2023-02792-00

OWNERSHIP USE OF DOCUMENTS:

AGP EXPRESSLY RESERVES ITS COPYRIGHT AND OTHER PROPERTY RIGHTS OF ALL PLANS AND DRAWINGS DESIGNED AND/OR PRODUCED. PLANS AND DRAWINGS ARE NOT TO BE REPRODUCED IN ANY FORM OR MANNER WITHOUT THE EXPRESSED WRITTEN CONSENT OF AGP.

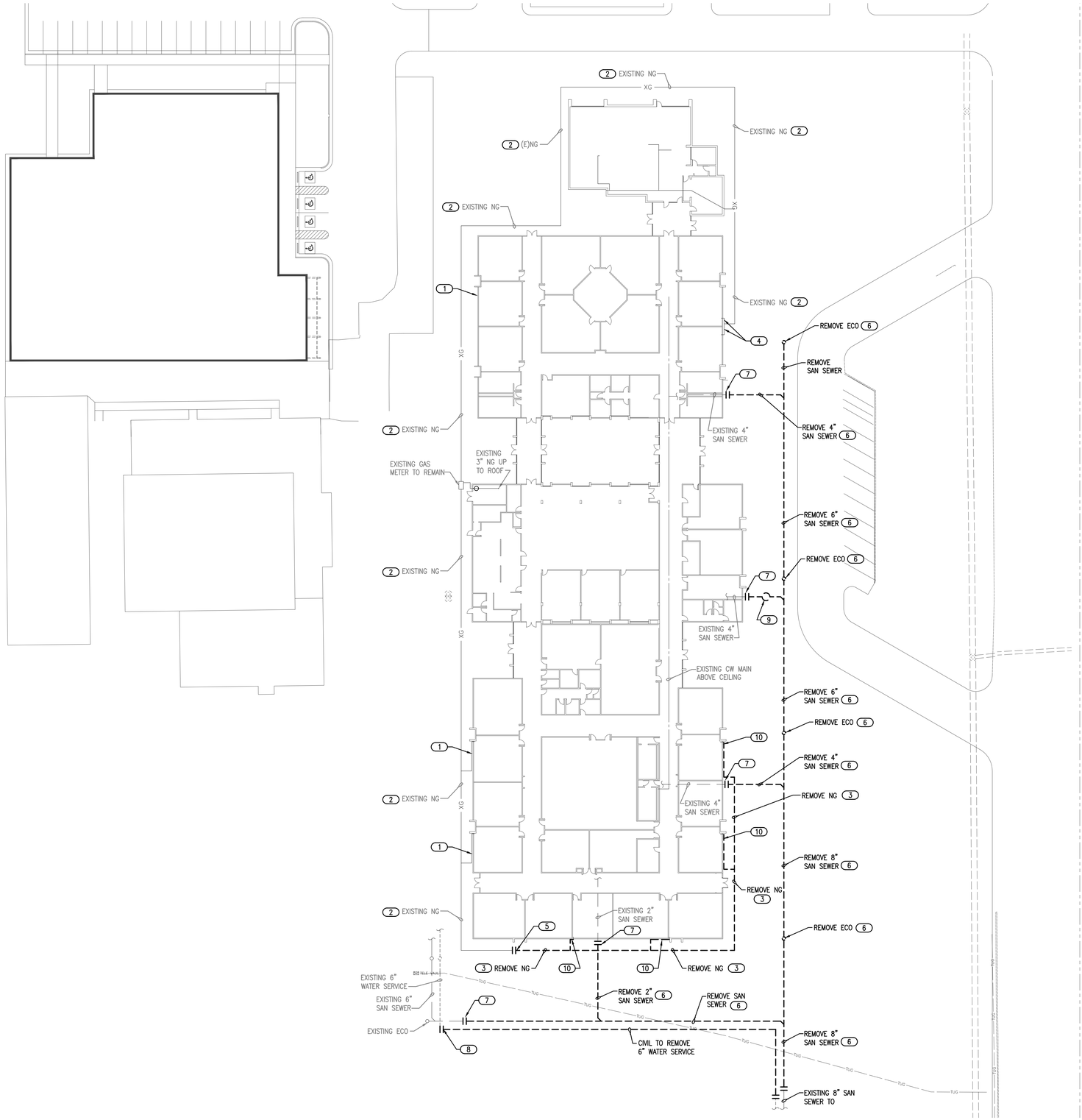

1 PLUMBING DEMOLITION PLAN - OVERALL

SCALE: 1/32" = 1'-0"

NORTH

GENERAL NOTES

1. COORDINATE WORK WITH ALL OTHER TRADES ON SITE.
2. FIELD VERIFY EXISTING CONDITIONS PRIOR TO COMMENCING WORK.
3. COORDINATE ANY UTILITY SHUT-DOWNS WITH OWNER, UTILITY COMPANY AND GENERAL CONTRACTOR.

KEYED NOTES

(1) NATURAL GAS LINE STUBBED OUT OF WALL FROM FURNACE CLOSET TO REMAIN FOR ROUTING UP TO ROOF. REMOVE EXPOSED GAS LINE RUNNING ALONG BOTTOM EDGE OF EXTERIOR WALL. CAP GAS LINE STUBBED UP THRU CONCRETE SIDEWALK.

(2) EXISTING NATURAL GAS LINE BELOW GRADE TO REMAIN.

(3) REMOVE BELOW GRADE NATURAL GAS LINE THAT WILL BE UNDER NEW ADDITION FOOTPRINT.

(4) EXISTING NATURAL GAS LINE UP FROM BELOW GRADE AND INTO BUILDING TO REMAIN.

(5) REMOVE NATURAL GAS LINE BELOW GRADE TO POINT 5'-0" BEYOND NEW ADDITION FOOTPRINT.

(6) SITE CONTRACTOR TO REMOVE BELOW GRADE SANITARY SEWER LINE FOR INSTALLING NEW PIPING.

(7) COORDINATE WITH SITE CONTRACTOR FOR REMOVING BELOW GRADE SANITARY SEWER TO THIS POINT FOR REROUTING SERVICE. FIELD VERIFY LOCATION.

(8) SITE CONTRACTOR TO REMOVE BELOW GRADE WATER SERVICE TO THIS POINT FOR REROUTING SERVICE. FIELD VERIFY LOCATION.

(9) COORDINATE WITH SITE CONTRACTOR FOR REMOVING SANITARY SEWER BACKWATER VALVE ASSEMBLY.

(10) NATURAL GAS LINE STUBBED OUT OF WALL FROM FURNACE CLOSET TO REMAIN FOR ROUTING UP TO ROOF. REMOVE EXPOSED GAS LINE RUNNING ALONG BOTTOM EDGE OF EXTERIOR WALL AND GAS LINE BELOW GRADE TO MAIN. COORDINATE WITH SITE CONTRACTOR.

AGP
the Abla Griffin Partnership L.L.C.

201 N. BROADWAY
SUITE 210
MOORE, OK. 73160
405.735.3477
AGP@theAGP.net
www.theAGP.net

CEDAR CREEK
CIVIL

KFC ENGINEERING
STRUCTURAL

SALAS O'BRIEN
MECHANICAL / ELECTRICAL

OKLAHOMA PROFESSIONAL ENGINEER
Kimayne M. McDonald
30572
06/28/23

KC
drawn by

KP
checked by

JULY 2023
date

revisions

MOORE PUBLIC SCHOOLS
BOARD OF EDUCATION
MOORE, OKLAHOMA

MOORE Public Schools
LEARNING FOR LIFE

CLASSROOM ADDITION
HIGHLAND WEST
JUNIOR HIGH SCHOOL

sheet no:

PD101

Salas O'Brien
2600 Van Buren St., Suite 2635
Norman, OK 73072
Salas O'Brien Registration: CA# 7058
Expiration Date : 6/30/2025
Salas O'Brien Project Number: 2023-02792-00

OWNERSHIP USE OF DOCUMENTS:

AGP EXPRESSLY RESERVES ITS COPYRIGHT AND OTHER PROPERTY RIGHTS OF ALL PLANS AND DRAWINGS DESIGNED AND/OR PRODUCED. PLANS AND DRAWINGS ARE NOT TO BE REPRODUCED IN ANY FORM OR MANNER WITHOUT THE EXPRESSED WRITTEN CONSENT OF AGP.

TECHNOLOGY LEGEND

'D#'	DESIGNATES THAT THE ASSOCIATED TECHNOLOGY OUTLET IS INTENDED FOR THE USE OF A NETWORK CONNECTION. THE '#' SHALL BE REPLACED WITH NUMERIC TEXT THAT IDENTIFIES THE TOTAL NUMBER OF CATEGORY 6 NETWORK CABLES THAT ARE TO BE INSTALLED AT THE TECHNOLOGY OUTLET LOCATION. CONTRACTOR TO PROVIDE AND INSTALL CATEGORY 6 NETWORK CABLES, CATEGORY 6 CONNECTORS, STAINLESS STEEL FACEPLATES WITH IDENTIFICATION WINDOWS, LABELS, BLANK INSERTS, AND ANY OTHER MATERIALS REQUIRED TO FURNISH A COMPLETE FUNCTIONAL AND TESTED OUTLET LOCATION. ALL FACEPLATES PROVIDED SHALL CONTAIN A MINIMUM 4-PORTS AND SHALL BE APPROPRIATELY SIZED TO ACCOMMODATE THE NUMBER OF CIRCUITS BEING INSTALLED AT THIS TECHNOLOGY OUTLET LOCATION. MAXIMUM OF SIX(6) DATA CABLES PER OUTLET.
'W'	DESIGNATES THAT THE ASSOCIATED TECHNOLOGY OUTLET IS INTENDED FOR THE USE OF A WALL MOUNTED TELEPHONE CONNECTION. CONTRACTOR TO PROVIDE AND INSTALL (1) CATEGORY 6 NETWORK CABLE, (1) CATEGORY 6 CONNECTOR, STAINLESS STEEL WALL TELEPHONE FACEPLATE, LABELS, AND ANY OTHER MATERIALS REQUIRED TO FURNISH A COMPLETE FUNCTIONAL AND TESTED CIRCUIT AT EACH LOCATION SHOWN. CONTRACTOR SHALL MOUNT THIS OUTLET AT ADA HEIGHT (MATCH LIGHT SWITCH HEIGHT) AND COORDINATE ALL FINAL LOCATIONS WITH OTHER TRADES ON THE PROJECT TO VERIFY THAT THE LOCATION OF THE OUTLET MAINTAINS 8" OF CLEARANCE ON ALL FOUR SIDES OF THE BACK BOX. OUTLETS SHALL REMAIN CLEAR OF ROOM DOORS, CABINET DOORS, APPLIANCE DOORS, AND SLIDING DRAWERS.
'AP'	DESIGNATES THAT THE ASSOCIATED TECHNOLOGY OUTLET IS INTENDED FOR THE USE OF A WIRELESS ACCESS POINT CONNECTION. CONTRACTOR TO PROVIDE AND INSTALL (2)CATEGORY 6 NETWORK CABLE, (2) CATEGORY 6 CONNECTOR, (2) CAT 6 BISCUIT JACK FACEPLATE WITH IDENTIFICATION WINDOWS, LABELS, AND ANY OTHER MATERIALS REQUIRED TO FURNISH A COMPLETE FUNCTIONAL AND TESTED CIRCUIT AT EACH LOCATION SHOWN. REFERENCE SPECIFICATIONS FOR PATCH CABLE REQUIREMENTS.
'FF'	INDICATES THAT THE ASSOCIATED TECHNOLOGY OUTLET IS INTENDED FOR FURNITURE FEED, ALLOWING CABLING TO ROUTE INTO A MODULAR FURNITURE SYSTEM. CONDUIT SHALL BE SIZE TO ACCOMMODATE THE NUMBER CABLE ROUTING INTO TO THE FURNITURE SYSTEM.
'V#'	VOICE OUTLET WITH CABLE AND TERMINATION AS INDICATED.

NOTES:

REFERENCE TECHNOLOGY GENERAL NOTES, PLAN KEYED NOTES, AND ALL OTHER SYSTEM LEGENDS/NOTES. THE STRUCTURED CABLING SYSTEM CONTRACTOR SHALL PROVIDE AND INSTALL CATEGORY 6/6A CABLE TO ALL SYSTEMS' EQUIPMENT REQUIRING NETWORK CONNECTIVITY.

RACEWAY LEGEND

	INDICATES THE LOCATION OF A FLOOR MOUNTED BOX AND RACEWAY FOR LOW VOLTAGE. CONTRACTOR TO PROVIDE AND INSTALL A FLOOR BOX. EACH FLOOR BOX SHALL HAVE ONE (1) SINGLE GANG PORT WITH ONE (1) 1" CONDUIT(PER EVERY SIX(6) CATEGORY 6 OR FOUR(4) CATEGORY 6A CABLES) AND ONE (1) DOUBLE GANG PORT WITH ONE (1) 1 1/2" CONDUIT UNLESS NOTED OTHERWISE. ALL CONDUITS SHALL ROUTE FROM THE FLOOR BOX, DIRECTLY TO THE WALL INDICATED AND STUB-UP INTO THE NEAREST ACCESSIBLE PLENUM CEILING
	INDICATES THE LOCATION OF A CEILING MOUNTED OUTLET. CONTRACTOR SHALL MOUNT THIS OUTLET AT +12" ABOVE THE CEILING AND COORDINATE ALL FINAL LOCATIONS WITH OTHER TRADES ON THE PROJECT TO VERIFY THAT THE LOCATION OF THE OUTLET MAINTAINS 12" OF CLEARANCE FROM THE FRONT OF THE FACEPLATE FOR OWNER ACCESS.
	INDICATES THE LOCATION OF A NEW LOW VOLTAGE OUTLET. CONTRACTOR TO PROVIDE ONE (1) DOUBLE GANG BACK BOX WITH A SINGLE GANG REDUCER ONE (1) 1" CONDUIT STUBBING INTO THE NEAREST, ACCESSIBLE PLENUM CEILING.
	INDICATES THE LOCATION OF A NEW LOW VOLTAGE OUTLET. CONTRACTOR TO PROVIDE ONE (1) DOUBLE GANG BACK BOX WITH ONE (1) 1 1/4" CONDUITS STUBBING INTO THE NEAREST, ACCESSIBLE PLENUM CEILING.
	INDICATES THE LOCATION OF A NEW LOW VOLTAGE OUTLET. CONTRACTOR TO PROVIDE ONE (1) SINGLE GANG BACK BOX WITH ONE (1) 3/4" CONDUITS STUBBING INTO THE NEAREST, ACCESSIBLE PLENUM CEILING.

NOTES:

A. SYSTEM INSTALLER TO PROVIDE AND INSTALL A PLASTIC PROTECTIVE BUSHING ON ALL CONDUIT STUB-UP AND SLEEVES, PRIOR TO ROUTING CABLING IN CONDUIT, CUTTING BUSHING TO FIT ROUND INSTALLED CABLE WILL NOT BE ACCEPTED

B. NO CONDUITS SHALL EXCEED FOR 40% MAXIMUM FILL RATIO. CONTRACTOR TO PROVIDE ADDITIONAL CONDUITS REQUIRED.

C. ANY CONDUIT INSTALL FOR AUDIO /VIDEO SYSTEMS SHALL INCLUDE AT LEAST ONE (1) 1 1/4" CONDUIT.

INTRUSION DETECTION LEGEND

IDP	DESIGNATES THE LOCATION OF THE INTRUSION DETECTION SYSTEM, CONTROL PANEL, ZONE EXPANDER AND POWER SUPPLIES. ELECTRICAL CONTRACTOR TO PROVIDE 120V POWER TO PANEL.
DC	FLUSH MOUNTED MAGNETIC DOOR CONTACT.
KP	INTRUSION DETECTION SYSTEM ARM/DISARM KEYPAD.
M	STANDARD RANGE WALL MOUNTED MOTION DETECTOR. PROVIDE WALL MOUNT FOR EACH DEVICE INSTALLED.
M	CEILING MOUNTED, 360° MOTION DETECTOR.
SS	SECURITY SYSTEM ALARM SIREN

NOTES:

1. REFERENCE DIVISION SHEET SPECIFICATIONS FOR ADDITIONAL INFORMATION AND REQUIREMENTS

CONDUIT / CABLE FILL CHART

CONDUIT SIZE (ID)	4-PR UTP CATEGORY 3	4-PR UTP CATEGORY 5/5E	4-PR UTP CATEGORY 6	4-PR UTP CATEGORY 6A	4-PR UTP CATEGORY 3/5	12-ST ARMORED FIBER OPTIC CABLE
1"	12	9	6	4	-	-
1-1/4"	21	15	12	8	-	-
1-1/2"	28	21	16	11	1	-
2"	47	35	27	19	3	1
3"	124	93	72	50	8	3
4"	208	155	120	83	12	6

A. CONDUIT SIZE FOR 25-PAIR COPPER AND FIBER OPTIC CABLES APPLY TO SLEEVE SIZES ONLY. CONDUIT SIZES SHALL BE SIZED BASED ON MAXIMUM FILL RATION AND ALLOWING INSTALLATION TO NOT EXCEED THE MAXIMUM ALLOWABLE PULL TENSION.

B. CONDUIT FILL RATIO MAY VARY BY MANUFACTURER. THIS CHART SHALL STIPULATE A MINIMUM REQUIREMENT. CONTRACTOR SHALL REFERENCE MANUFACTURER SPECIFICATION AND DECREASE CABLE COUNT PER CONDUIT SIZE IF REQUIRED.

C. SIZES SHOWN DEPICT THE INTERIOR DIAMETER OF THE CONDUIT.

ACCESS CONTROL LEGEND

SYMBOL	DESCRIPTION
CR	WALL OR MULLION MOUNTED ACCESS CONTROL PROXIMITY CARD READER.
CR	DOOR MOUNTED ACCESS CONTROL PROXIMITY CARD READER THAT IS INTEGRATED INTO THE DOOR HARDWARE.
DR	DOOR RELEASE BUTTON
ACP	DESIGNATES THE LOCATION OF THE ACCESS CONTROL SYSTEM, CONTROL PANEL. ELECTRICAL CONTRACTOR TO PROVIDE 120V POWER TO PANEL. PROVIDE NETWORK CABLE TO PANEL AND COORDINATE WITH THE OWNER'S TECHNOLOGY DEPARTMENT ON ACQUIRING AN IP ADDRESS.
DS	WALL OR MULLION MOUNTED, 2-WAY AUDIO/VIDEO INTERCOM DOOR STATION.
DS	DOOR MOUNTED, 2-WAY AUDIO/VIDEO INTERCOM DOOR STATION.
MS	2-WAY AUDIO/VIDEO INTERCOM MASTER STATION.
PB	ADA AUTO DOOR OPEN BUTTON. SHOWN FOR REFERENCE ONLY, BUTTON AND AUTO DOOR OPERATOR PROVIDED AND INSTALLED BY THE DOOR SYSTEM INSTALLER.
DC	DPDT MAGNETIC DOOR CONTACT/DOOR POSITION SENSOR. FLUSH MOUNTED IN DOOR FRAME, UNLESS NOTED OTHERWISE.
LD	LOCKDOWN BUTTON

NOTES:

1. REFERENCE ACCESS CONTROL SCHEDULE, DETAILS, AND DIVISION 28 SPECIFICATIONS FOR ADDITIONAL INFORMATION AND REQUIREMENTS

VIDEO SURVEILLANCE LEGEND

SYMBOL	DESCRIPTION
#	4-SENSOR CAMERA WITH 3-SENSOR PROVIDING A 270 DEGREE AREA OF VIEW AND 1-SENSOR PROVIDING COVERAGE DIRECTLY UNDERNEATH THE CAMERA LOCATION. '#' TO BE REPLACED WITH AN ALPHABETICAL TEXT DEPICTING THE CAMERA TYPE AS ASSOCIATED WITH THE VIDEO SURVEILLANCE CAMERA SCHEDULE.
#	4-SENSOR CAMERA, 4-SENSORS TO PROVIDE A 360 DEGREE AREA OF VIEW.'#' TO BE REPLACED WITH AN ALPHABETICAL TEXT DEPICTING THE CAMERA TYPE AS ASSOCIATED WITH THE VIDEO SURVEILLANCE CAMERA SCHEDULE.
# # # # #	2-SENSOR CAMERA, EACH SENSOR SHALL BE POSITIONED TO PROVIDE COVERAGE IN THE DIRECTION SHOWN. '#' TO BE REPLACED WITH AN ALPHABETICAL TEXT DEPICTING THE CAMERA TYPE AS ASSOCIATED WITH THE VIDEO SURVEILLANCE CAMERA SCHEDULE.
#	1-SENSOR CAMERA, SENSOR SHALL BE POSITIONED TO PROVIDE COVERAGE IN THE DIRECTION SHOWN. '#' TO BE REPLACED WITH AN ALPHABETICAL TEXT DEPICTING THE CAMERA TYPE AS ASSOCIATED WITH THE VIDEO SURVEILLANCE CAMERA SCHEDULE.

NOTES:

1. REFERENCE VIDEO SURVEILLANCE SCHEDULE AND DIVISION 28 SPECIFICATIONS FOR ADDITIONAL INFORMATION AND REQUIREMENTS

SECURITY GENERAL NOTES

1. THE SECURITY SYSTEM INSTALLERS SHALL BE RESPONSIBLE FOR CONNECTING ALL APPLICABLE SYSTEM EQUIPMENT TO THE OWNER'S NETWORK.
2. THE SYSTEM INSTALLER SHALL PROPERLY SUPPORT ALL INSTALLED SYSTEM CABLING FROM AN APPROVED CABLE SUPPORT SYSTEM AS DETAILED IN SPECIFICATIONS. NO CABLING SHALL BE ROUTED AND TIED DIRECTLY TO BUILDING STEEL, CEILING GRID SUPPORT, CONDUIT, PIPING, OR DUCTWORK. THE CABLE SUPPORT SYSTEM SHALL BE DIRECTLY CONNECTED TO THE BUILDING'S STEEL JOIST. AT LOCATIONS WHERE THE BOTTOM OF THE JOIST IS MORE THAN 5' ABOVE THE CEILING, THE SYSTEM INSTALLER SHALL PROVIDE AND INSTALL THREADED ROD AND ALL REQUIRED MATERIALS TO CONNECT THE THREADED ROD TO THE BUILDING STEEL AND THE CABLE SUPPORT SYSTEM TO THE THREADED ROD. CABLE PATHWAY SHALL NOT BE HIGHER THAN 5' ABOVE THE CEILING AT ANY LOCATIONS.
3. SECURITY CAMERA SYSTEM INSTALLER SHALL PROVIDE A CEILING MOUNTED INSTALLATION KIT RECOMMENDED BY THE MANUFACTURER OF THE CAMERA. EACH CEILING MOUNTED CAMERA KIT SHALL HAVE A SUPPORT WIRE ATTACHED TO THE BUILDING'S STRUCTURE TO PREVENT THE CAMERA FROM DROPPING TO THE FLOOR AT ANY TIME. AT NO POINT SHALL THE WEIGHT OF THE CEILING MOUNTED SECURITY CAMERA BE SUPPORTED BY THE CEILING GRID SYSTEM OR CEILING TILES. ALL CEILING MOUNTED CAMERAS SHALL BE FLUSH MOUNTED.
4. ALL EXTERIOR AND WALL MOUNTED CAMERA LOCATIONS AND MOUNTING HEIGHTS MUST BE COORDINATED WITH THE OWNER PRIOR TO ROUGH-IN. COORDINATION MEETINGS SHALL BE SCHEDULED THROUGH THE ARCHITECT'S PROJECT MANAGER.
5. PROVIDE AND INSTALL MAGNETIC DOOR CONTACT AT ALL ROOF HATCHES ON THE ENTIRE PROJECT. CONTACTS TO BE CONNECTED TO THE BUILDINGS INTRUSION DETECTION SYSTEM.

COORDINATE MONITORING REQUIREMENTS WITH THE INSTALLER FOR EACH SYSTEM AND THE OWNER. PROGRAM SYSTEM TO ALERT THE OWNER DESIGNATED PERSONNEL UPON A MONITORED ALARM EVENT

LOCAL SOUND SYSTEM LEGEND

SYMBOL	DESCRIPTION
LS *#	VENUE SPECIFIC LOCAL SOUND SYSTEM SPEAKER. *# TO BE REPLACED WITH NUMERIC VALUE INDICATING THE POSITION NUMBER OF THE VENUE SPECIFIC DEVICE.
LSC *#	VENUE SPECIFIC LOCAL SOUND SYSTEM CONTROL PLATE. *# TO BE REPLACED WITH NUMERIC VALUE INDICATING THE POSITION NUMBER OF THE VENUE SPECIFIC DEVICE.
MI *#	VENUE SPECIFIC LOCAL SOUND SYSTEM MICROPHONE INPUT. *# TO BE REPLACED WITH NUMERIC VALUE INDICATING THE POSITION NUMBER OF THE VENUE SPECIFIC DEVICE.
ABM *#	VENUE SPECIFIC LOCAL SOUND SYSTEM 3.5MM AUXILIARY INPUT AND BLUETOOTH MIXER. *# TO BE REPLACED WITH ALPHANUMERIC TEXT INDICATING THE ASSOCIATED VENUE AND MIXER NUMBER. CONTRACTOR TO PROVIDE AND INSTALL A RECESSED ENCLOSURE WITH FLUSH MOUNTED, LOCKABLE DOOR. DEVICE TO BE MOUNTED AT + 42" AFF.
RACK	INDICATED THE LOCATION OF THE VENUE SPECIFIC LOCAL SOUND SYSTEM HEAD END RACK. AMPLIFIERS, DSPS, AND ALL OTHER HEAD END EQUIPMENT SHALL BE INSTALLED IN THIS RACK/CABINET.
WA	WIRELESS MICROPHONE ANTENNA. REFERENCE SPECIFICATIONS FOR MORE INFORMATION.
ALA	ASSISTED LISTENING ANTENNA. REFERENCE SPECIFICATIONS FOR MORE INFORMATION.

NOTES:

1. REFERENCE SPECIFICATIONS FOR ADDITIONAL INFORMATION AND REQUIREMENTS

AUDIO/VIDEO LEGEND

'AV-*#'	INDICATES THAT THE DESIGNATED TECHNOLOGY OUTLET IS INTENDED FOR AN AUDIO/VIDEO (A/V) INPUT. CONTRACTOR TO PROVIDE AND INSTALL A FLOOR MOUNTED OR WALL MOUNTED BOX AS INDICATED. (1) 1.25" CONDUIT AND (1) 1" CONDUITS FROM THE BOX TO THE NEAREST, PLENUM ACCESSIBLE CEILING WITHIN THE SAME ROOM. ALL FLOOR AND WALL MOUNTED BOXES SHALL BE A MINIMUM OF 2-GANGS. *# - WHEN REPLACED WITH A '1' (AV-1) ONLY, THE OUTLET SHALL BE A STANDALONE, LOCAL INPUT TIED TO A LOCAL VIDEO DISPLAY (FSD, CMP, WMP, AV-2, ETC.). THIS OUTLET WILL NOT BE ASSOCIATED WITH ANY SYSTEM FOR ROUTING TO DISPLAYS LOCATED IN ANY OTHER PORTION OF THE PROJECT. IF NOT REPLACED WITH A '1' SEE THE NOTES AT THE BOTTOM OF THE LEGEND FOR ADDITIONAL INSTRUCTIONS.
'FSD-*#'	INDICATES THE LOCATION OF A FLAT PANEL VIDEO DISPLAY. CONTRACTOR TO PROVIDE AND INSTALL TWO (2) CATEGORY 6 UTP NETWORK CABLE TO ALL LOCATIONS SHOWN ON THE ENTIRE PROJECT. *# - WHEN REPLACED WITH A '1' (FSD-1) ONLY, THE OUTLET SHALL BE A STANDALONE AND ONLY HAVE THE CATEGORY 6 CABLE ROUTED TO IT, FROM THE MDF/IDF SERVING THE DEVICES AREA ROOM. *# - WHEN REPLACED WITH A '2' (FSD-2) ONLY, THE OUTLET SHALL HAVE THE CATEGORY 6 CABLE ROUTED TO IT, FROM THE MDF/IDF SERVING THE DEVICES AREA, AND THE CABLING FROM THE ASSOCIATED AV-1. *# - WHEN NOT REPLACED WITH A '1' OR '2', SEE THE "NOTES" SECTION AT THE END OF THIS LEGEND. EACH FSD OUTLET SHALL BE A 2-GANG BOX AND TWO (2) 1.25 CONDUITS STUBBING INTO THE ROOMS ACCESSIBLE CEILING. PROVIDE ONE DOUBLE-GANG FACEPLATE WITH TWO (2) DECORA PORTS. PROVIDE A DECORA STYLE INSERT THAT ACCEPTS THE STYLE OF DATA JACK BEING USED FOR STRUCTURED CABLING. WHEN THERE IS A LOCAL A/V INPUT ASSOCIATED WITH THE DISPLAY, PROVIDE A DECORA INSERT THAT CONFORMS WITH THE SYSTEMS SPECIFIED. OTHERWISE PROVIDE A BLANK INSERT IN THE SECOND PORT .
'IVD'	INDICATES THE LOCATION OF A WALL MOUNTED, INTERACTIVE VIDEO DISPLAY. PROVIDE AND INSTALL A/V CABLE FROM THE ASSOCIATED AV-1 AS PER SYSTEM SPECIFICATIONS. RACEWAY SHALL CONSIST OF A 2-GANG BOX AND TWO (2) 1.25 " CONDUITS STUBBING INTO THE ROOMS ACCESSIBLE CEILING. PROVIDE ONE DOUBLE-GANG FACEPLATE WITH TWO (2) DECORA PORTS. PROVIDE A DECORA STYLE INSERT THAT ACCEPTS THE STYLE OF DATA JACK BEING USED FOR STRUCTURED CABLING. WHEN THERE IS A LOCAL A/V INPUT ASSOCIATED WITH THE DISPLAY, PROVIDE A DECORA INSERT THAT CONFORMS WITH THE SYSTEMS SPECIFIED. OTHERWISE PROVIDE A BLANK INSERT IN THE SECOND PORT
AVC *#	INDICATES THE LOCATION OF AN AUDIO/VIDEO CONTROL PLATE. RACEWAY SHALL CONSIST OF ONE (1) A BACK BOX WITH A 1" CONDUIT ROUTING INTO THE ACCESSIBLE CEILING SPACE WITHIN THE SAME ROOM. AV SYSTEM INSTALLER TO COORDINATE THE CONTROL BACK BOX SIZE REQUIREMENT WITH THE PROJECT'S ELECTRICAL CONTRACTOR.
PS	LOCAL INSTRUCTIONAL SPACE PRESENTATION SPEAKER. REFERENCE SPECIFICATIONS FOR ADDITIONAL INFORMATION.
*#	INDICATES THE LOCATION OF A STREAMING CAMERA. CONTRACTOR TO PROVIDE AND INSTALL TWO (2) CATEGORY 6 UTP NETWORK CABLE TO ALL LOCATIONS SHOWN ON THE ENTIRE PROJECT. REFERENCE SPECIFICATION FOR ADDITIONAL INFORMATION.

NOTES:

A. IN THE EVENT THAT "*#" IS NOT DEFINED IN THE OUTLET DESCRIPTION, THE DEVICE SHALL BE CONSIDERED A STANDALONE DEVICE, SERVING THE SYSTEM WITHIN THE SAME SPACE OR THE FOLLOWING SHALL APPLY:

*# - UNLESS SPECIFICALLY NOTED OTHERWISE, THE FOLLOWING SHALL APPLY TO EACH DEVICE SHOWN ON THE ENTIRE PROJECT:

*# - SHALL BE REPLACED WITH ALPHABETICAL CHARACTERS THAT SHALL INDICATE THE SPECIFIC VENUE THAT THE DEVICE IS ASSOCIATED WITH.

*# - SHALL BE REPLACED WITH A NUMERIC VALUE THAT SHALL IDENTIFY THE SPECIFIC DEVICE WITHIN THE SPECIFIC VENUE.

B. THE AUDIO/VIDEO SYSTEM INTEGRATOR SHALL COORDINATE ALL BOX AND CONDUIT SIZE REQUIREMENTS PRIOR TO ROOUGH-IN BY THE PROJECTS ELECTRICAL CONTRACTOR.

C. REFERENCE SCOPE MATRIX AND PROJECT SPECIFICATIONS FOR INSTRUCTIONS REGARDING THE PROVIDING AND INSTALLATION OF VIDEO DISPLAYS, PROJECTORS, SCREENS, MOUNTS, AND LIFTS.

INTERCOM/CLOCK LEGEND

S	PROVIDE AND INSTALL A 2"2, TILE REPLACEMENT, CEILING MOUNTED, 25/70V INTERCOM SPEAKER. SPEAKER TO BE INSTALLED FLUSH WITH CEILING UNLESS NOTED OTHERWISE.
S2	PROVIDE AND INSTALL A 12" CEILING MOUNTED, 25/70V INTERCOM SPEAKER THAT IS TO BE FLUSH MOUNTED IN A SOLID CEILING ENVIRONMENT. SYSTEM INSTALLER TO PROVIDE BACK CANS TO PROJECTS ELECTRICAL CONTRACTOR FOR INSTALLATION. ON PROJECTS WITHOUT AN ELECTRICAL CONTRACTOR THE INSTALLER SHALL BE RESPONSIBLE FOR THE COMPLETE INSTALLATION INCLUDING BACK CANS AND ASSOCIATED RACEWAY.
S3	INTERIOR WALL MOUNTED, 25/70V INTERCOM SPEAKER INTERCOM SPEAKER. SPEAKER TO BE INSTALLED FLUSH WITH WALL UNLESS NOTED OTHERWISE. SYSTEM INSTALLER TO PROVIDE BACK CANS TO PROJECTS ELECTRICAL CONTRACTOR FOR INSTALLATION. ON PROJECTS WITHOUT AN ELECTRICAL CONTRACTOR THE INSTALLER SHALL BE RESPONSIBLE FOR THE COMPLETE INSTALLATION INCLUDING BACK CANS AND ASSOCIATED RACEWAY.
S4	EXTERIOR WALL MOUNTED INTERCOM PAGING HORN. PAGING HORN SHALL BE TAPPED AT 7 WATTS UNLESS NOTE OTHERWISE. SYSTEM INSTALLER TO PROVIDE BACK CANS TO PROJECTS ELECTRICAL CONTRACTOR FOR INSTALLATION. ON PROJECTS WITHOUT AN ELECTRICAL CONTRACTOR THE INSTALLER SHALL BE RESPONSIBLE FOR THE COMPLETE INSTALLATION INCLUDING BACK CANS AND ASSOCIATED RACEWAY. REFERENCE SHEET SPECIFICATIONS FOR MORE INFORMATION.
VC	PROVIDE AND INSTALL A WALL MOUNTED VOLUME CONTROL WITH EMERGENCY ANNOUNCEMENT PRIORITY OVERRIDE. VOLUME CONTROL SHALL BE INSTALLED WITH LEVEL ZERO ATTENUATING AT NO LESS THAN 10DB. DEVICE TO BE MOUNTED AT +48" AFF.
CB	PROVIDE AND INSTALL A WALL MOUNTED, INTERCOM CALL BUTTON. DEVICE TO BE MOUNTED AT +48" AFF
ACS	PROVIDE AND INSTALL AN ADMINISTRATIVE CALL STATION. DEVICE OUTLET TO BE INSTALLED IN THE WORKSTATION KNEE SPACE AND THE DEVICE SHALL RESIDE ON THE WORKSTATION SURFACE.
C	INDICATES THE LOCATION OF A SINGLE FACE SECONDARY TIME CLOCK. REFERENCE SPECIFICATIONS FOR ADDITIONAL INFORMATION. PROVIDE CABLING AS REQUIRED FOR THE TYPE OF CLOCK BEING INSTALLED: - IP BASED CLOCKS - PROVIDE ONE (1) CATEGORY 6 CABLE PER FACE - 12V/24V CLOCK TO BE POWERED VIA A CLOCK POWER SUPPLY AND CONNECTED TO THE SPECIFIED MASTER CLOCK. - 120V CLOCK SHALL BE POWERED VIA 120V ELECTRICAL OUTLET AT THE DEVICE LOCATION AND CONNECTED TO THE SPECIFIED MASTER CLOCK.
C2	INDICATES THE LOCATION OF A DUAL FACE SECONDARY TIME CLOCK. REFERENCE SPECIFICATIONS FOR ADDITIONAL INFORMATION. PROVIDE CABLING AS REQUIRED FOR THE TYPE OF CLOCK BEING INSTALLED: -IP BASED CLOCKS - PROVIDE ONE (1) CATEGORY 6 CABLE PER FACE - 12V/24V CLOCK TO BE POWERED VIA A CLOCK POWER SUPLY AND CONNECTED TO THE SPECIFIED MASTER CLOCK. -120V CLOCK SHALL BE POWERED VIA 120V ELECTRICAL OUTLET AT THE DEVICE LOCATION AND CONNECTED TO THE SPECIFIED MASTER CLOCK.

INTERCOM GENERAL NOTES

1. THE SYSTEM INSTALLER SHALL PROPERLY SUPPORT ALL INSTALLED SYSTEM CABLING FROM AN APPROVED CABLE SUPPORT SYSTEM AS DETAILED IN SPECIFICATIONS. NO CABLING SHALL BE ROUTED AND TIED DIRECTLY TO BUILDING STEEL, CEILING GRID SUPPORT, CONDUIT, PIPING, OR DUCTWORK. THE CABLE SUPPORT SYSTEM SHALL BE DIRECTLY CONNECTED TO THE BUILDING'S STEEL JOIST. AT LOCATIONS WHERE THE BOTTOM OF THE JOIST IS MORE THAN 5' ABOVE THE CEILING, THE SYSTEM INSTALLER SHALL PROVIDE AND INSTALL THREADED ROD AND ALL REQUIRED MATERIALS TO CONNECT THE THREADED ROD TO THE BUILDING STEEL AND THE CABLE SUPPORT SYSTEM TO THE THREADED ROD. CABLE PATHWAY SHALL NOT BE HIGHER THAN 5' ABOVE THE CEILING AT ANY LOCATIONS.
2. ALL EXTERIOR AND WALL MOUNTED SPEAKERS SHALL BE MOUNTED AT 10'-0" UNLESS OTHERWISE NOTED.
3. EXTERIOR SPEAKERS SHALL BE INDEPENDENTLY ZONED FROM INTERIOR SPEAKERS.
4. ALL WALL MOUNTED CALL INITIATING DEVICES SHALL BE INSTALLED AT ADA HEIGHT, MATCHING THE HEIGHT OF THE INSTALLED LIGHT SWITCHES.
5. PROVIDE AND INSTALL WALL MOUNTED VOLUME CONTROLS IN ALL OFFICES, CONFERENCE ROOMS, AND CLINICS.
6. ALL VOLUME CONTROLS SHALL BE CONFIGURED WITH EMERGENCY CALL OVERRIDE, ALLOWING EMERGENCY ANNOUNCEMENTS TO BE HEARD DESPITE THE POSITION OF THE VOLUME CONTROL
7. ALL 25/70V SPEAKERS SHALL BE CONNECTED TO A STANDARD PUNCH DOWN BLOCK LOCATED NEAR HEAD END EQUIPMENT AND THEN CONNECTED TO HEAD END EQUIPMENT.
8. CONTRACTOR TO TAP ALL EXTERIOR SPEAKERS AT 7 WATTS.
9. ALL EXTERIOR AND WALL MOUNTED SPEAKERS SHALL BE MOUNTED AT 10'-0" UNLESS OTHERWISE NOTED.

GENERAL NOTES

1. ALL 120V POWER REQUIRED FOR THE FUNCTIONALITY OF EACH SYSTEM SHALL BE A DEDICATED CIRCUIT AND ON EMERGENCY POWER WHEN AVAILABLE. PROJECTS ELECTRICAL CONTRACTOR SHALL BE RESPONSIBLE FOR ALL POWER TO MAIN CONTROL PANELS, REMOTE POWER SUPPLIES AND ALL HEAD END EQUIPMENT. SYSTEM INSTALLERS SHALL COORDINATE LOCATIONS AND CONNECTIONS WITH THE PROJECT'S ELECTRICAL CONTRACTOR.
2. THE PROJECT'S ELECTRICAL CONTRACTOR SHALL BE RESPONSIBLE FOR ALL CONDUITS, FLOOR BOX, BACK BOXES, JUNCTION BOXES, RACEWAYS, AND SLEEVES REQUIRED TO ESTABLISH CLEAR PATHWAYS FOR ALL SYSTEMS. ALL CONDUITS, SLEEVES, BOXES, AND RACEWAYS SHALL BE PROPERLY SIZED TO MAINTAIN A 40% MAXIMUM FILL RATIO. THE INSTALLER FOR EACH SYSTEM SHALL PROVIDE THE ELECTRICAL CONTRACTOR WITH SHOP DRAWINGS INDICATING LOCATIONS AND SIZES OF CONDUITS BEYOND THOSE SHOWN ON THE CONTRACT DOCUMENTS.
3. ALL EXPOSED SYSTEM'S WIRING OR WIRING ROUTING ACROSS NON-ACCESSIBLE CEILINGS SHALL BE ROUTED IN CONDUIT, PROVIDED AND INSTALLED BY THE PROJECT'S ELECTRICAL CONTRACTOR. SIZE CONDUIT AS REQUIRED TO ROUTE SYSTEMS WITH 40% CABLE FILL RATIO. MINIMUM CONDUIT SIZE SHALL BE 3/4".
4. EACH SYSTEM INSTALLER SHALL BE RESPONSIBLE FOR ENSURING ALL EXTERIOR WALL PENETRATIONS ARE PROPERLY SEALED TO PREVENT ANY MOISTURE FROM ENTERING BUILDING.
5. NO CONDUITS SHALL BE INSTALLED ON THE EXTERIOR OF THE BUILDING. IF EXTERIOR CONDUITS ARE REQUIRED FOR A COMPLETE INSTALLATION, EACH SYSTEM CONTRACTOR SHALL COORDINATE WITH THE PROJECTS CONSULTANT PRIOR TO ANY ROUGH-IN.
6. EACH SYSTEM INSTALLER SHALL PROVIDE AND INSTALL PROTECTIVE BUSHINGS ON ALL CONDUIT STUB OUTS AND SLEEVES TO PREVENT CABLE DAMAGE. BUSHING TO BE INSTALLED PRIOR TO CABLE INSTALLATION. CUTTING BUSHING AND INSTALLING AFTER CABLE IS INSTALLED WILL NOT BE EXCEPTED.
7. ALL CABLE SHALL BE ROUTED DOWN CORRIDORS, PARALLEL AND PERPENDICULAR TO THE BUILDING WALLS AND STRUCTURE. CABLE TO EACH DEVICE SHALL BRANCH OFF OF A MAIN CORRIDOR TRUNK. ROUTING CABLES THROUGH CLASSROOMS, OFFICES, STORAGE ROOMS, RESTROOMS OR ANY TYPE OF ROOM OTHER THAN A CORRIDOR WILL NOT BE ACCEPTED. ENTER ALL ROOMS ABOVE THE ASSOCIATED ROOM DOORWAY.

TECHNOLOGY GENERAL NOTES

1. CONTRACTOR SHALL COORDINATE WITH THE SYSTEM ENGINEER PRIOR TO THE INSTALLATION OF RACKS AND RACK EQUIPMENT. NO RACKS SHALL BE PERMANENTLY INSTALLED WITHOUT WRITTEN APPROVAL OF THE PROPOSED LOCATIONS.
2. THE SELECTED, INSTALLING CONTRACTOR MUST BE A CERTIFIED INTEGRATOR/INSTALLER AUTHORIZED BY THE SPECIFIED SYSTEM MANUFACTURER TO INSTALL THE CABLE PLANT AND CONNECTIVITY PRODUCTS. REFER TO SPECIFICATIONS FOR PRODUCT TYPE AND DESCRIPTION.
3. SYSTEM WIRING AND EQUIPMENT INSTALLATION SHALL BE IN ACCORDANCE WITH GOOD ENGINEERING PRACTICES AS ESTABLISHED BY ANSI/EIA/TIA, BICSI, AND THE NEC.
4. ALL WIRING SHALL MEET ALL STATE AND LOCAL ELECTRICAL CODES.
5. ALL TELECOMMUNICATIONS SYSTEMS EQUIPMENT AND MOUNTING LOCATIONS SHALL BE IN COMPLIANCE WITH ADA ACCESSIBILITY STANDARDS.
6. ALL INDUSTRY STANDARD CATEGORY 6 CABLING PRACTICES MUST BE FOLLOWED FOR ALL DATA CABLING.
7. ALL CABLES/WIRING ARE TO BE INSTALLED WITH A MINIMUM OF 12 INCHES OF SEPARATION FROM AC POWER CABLES, INTERCOM, FIRE ALARM, SECURITY CABLES IN ANY PARALLEL OPEN WIRE RUN.
8. ALWAYS CROSS OTHER SYSTEM CABLES AT A 90 DEGREE ANGLE.
9. ALL CABLES AND TERMINATION COMPONENTS SHALL BE MACHINE LABELED AT BOTH ENDS. LABEL ALL CABLES PER TS DRAWINGS AND/OR SPECIFICATIONS. FINAL CABLE/OUTLET IDENTIFICATION LABELS SHALL BE COORDINATED WITH THE OWNER AND ENGINEER .
10. CONTRACTOR TO PROVIDE LIGHTNING PROTECTION ON ALL COMMUNICATION CABLE BETWEEN BUILDINGS.
11. ALL EXPOSED CABLING ROUTED IN PLENUM SHALL BE PLENUM-RATED. ALL NON PLENUM-RATED CABLING INSTALLED IN PLENUM SPACES SHALL BE INSTALLED IN CONDUIT.
12. NO TERMINATION OR SPLICES SHALL BE INSTALLED IN OR ABOVE CEILINGS UNLESS NOTED NOTED OTHERWISE.
13. CONTRACTOR SHALL MAINTAIN WALL RATING WITH PROPER FIRE BLOCKING METHODS.
14. ALL CABLE INSTALLED SHALL ROUTE TO THE CENTER OF THE ROOM IN WHICH IT SERVES AND THEN TO THE OUTLET LOCATION IT IS INTENDED FOR. EACH CABLE SHALL HAVE A 10' SERVICE LOOP AT THE CENTER OF EACH ROOM AND A 3' SERVICE LOOP ABOVE EACH OUTLET LOCATION.
16. PROVIDE AND INSTALL ONE (1) CATEGORY 6 CABLE TO EACH VIDEO SURVEILLANCE CAMERA ON THE ENTIRE PROJECT. REFERENCE VIDEO SURVEILLANCE LEGEND, NOTES, FLOOR PLANS, DETAILS, AND SCHEDULE.
17. PROVIDE AND INSTALL ONE (1) CATEGORY 6 CABLE TO THE BUILDING'S ACCESS CONTROL HEAD END PANEL. TERMINATION OF THIS CABLE SHALL BE COORDINATED WITH THE SYSTEM INSTALLER.
18. PROVIDE AND INSTALL ONE (1) CATEGORY 6 CABLE TO THE BUILDING'S INTRUSION DETECTION PANEL. TERMINATION OF THIS CABLE SHALL BE COORDINATED WITH THE SYSTEM INSTALLER.
19. PROVIDE AND INSTALL ONE (1) CATEGORY 6 CABLE TO EACH LIGHTING CONTROL HUB ON THE ENTIRE PROJECT. COORDINATE EXACT QUANTITY AND LOCATIONS WITH THE LIGHTING CONTROL SYSTEM INSTALLER. CONTRACTOR TO ASSUME A MINIMUM OF TEN (10) PER PROJECT.
20. PROVIDE AND INSTALL TWO (2) CATEGORY 6 DATA CIRCUITS TO EACH FSD (ALL VARIATIONS OF), CMP, WMP, AND DS ON THE ENTIRE PROJECT. COORDINATE ANY DISCREPANCIES WITH ENGINEER.
21. PROVIDE AND INSTALL ONE (1) CATEGORY 6 DATA CIRCUIT TO THE LOCAL AIR UNIT CONTROLLER IN EACH MDF AND IDF.
22. PROVIDE AND INSTALL ONE (1) CATEGORY 6 DATA CIRCUIT TO EACH ACCESS CONTROL VIDEO DOOR STATION AND MASTER STATION ON THE ENTIRE PROJECT. COORDINATE EXACT LOCATION AND TERMINATION REQUIREMENTS WITH THE DOOR STATION INSTALLER, PRIOR TO INSTALLATION.

RESPONSIBILITY MATRIX

SCOPE ITEM	RESPONSIBILITY			NOTES
COMMUNICATIONS - DIVISION 27	OFOI	CFCI	OFCI	
CATEGORY 6 STRUCTURED CABLING SYSTEM		X		
BUILDING INTERCOM/PA, BELL, AND CLOCK SYSTEM		X		
NETWORK EQUIPMENT				
→ MDF/IDF NETWORK EQUIPMENT		X		
→ VOIP TELEPHONES		X		
→ WIRELESS ACCESS POINTS		X		
→ UNITERRUPTABLE POWER SUPPLIES (UPS)		X		
RACEWAY: CONDUIT, BACK BOXES, SLEEVES, ETC.		X		SEE NOTE 1.
ELECTRICAL POWER		X		SEE NOTE 1.
LIFE SAFETY AND SECURITY - DIVISION 28	OFOI	CFCI	OFCI	
ACCESS CONTROL SYSTEM(ACS)		X		
INTRUSION DETECTION SYSTEM		X		
VIDEO SURVEILLANCE SYSTEM (VSS)				
→ VSS SERVERS		X		
→ VSS CAMERAS		X		
→ VSS PROGRAMMING		X		
→ VSS CABLING		X		SEE NOTE 2.
FIRE ALARM SMOKE DETECTION WITH VOICE EVACUATION		X		SEE NOTE 1.
RACEWAY: CONDUIT, BACK BOXES, SLEEVES, ETC.		X		SEE NOTE 1.
ELECTRICAL POWER		X		SEE NOTE 1.

OFOI - OWNER FURNISHED AND OWNER INSTALLED
CFCI - CONTRACTOR FURNISHED AND CONTRACTOR INSTALLED
OFCI - OWNER FURNISHED AND CONTRACTOR INSTALLED

REPONSIBILITY MATRIX NOTES:

1. BY DIVISION 26.
2. BY DIVISION 27.

SUBSCRIPTS AND ABBREVIATIONS

'WM'	INDICATES THAT THE DESIGNATED DEVICE IS TO BE WALL MOUNTED AT SPECIFIED HEIGHT OR IN COMPLIANCE WITH CODE REQUIREMENTS. ALL WALL MOUNTED HEIGHTS ARE TO BE CONFIRMED WITH THE PROJECT'S ARCHITECT PRIOR TO ROUGH-IN.
'WP'	INDICATES THAT THE DESIGNATED DEVICE SHALL BE WEATHER PROOF AND RATED FOR EXTERIOR CONDITIONS INSTALLATION.
'AC'	INDICATES THAT THE DESIGNATED DEVICE IS TO BE INSTALLED ABOVE THE COUNTERTOP. A NUMERIC VALUE SHALL REPLACE THE '#' SYMBOL AND SHALL DESIGNATE THE SPECIFIC HEIGHT ABOVE COUNTER. ALL HEIGHTS ARE TO BE CONFIRMED WITH THE PROJECT'S ARCHITECT PRIOR TO ROUGH-IN.
'AFF'	INDICATES THAT THE DESIGNATED DEVICE IS TO BE INSTALLED ABOVE THE FINISHED FLOOR. A NUMERIC VALUE SHALL REPLACE THE '#' SYMBOL AND SHALL DESIGNATE THE SPECIFIC HEIGHT ABOVE FINISHED FLOOR. ALL HEIGHTS ARE TO BE CONFIRMED WITH THE PROJECT'S ARCHITECT PRIOR TO ROUGH-IN.
'UC'	INDICATES THAT THE DESIGNATED DEVICE IS TO BE MOUNTED ON THE UNDERSIDE OF THE ELEVATED CANOPY.
'CM'	INDICATES THAT THE DESIGNATED DEVICE IS TO BE CORNER MOUNTED AT SPECIFIED HEIGHT. ALL WALL MOUNTED HEIGHTS ARE TO BE CONFIRMED WITH THE PROJECT'S ARCHITECT PRIOR TO ROUGH-IN.
	FIELD COORDINATE ELEVATION.

FIRE ALARM LEGEND

FACP	FIRE ALARM CONTROL
FAA	FIRE ALARM ANNUNCIATOR PANEL
NAC	NOTIFICATION APPLIANCE CIRCUIT

NOTES:

1. FIRE ALARM SYSTEM IS A PERFORMANCE BASED PER SHEET SPEC ON T603. CONTRACTOR TO REFERENCE SPECIFICATIONS FOR ADDITIONAL INFORMATION.
2. A LICENSED FIRE ALARM PLANNING SUPERINTENDENT CERTIFIED TO A MINIMUM LEVEL 3, IN THE SUBFIELD OF FIRE ALARM SYSTEMS THROUGH THE NATIONAL INSTITUTE FOR CERTIFICATION IN ENGINEERING TECHNOLOGIES (NICET), SHALL PROVIDE PLANS AND CALCULATIONS FOR A MANUAL AND AUTOMATIC FIRE DETECTION AND ALARM SYSTEM TO COMPLY WITH THE BUILDING SPACE LAYOUT, BUILDING OCCUPANCY, CURRENT NFPA 72, LOCAL AND STATE CODE REQUIREMENTS, AND THE FIRE ALARM AND DETECTION SYSTEM SPECIFICATIONS.
3. PROJECT SCOPE INCLUDES REPLACING AND UPGRADING THE EXISTING FIRE ALARM SYSTEM. FIRE ALARM SYSTEM SHALL BE FULLY OPERATIONAL THROUGHOUT ALL PHASES OF CONSTRUCTION.

NOTES TO CONTRACTOR

1. EVERY SYMBOL SHOWN ON LEGEND MAY NOT APPEAR ON DRAWINGS. REFER TO GENERAL ELECTRICAL NOTES FOR WALL-MOUNTED DEVICE MOUNTING HEIGHTS.
2. REFERENCE SPECIFICATIONS FOR MATERIALS AND METHODS.
3. COMPLETE INSTALLATION OF ALL PRODUCTS SHALL BE IN COMPLIANCE WITH ALL CODES, INDUSTRY STANDARDS, COMMON PRACTICES AND MANUFACTURER'S INSTRUCTIONS.
4. ALL EXTERIOR AND WALL MOUNTED CAMERA LOCATIONS AND MOUNTING HEIGHTS MUST BE COORDINATED WITH THE OWNER PRIOR TO ROUGH-IN. COORDINATION MEETINGS SHALL BE SCHEDULED THROUGH THE ARCHITECT'S PROJECT MANAGER.

Salas O'Brien
2600 Van Buren St., Suite 2635
Norman, OK 73072
Salas O'Brien Registration: CA# 7058
Expiration Date : 6/30/2025
Salas O'Brien Project Number: 2023-02792-00

AGP
the Abla Griffin Partnership L.L.C.
201 N. BROADWAY
SUITE 210
MOORE, OK. 73160
405.735.3477
AGP@theAGP.net
www.theAGP.net

CEDAR CREEK
CIVIL

KFC ENGINEERING
STRUCTURAL

SALAS O'BRIEN
MECHANICAL / ELECTRICAL

NY
drawn by

NY
checked by

JULY 2023
date

revisions

MOORE PUBLIC SCHOOLS
BOARD OF EDUCATION
MOORE, OKLAHOMA

MOORE Public Schools
LEARNING FOR LIFE

CLASSROOM ADDITION
HIGHLAND WEST
JUNIOR HIGH SCHOOL

sheet no:

T000

OWNERSHIP USE OF DOCUMENTS:

AGP EXPRESSLY RESERVES ITS COPYRIGHT AND OTHER PROPERTY RIGHTS OF ALL PLANS AND DRAWINGS DESIGNED AND/OR PRODUCED. PLANS AND DRAWINGS ARE NOT TO BE REPRODUCED IN ANY FORM OR MANNER WITHOUT THE EXPRESSED WRITTEN CONSENT OF AGP.

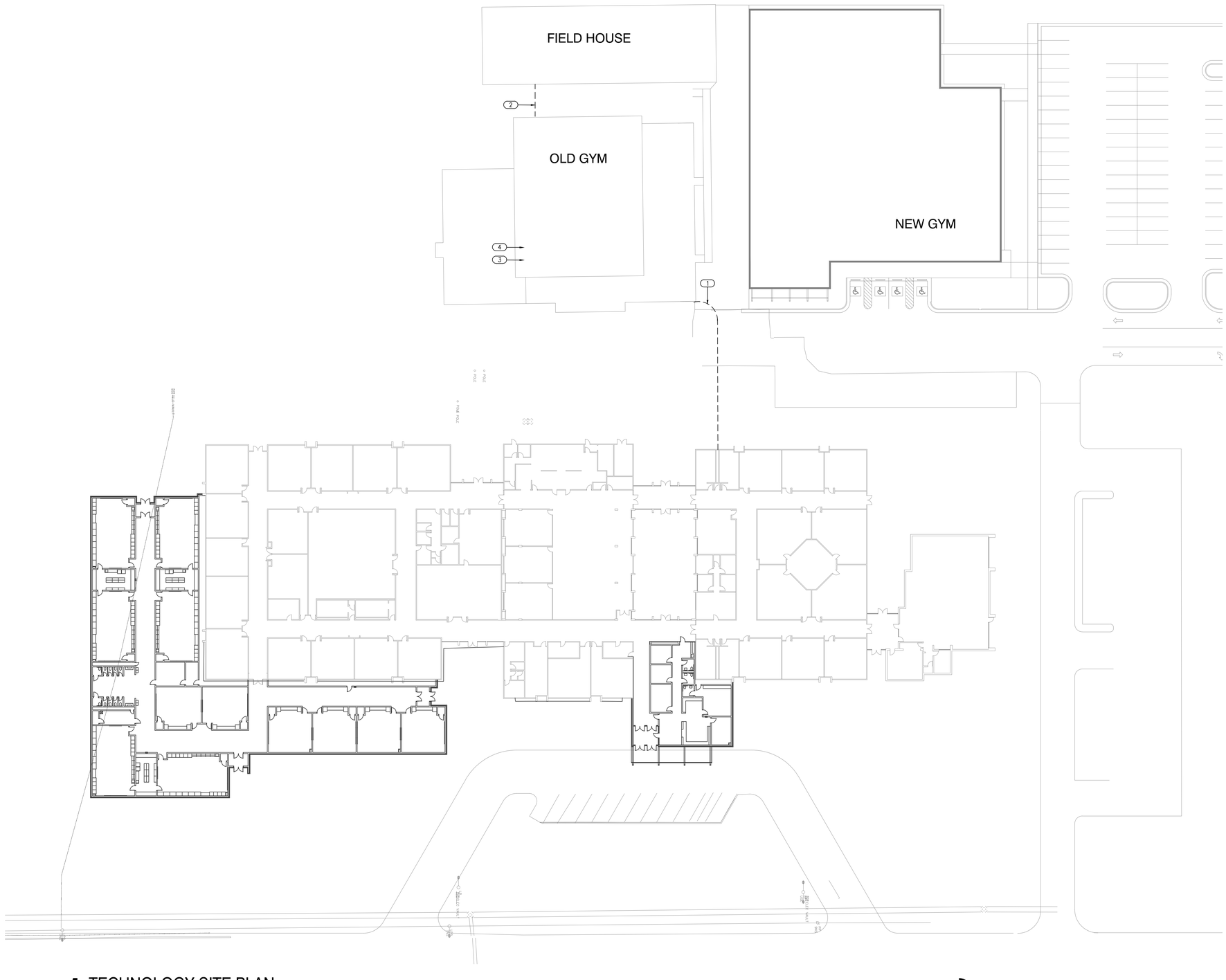

SECURITY GENERAL NOTES

A. REPLACE EXISTING OLD GYM DSC 4020 SECURITY ALARM MAIN CONTROL WITH A DSC 4204 POWER SUPPLY & DSC 4116 ZONE EXPANDER AND CONNECT TO THE MAIN BUILDING DSC 4020 SECURITY ALARM MAIN CONTROL PANEL VIA (2) 4 CONDUCTOR 16 GAUGE NON-SHIELDED CABLES. USE EXISTING EMPTY 2 INCH CONDUITS BETWEEN THE OLD GYM & MAIN BUILDING. PROGRAM SECURITY SYSTEM AS NEEDED TO MAKE ONE WORKING SECURITY ALARM SYSTEM FOR THE ENTIRE CAMPUS. PROGRAM A SEPARATE PARTITION FOR THE OLD GYM.

FIRE GENERAL NOTES

A. REPLACE EXISTING OLD GYM & FIELDHOUSE SILENT KNIGHT 5820XL FIRE ALARM MAIN CONTROL WITH A SILENT KNIGHT 5895XL POWER SUPPLY AND CONNECT TO THE MAIN BUILDING FIRE ALARM MAIN CONTROL PANEL VIA (2) 4 CONDUCTOR 16 GAUGE NON-SHIELDED CABLES. USE EXISTING EMPTY 2 INCH CONDUITS BETWEEN THE OLD GYM & MAIN BUILDING. PROGRAM FIRE SYSTEM AS NEEDED TO MAKE ONE WORKING FIRE ALARM SYSTEM FOR THE ENTIRE CAMPUS.CONTRACTOR TO PROVIDE AND INSTALL ADDITIONAL SMOKE DETECTORS IN OLD GYMNASIUM BASKETBALL COURT

B. PROJECT SCOPE INCLUDES A FULL FIRE ALARM SYSTEM REPLACEMENT AND UPGRADE FOR THE JUNIOR HIGH SCHOOL MAIN CAMPUS. REFERENCE SHEET SPECIFICATION ON SHEET T603 FOR ADDITIONAL INFORMATION.

C. A LICENSED FIRE ALARM PLANNING SUPERINTENDENT CERTIFIED TO A MINIMUM LEVEL 3, IN THE SUBFIELD OF FIRE ALARM SYSTEMS THROUGH THE NATIONAL INSTITUTE FOR CERTIFICATION IN ENGINEERING TECHNOLOGIES (NICET), SHALL PROVIDE PLANS AND CALCULATIONS FOR A MANUAL AND AUTOMATIC FIRE DETECTION AND ALARM SYSTEM TO COMPLY WITH THE BUILDING SPACE LAYOUT, BUILDING OCCUPANCY, CURRENT NFPA 72, LOCAL AND STATE CODE REQUIREMENTS, AND THE FIRE ALARM AND DETECTION SYSTEM SPECIFICATIONS.

KEYED NOTES

1. APPROXIMATE LOCATION OF EXISTING 2" UNDERGROUND CONDUIT.
2. APPROXIMATE LOCATION OF EXISTING CONDUIT
3. APPROXIMATE LOCATION OF EXISTING OLD GYM DSC 4020 MAIN CONTROL.
4. APPROXIMATE LOCATION OF EXISTING OLD GYM AND FIELD HOUSE SILENT KNIGHT 5820 XL MAIN CONTROL.

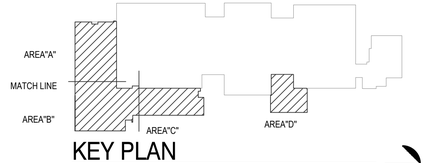

KEY PLAN

NORTH

1 TECHNOLOGY SITE PLAN

SCALE: 1/32" = 1'-0"

NORTH

AGP
the Abla Griffin Partnership L.L.C.

201 N. BROADWAY
SUITE 210
MOORE, OK. 73160
405.735.3477
AGP@theAGP.net
www.theAGP.net

CEDAR CREEK
CIVIL

KFC ENGINEERING
STRUCTURAL

SALAS O'BRIEN
MECHANICAL / ELECTRICAL

NY
drawn by

NY
checked by

JULY 2023
date

revisions

MOORE PUBLIC SCHOOLS
BOARD OF EDUCATION
MOORE, OKLAHOMA

MOORE Public Schools
LEARNING FOR LIFE

CLASSROOM ADDITION
HIGHLAND WEST
JUNIOR HIGH SCHOOL

sheet no:

T100

Salas O'Brien
2600 Van Buren St., Suite 2635
Norman, OK 73072
Salas O'Brien Registration: CA# 7058
Expiration Date : 6/30/2025
Salas O'Brien Project Number: 2023-02792-00

OWNERSHIP USE OF DOCUMENTS:

AGP EXPRESSLY RESERVES ITS COPYRIGHT AND OTHER PROPERTY RIGHTS OF ALL PLANS AND DRAWINGS DESIGNED AND/OR PRODUCED. PLANS AND DRAWINGS ARE NOT TO BE REPRODUCED IN ANY FORM OR MANNER WITHOUT THE EXPRESSED WRITTEN CONSENT OF AGP.

SECURITY GENERAL NOTES

A. REPLACE EXISTING OLD GYM DSC 4020 SECURITY ALARM MAIN CONTROL WITH A DSC 4204 POWER SUPPLY & DSC 4116 ZONE EXPANDER AND CONNECT TO THE MAIN BUILDING DSC 4020 SECURITY ALARM MAIN CONTROL PANEL VIA (2) 4 CONDUCTOR 16 GAUGE NON-SHIELDED CABLES. USE EXISTING EMPTY 2 INCH CONDUITS BETWEEN THE OLD GYM & MAIN BUILDING. PROGRAM SECURITY SYSTEM AS NEEDED TO MAKE ONE WORKING SECURITY ALARM SYSTEM FOR THE ENTIRE CAMPUS. PROGRAM A SEPARATE PARTITION FOR THE OLD GYM.

FIRE GENERAL NOTES

A. REPLACE EXISTING OLD GYM & FIELDHOUSE SILENT KNIGHT 5820XL FIRE ALARM MAIN CONTROL WITH A SILENT KNIGHT 5895XL POWER SUPPLY AND CONNECT TO THE MAIN BUILDING FIRE ALARM MAIN CONTROL PANEL VIA (2) 4 CONDUCTOR 16 GAUGE NON-SHIELDED CABLES. USE EXISTING EMPTY 2 INCH CONDUITS BETWEEN THE OLD GYM & MAIN BUILDING. PROGRAM FIRE SYSTEM AS NEEDED TO MAKE ONE WORKING FIRE ALARM SYSTEM FOR THE ENTIRE CAMPUS. CONTRACTOR TO PROVIDE AND INSTALL ADDITIONAL SMOKE DETECTORS IN OLD GYMNASIUM BASKETBALL COURT

B. PROJECT SCOPE INCLUDES A FULL FIRE ALARM SYSTEM REPLACEMENT AND UPGRADE FOR THE JUNIOR HIGH SCHOOL MAIN CAMPUS. REFERENCE SHEET SPECIFICATION ON SHEET T603 FOR ADDITIONAL INFORMATION.

FIRE ALARM UPGRADE NOTES

JUNIOR HIGH SCHOOL FIRE ALARM SYSTEM, FACP, DEVICES AND WIRING IS TO BE REPLACED AND UPGRADED IN ACCORDANCE WITH SHEET SPECIFICATIONS.

FIRE ALARM CONTRACTOR TO PROVIDE AND INSTALL ADDITIONAL STROBE DEVICES IN ALL CLASSROOMS.

KEYED NOTES

1. EXISTING LOCATION OF INTERCOM HEAD END UNIT.
2. EXISTING LOCATION OF FIRE ALARM MAIN CONTROL PANEL.
3. EXISTING SECURITY ALARM MAIN PANEL.
4. EXISTING LOCATION OF MDF.

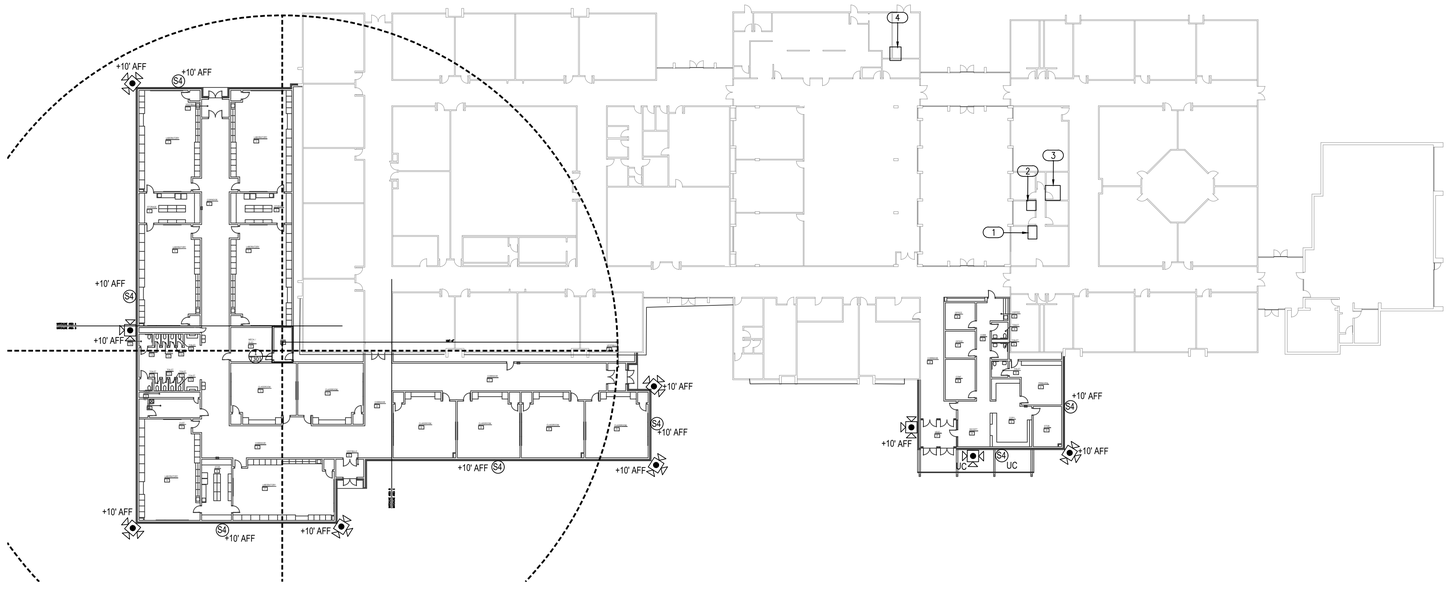

1 TECHNOLOGY SITE PLAN - ENLARGED

SCALE: 1/32" = 1'-0"

NORTH

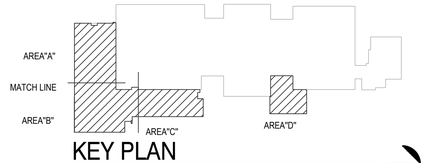

KEY PLAN

NORTH

AGP
the Abla Griffin Partnership L.L.C.

201 N. BROADWAY
SUITE 210
MOORE, OK. 73160
405.735.3477
AGP@theAGP.net
www.theAGP.net

CEDAR CREEK
CIVIL

KFC ENGINEERING
STRUCTURAL

SALAS O'BRIEN
MECHANICAL / ELECTRICAL

NY
drawn by

NY
checked by

JULY 2023
date

revisions

MOORE PUBLIC SCHOOLS
BOARD OF EDUCATION
MOORE, OKLAHOMA

MOORE Public Schools
LEARNING FOR LIFE

CLASSROOM ADDITION
HIGHLAND WEST
JUNIOR HIGH SCHOOL

sheet no:

T101

Salas O'Brien
2600 Van Buren St., Suite 2635
Norman, OK 73072
Salas O'Brien Registration: CA# 7058
Expiration Date : 6/30/2025
Salas O'Brien Project Number: 2023-02792-00

OWNERSHIP USE OF DOCUMENTS:

AGP EXPRESSLY RESERVES ITS COPYRIGHT AND OTHER PROPERTY RIGHTS OF ALL PLANS AND DRAWINGS DESIGNED AND/OR PRODUCED. PLANS AND DRAWINGS ARE NOT TO BE REPRODUCED IN ANY FORM OR MANNER WITHOUT THE EXPRESSED WRITTEN CONSENT OF AGP.

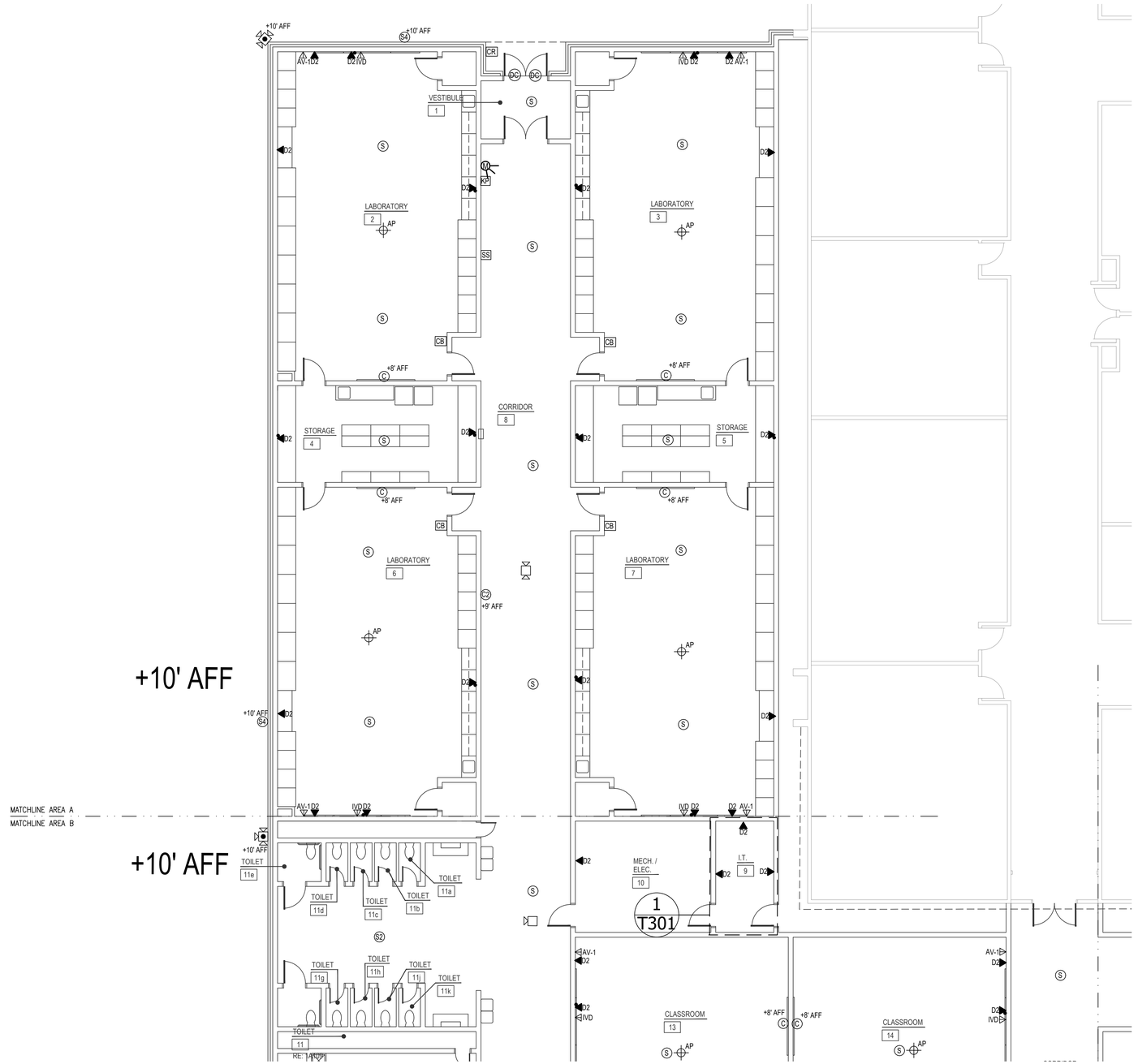

1 CLASSROOMS - AREA A
SCALE: 1/8" = 1'-0"

NORTH

GENERAL NOTES

1. FIRE: CONNECT NEW FIRE ALARM DEVICES TO NEW MAIN BUILDING SILENT KNIGHT FIRE ALARM SYSTEM. SUPPLY ALL POWER SUPPLIES NAC PANELS, ETC NEEDED. PLEASE SEE FIRE ALARM SPECIFICATIONS FOR PART NUMBERS AND SYSTEM REQUIREMENTS.
2. SECURITY: CONNECT NEW SECURITY ALARM DEVICES TO NEW DSC 4204 POWER SUPPLY AND DSC 4116 ZONE EXPANDER. CONNECT NEW DSC 4204 POWER SUPPLY AND DSC 4116 ZONE EXPANDER TO EXISTING MAIN BUILDING DSC 4020. CONNECT WITH 2-4 CONDUCTOR 16 GAUGE NON-SHIELDED CABLES. PROGRAM AS NEEDED TO COMPLETE CONNECTION.
3. DATA: CONNECT NEW DATA, WIFI AND CAMERA NETWORK DROPS TO NEW IDF. CONNECT NEW IDF TO EXISTING MAIN BUILDING MDF VIA FIBER AND CAT 6. SEE NETWORK SPECS FOR FIBER AND CAT 6 INFO.
4. INTERCOM: CONNECT NEW INTERCOM DEVICES TO EXISTING TELECOR SYSTEM. PROVIDE TELECOR CLOCK DRIVER AS NEEDED.
5. CLOCK: CONNECT NEW CLOCK DEVICES TO EXISTING TELECOR SYSTEM. PROVIDE TELECOR CLOCK DRIVER AS NEEDED.
6. ACCESS CONTROL: CONNECT NEW ACCESS CONTROL DEVICES TO NEW KEYSCAN CONTROLLER.
7. CAMERAS: CONNECT NEW CAMERAS TO NEW IDF. SEE CAMERA SPECIFICATIONS FOR MOUNTING LOCATION.

FIRE ALARM

A. FIRE ALARM SYSTEM IS A PERFORMANCE BASED PER SHEET SPECIFICATIONS. CONTRACTOR TO REFERENCE SHEET T603 FOR ADDITIONAL INFORMATION.

B. A LICENSED FIRE ALARM PLANNING SUPERINTENDENT CERTIFIED TO A MINIMUM LEVEL 3, IN THE SUBFIELD OF FIRE ALARM SYSTEMS THROUGH THE NATIONAL INSTITUTE FOR CERTIFICATION IN ENGINEERING TECHNOLOGIES (NICET), SHALL PROVIDE PLANS AND CALCULATIONS FOR A MANUAL AND AUTOMATIC FIRE DETECTION AND ALARM SYSTEM TO COMPLY WITH THE BUILDING SPACE LAYOUT, BUILDING OCCUPANCY, CURRENT NFPA 72, LOCAL AND STATE CODE REQUIREMENTS, AND THE FIRE ALARM AND DETECTION SYSTEM SPECIFICATIONS.

C. CONTRACTOR TO ADD ADDITIONAL STROBE DEVICE TO ALL CLASSROOMS.

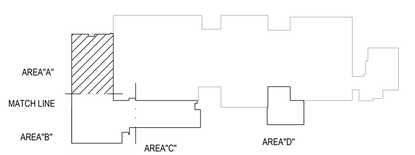

KEY PLAN

NORTH

AGP
the Abla Griffin Partnership L.L.C.
201 N. BROADWAY
SUITE 210
MOORE, OK. 73160
405.735.3477
AGP@theAGP.net
www.theAGP.net

CEDAR CREEK
CIVIL

KFC ENGINEERING
STRUCTURAL

SALAS O'BRIEN
MECHANICAL / ELECTRICAL

NY
drawn by

NY
checked by

JULY 2023
date

revisions

MOORE PUBLIC SCHOOLS
BOARD OF EDUCATION
MOORE, OKLAHOMA

MOORE Public Schools
LEARNING FOR LIFE

CLASSROOM ADDITION
HIGHLAND WEST
JUNIOR HIGH SCHOOL

sheet no:

T201

Salas O'Brien
2600 Van Buren St., Suite 2635
Norman, OK 73072
Salas O'Brien Registration: CA# 7058
Expiration Date : 6/30/2025
Salas O'Brien Project Number: 2023-02792-00

OWNERSHIP USE OF DOCUMENTS:

AGP EXPRESSLY RESERVES ITS COPYRIGHT AND OTHER PROPERTY RIGHTS OF ALL PLANS AND DRAWINGS DESIGNED AND/OR PRODUCED. PLANS AND DRAWINGS ARE NOT TO BE REPRODUCED IN ANY FORM OR MANNER WITHOUT THE EXPRESSED WRITTEN CONSENT OF AGP.

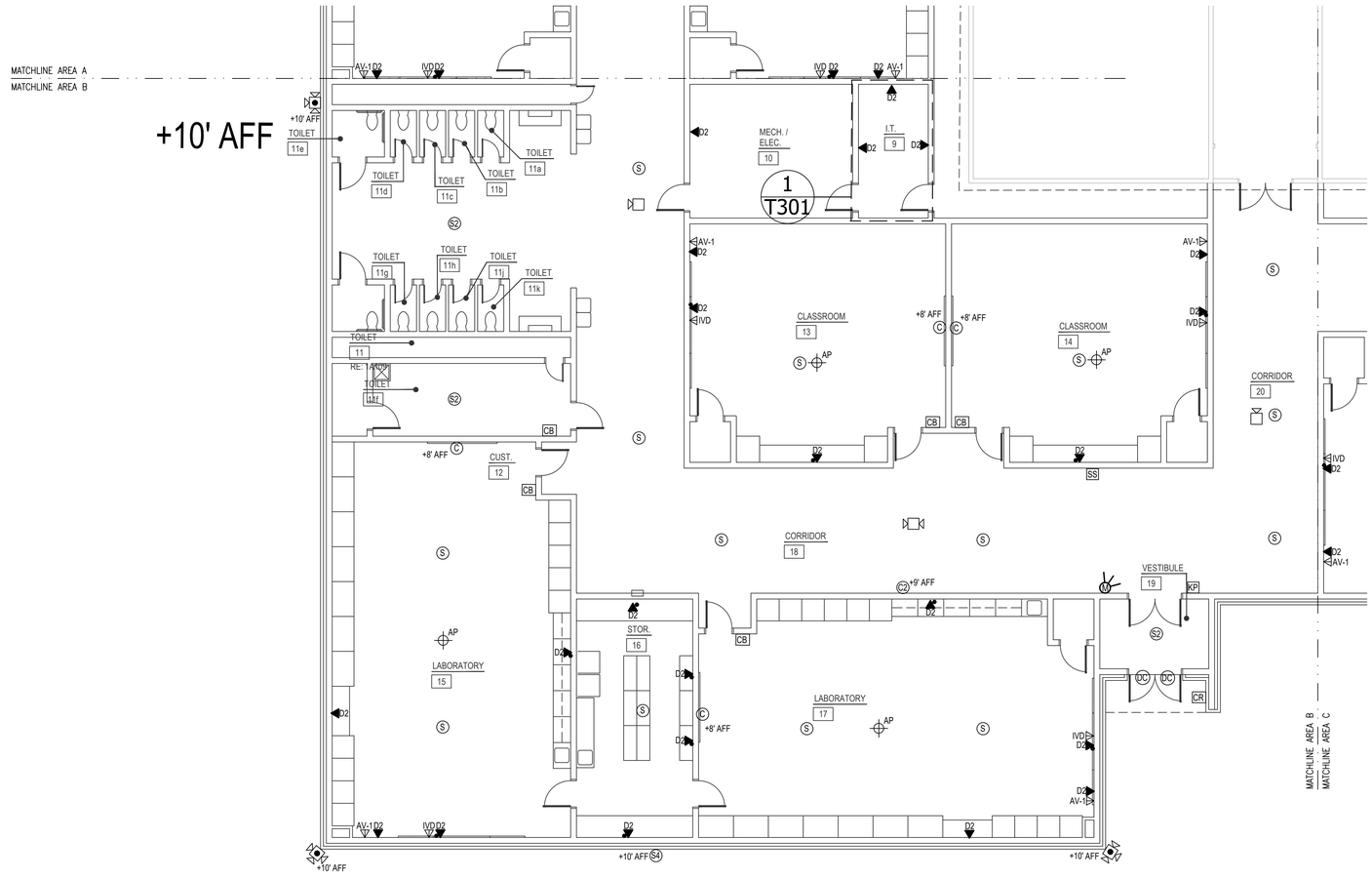

1 CLASSROOMS - AREA B

SCALE: 1/8" = 1'-0"

NORTH

GENERAL NOTES

1. FIRE: CONNECT NEW FIRE ALARM DEVICES TO NEW MAIN BUILDING SILENT KNIGHT FIRE ALARM SYSTEM. SUPPLY ALL POWER SUPPLIES NAC PANELS, ETC NEEDED. PLEASE SEE FIRE ALARM SPECIFICATIONS FOR PART NUMBERS AND SYSTEM REQUIREMENTS.
2. SECURITY: CONNECT NEW SECURITY ALARM DEVICES TO NEW DSC 4204 POWER SUPPLY AND DSC 4116 ZONE EXPANDER. CONNECT NEW DSC 4204 POWER SUPPLY AND DSC 4116 ZONE EXPANDER TO EXISTING MAIN BUILDING DSC 4020. CONNECT WITH 2-4 CONDUCTOR 16 GAUGE NON-SHIELDED CABLES. PROGRAM AS NEEDED TO COMPLETE CONNECTION.
3. DATA: CONNECT NEW DATA, WIFI AND CAMERA NETWORK DROPS TO NEW IDF. CONNECT NEW IDF TO EXISTING MAIN BUILDING MDF VIA FIBER AND CAT 6. SEE NETWORK SPECS FOR FIBER AND CAT 6 INFO.
4. INTERCOM: CONNECT NEW INTERCOM DEVICES TO EXISTING TELECOR SYSTEM. PROVIDE TELECOR CLOCK DRIVER AS NEEDED.
5. CLOCK: CONNECT NEW CLOCK DEVICES TO EXISTING TELECOR SYSTEM. PROVIDE TELECOR CLOCK DRIVER AS NEEDED.
6. ACCESS CONTROL: CONNECT NEW ACCESS CONTROL DEVICES TO NEW KEYSCAN CONTROLLER.
7. CAMERAS: CONNECT NEW CAMERAS TO NEW IDF. SEE CAMERA SPECIFICATIONS FOR MOUNTING LOCATION.

FIRE ALARM

A. FIRE ALARM SYSTEM IS A PERFORMANCE BASED PER SHEET SPECIFICATIONS. CONTRACTOR TO REFERENCE SHEET T603 FOR ADDITIONAL INFORMATION.

B. A LICENSED FIRE ALARM PLANNING SUPERINTENDENT CERTIFIED TO A MINIMUM LEVEL 3, IN THE SUBFIELD OF FIRE ALARM SYSTEMS THROUGH THE NATIONAL INSTITUTE FOR CERTIFICATION IN ENGINEERING TECHNOLOGIES (NICET), SHALL PROVIDE PLANS AND CALCULATIONS FOR A MANUAL AND AUTOMATIC FIRE DETECTION AND ALARM SYSTEM TO COMPLY WITH THE BUILDING SPACE LAYOUT, BUILDING OCCUPANCY, CURRENT NFPA 72, LOCAL AND STATE CODE REQUIREMENTS, AND THE FIRE ALARM AND DETECTION SYSTEM SPECIFICATIONS.

C. CONTRACTOR TO ADD ADDITIONAL STROBE DEVICE TO ALL CLASSROOMS.

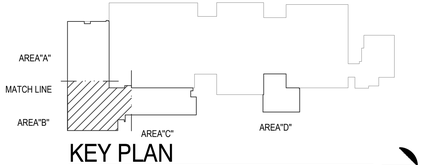

KEY PLAN

NORTH

AGP
the Abla Griffin Partnership L.L.C.
201 N. BROADWAY
SUITE 210
MOORE, OK. 73160
405.735.3477
AGP@theAGP.net
www.theAGP.net

CEDAR CREEK
CIVIL

KFC ENGINEERING
STRUCTURAL

SALAS O'BRIEN
MECHANICAL / ELECTRICAL

NY
drawn by

NY
checked by

JULY 2023
date

revisions

MOORE PUBLIC SCHOOLS
BOARD OF EDUCATION
MOORE, OKLAHOMA

MOORE Public Schools
LEARNING FOR LIFE

CLASSROOM ADDITION
HIGHLAND WEST
JUNIOR HIGH SCHOOL

sheet no:

T202

Salas O'Brien
2600 Van Buren St., Suite 2635
Norman, OK 73072
Salas O'Brien Registration: CA# 7058
Expiration Date : 6/30/2025
Salas O'Brien Project Number: 2023-02792-00

OWNERSHIP USE OF DOCUMENTS:

AGP EXPRESSLY RESERVES ITS COPYRIGHT AND OTHER PROPERTY RIGHTS OF ALL PLANS AND DRAWINGS DESIGNED AND/OR PRODUCED. PLANS AND DRAWINGS ARE NOT TO BE REPRODUCED IN ANY FORM OR MANNER WITHOUT THE EXPRESSED WRITTEN CONSENT OF AGP.

GENERAL NOTES

1. FIRE: CONNECT NEW FIRE ALARM DEVICES TO NEW MAIN BUILDING SILENT KNIGHT FIRE ALARM SYSTEM. SUPPLY ALL POWER SUPPLIES NAC PANELS, ETC NEEDED. PLEASE SEE FIRE ALARM SPECIFICATIONS FOR PART NUMBERS AND SYSTEM REQUIREMENTS.
2. SECURITY: CONNECT NEW SECURITY ALARM DEVICES TO NEW DSC 4204 POWER SUPPLY AND DSC 4116 ZONE EXPANDER. CONNECT NEW DSC 4204 POWER SUPPLY AND DSC 4116 ZONE EXPANDER TO EXISTING MAIN BUILDING DSC 4020. CONNECT WITH 2-4 CONDUCTOR 16 GAUGE NON-SHIELDED CABLES. PROGRAM AS NEEDED TO COMPLETE CONNECTION.
3. DATA: CONNECT NEW DATA, WIFI AND CAMERA NETWORK DROPS TO NEW IDF. CONNECT NEW IDF TO EXISTING MAIN BUILDING MDF VIA FIBER AND CAT 6. SEE NETWORK SPECS FOR FIBER AND CAT 6 INFO.
4. INTERCOM: CONNECT NEW INTERCOM DEVICES TO EXISTING TELECOR SYSTEM. PROVIDE TELECOR CLOCK DRIVER AS NEEDED.
5. CLOCK: CONNECT NEW CLOCK DEVICES TO EXISTING TELECOR SYSTEM. PROVIDE TELECOR CLOCK DRIVER AS NEEDED.
6. ACCESS CONTROL: CONNECT NEW ACCESS CONTROL DEVICES TO NEW KEYSCAN CONTROLLER.
7. CAMERAS: CONNECT NEW CAMERAS TO NEW IDF. SEE CAMERA SPECIFICATIONS FOR MOUNTING LOCATION.

FIRE ALARM

A. FIRE ALARM SYSTEM IS A PERFORMANCE BASED PER SHEET SPECIFICATIONS. CONTRACTOR TO REFERENCE SHEET T603 FOR ADDITIONAL INFORMATION.

B. A LICENSED FIRE ALARM PLANNING SUPERINTENDENT CERTIFIED TO A MINIMUM LEVEL 3, IN THE SUBFIELD OF FIRE ALARM SYSTEMS THROUGH THE NATIONAL INSTITUTE FOR CERTIFICATION IN ENGINEERING TECHNOLOGIES (NICET), SHALL PROVIDE PLANS AND CALCULATIONS FOR A MANUAL AND AUTOMATIC FIRE DETECTION AND ALARM SYSTEM TO COMPLY WITH THE BUILDING SPACE LAYOUT, BUILDING OCCUPANCY, CURRENT NFPA 72, LOCAL AND STATE CODE REQUIREMENTS, AND THE FIRE ALARM AND DETECTION SYSTEM SPECIFICATIONS.

C. CONTRACTOR TO ADD ADDITIONAL STROBE DEVICE TO ALL CLASSROOMS.

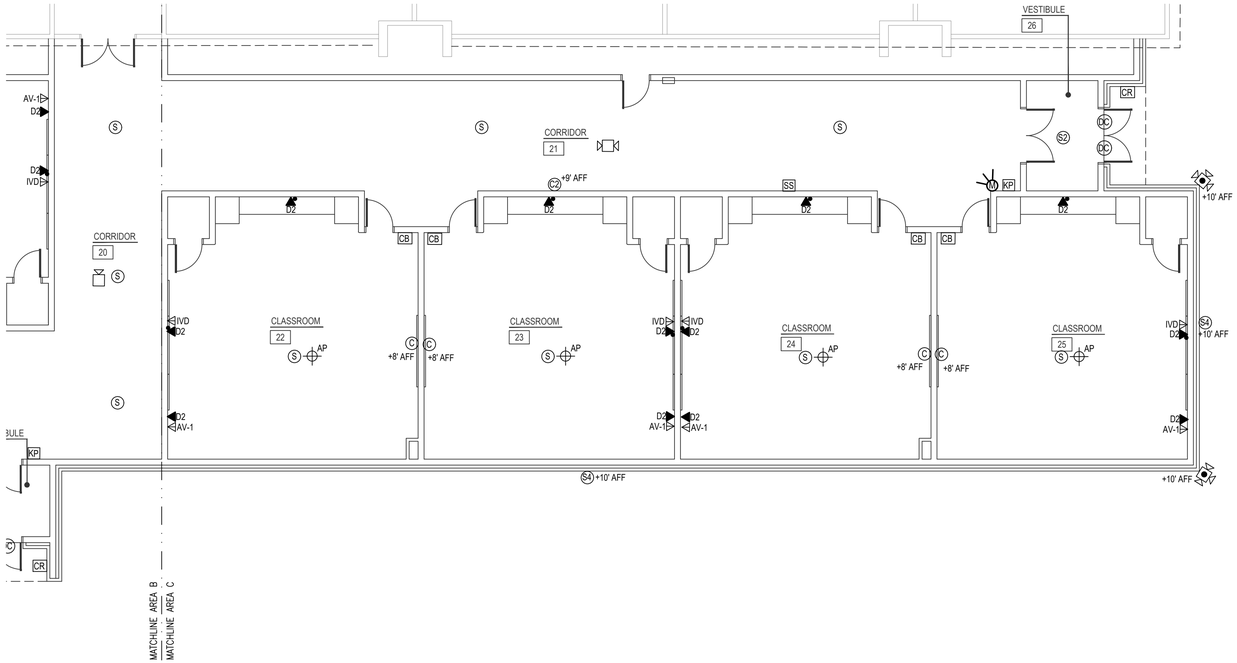

1 CLASSROOMS - AREA C

SCALE: 1/8" = 1'-0"

NORTH

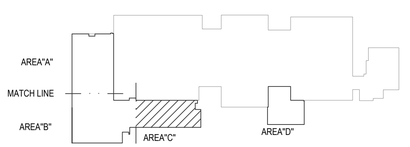

KEY PLAN

NORTH

AGP
the Abla Griffin Partnership L.L.C.
201 N. BROADWAY
SUITE 210
MOORE, OK. 73160
405.735.3477
AGP@theAGP.net
www.theAGP.net

CEDAR CREEK
CIVIL

KFC ENGINEERING
STRUCTURAL

SALAS O'BRIEN
MECHANICAL / ELECTRICAL

NY
drawn by

NY
checked by

JULY 2023
date

revisions

MOORE PUBLIC SCHOOLS
BOARD OF EDUCATION
MOORE, OKLAHOMA

MOORE Public Schools
LEARNING FOR LIFE

CLASSROOM ADDITION
HIGHLAND WEST
JUNIOR HIGH SCHOOL

sheet no:

T203

Salas O'Brien
2600 Van Buren St., Suite 2635
Norman, OK 73072
Salas O'Brien Registration: CA# 7058
Expiration Date : 6/30/2025
Salas O'Brien Project Number: 2023-02792-00

OWNERSHIP USE OF DOCUMENTS:

AGP EXPRESSLY RESERVES ITS COPYRIGHT AND OTHER PROPERTY RIGHTS OF ALL PLANS AND DRAWINGS DESIGNED AND/OR PRODUCED. PLANS AND DRAWINGS ARE NOT TO BE REPRODUCED IN ANY FORM OR MANNER WITHOUT THE EXPRESSED WRITTEN CONSENT OF AGP.

GENERAL NOTES

A. COORDINATE ALL FINAL MOUNTING HEIGHTS, FOR WALL MOUNTED DEVICES, PRIOR TO ROUGH-IN. COORDINATE WITH ARCHITECT, OWNER AND ENGINEER.

B. COORDINATE ALL CEILING DEVICE LOCATIONS WITH ARCHITECTURAL DRAWINGS AND INTERIOR DESIGN CONSULTANT(IF APPLICABLE) PRIOR TO ROUGH-IN.

C. REFERENCE TECHNOLOGY PLANS, OVERALL PLANS, NOTES & LEGENDS, ELECTRICAL PLAN AND THEATRICAL PLANS FOR ADDITIONAL INFORMATION AND DEVICE/OUTLET LOCATIONS.

D. CONTRACTOR TO COORDINATE ALL DROP LOCATIONS WITH FURNITURE. COORDINATE WITH ARCHITECT AND OWNER FOR MORE INFORMATION.

KEYED NOTES

(1) DOOR HARDWARE SHOULD HAVE THE FOLLOWING:
1. DOOR HANDLE SHOULD HAVE A KEY ON THE OFFICE SIDE AND BE LOCKABLE SO YOU CANNOT ACCESS THE MAIN BUILDING DURING SCHOOL HOURS. IT SHOULD HAVE FREE EGRESS FROM THE MAIN BUILDING SIDE TO THE OFFICE.
2. DEADBOLT SHOULD HAVE A KEY ON THE MAIN BUILDING SIDE AND A THUMB KNOB ON THE OFFICE SIDE. THIS WILL ALLOW THEM TO LOCK THE OFFICE AFTER HOURS.

FIRE ALARM

A. FIRE ALARM SYSTEM IS A PERFORMANCE BASED PER SHEET SPECIFICATIONS. CONTRACTOR TO REFERENCE SHEET T603 FOR ADDITIONAL INFORMATION.

B. A LICENSED FIRE ALARM PLANNING SUPERINTENDENT CERTIFIED TO A MINIMUM LEVEL 3, IN THE SUBFIELD OF FIRE ALARM SYSTEMS THROUGH THE NATIONAL INSTITUTE FOR CERTIFICATION IN ENGINEERING TECHNOLOGIES (NICET), SHALL PROVIDE PLANS AND CALCULATIONS FOR A MANUAL AND AUTOMATIC FIRE DETECTION AND ALARM SYSTEM TO COMPLY WITH THE BUILDING SPACE LAYOUT, BUILDING OCCUPANCY, CURRENT NFPA 72, LOCAL AND STATE CODE REQUIREMENTS, AND THE FIRE ALARM AND DETECTION SYSTEM SPECIFICATIONS.

C. CONTRACTOR TO ADD ADDITIONAL STROBE DEVICE TO ALL CLASSROOMS.

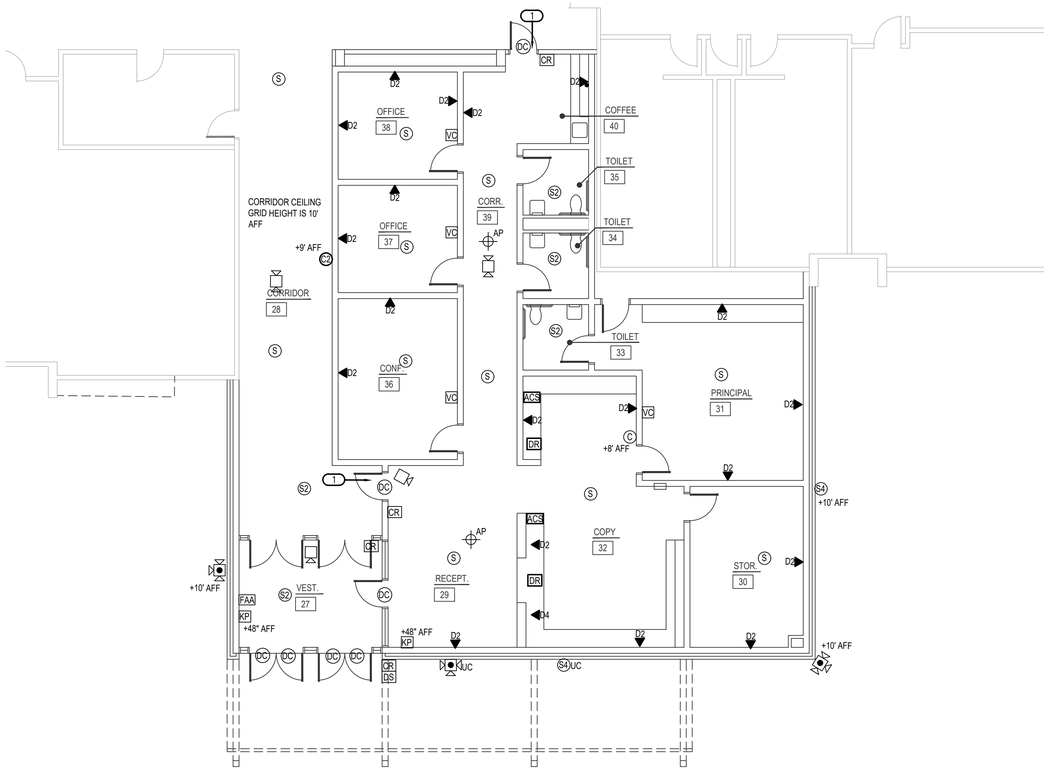

1 CLASSROOMS - AREA D
SCALE: 1/8" = 1'-0"

NORTH

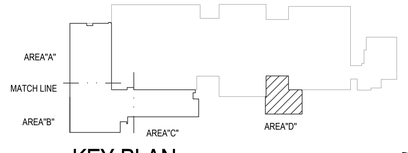

KEY PLAN

NORTH

AGP
the Abla Griffin Partnership L.L.C.
201 N. BROADWAY
SUITE 210
MOORE, OK. 73160
405.735.3477
AGP@theAGP.net
www.theAGP.net

CEDAR CREEK
CIVIL

KFC ENGINEERING
STRUCTURAL

SALAS O'BRIEN
MECHANICAL / ELECTRICAL

NY
drawn by

NY
checked by

JULY 2023
date

revisions

MOORE PUBLIC SCHOOLS
BOARD OF EDUCATION
MOORE, OKLAHOMA

MOORE Public Schools
LEARNING FOR LIFE

CLASSROOM ADDITION
HIGHLAND WEST
JUNIOR HIGH SCHOOL

sheet no:

T204

Salas O'Brien
2600 Van Buren St., Suite 2635
Norman, OK 73072
Salas O'Brien Registration: CA# 7058
Expiration Date : 6/30/2025
Salas O'Brien Project Number: 2023-02792-00

OWNERSHIP USE OF DOCUMENTS:

AGP EXPRESSLY RESERVES ITS COPYRIGHT AND OTHER PROPERTY RIGHTS OF ALL PLANS AND DRAWINGS DESIGNED AND/OR PRODUCED. PLANS AND DRAWINGS ARE NOT TO BE REPRODUCED IN ANY FORM OR MANNER WITHOUT THE EXPRESSED WRITTEN CONSENT OF AGP.

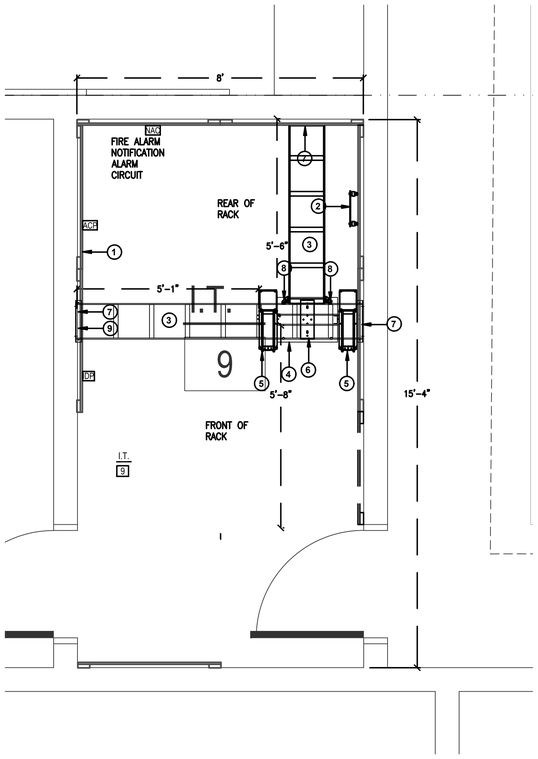

1 IDF ROOM - I.T. 9
SCALE: 1/2" = 1'-0"

NORTH

TECH ENLARGED PLAN GEN NOTES

A. ALL RACK LOCATIONS SHALL BE COORDINATED WITH THE PROJECT'S TECHNOLOGY CONSULTANT AND OWNER PRIOR TO INSTALLATION. NO RACKS AND/OR ASSOCIATED CABLE TRAY SYSTEM SHALL BE PERMANENTLY INSTALLED PRIOR TO DOCUMENTED ACCEPTANCE.

B. PATCH PANEL QUANTITY SHALL BE DETERMINED BY STATION CABLE DROP COUNTS SHOWN ON TECHNOLOGY PLANS AND THE ASSOCIATED PROJECT MATRIX. ENSURE PATCH PANEL QUANTITY IS SUFFICIENT TO SUPPORT THE NUMBER OF PORTS REQUIRED BY TECHNOLOGY PLANS PLUS AN ADDITIONAL 25% FOR FUTURE GROWTH.

C. CONTRACTOR SHALL NOT MOUNT EXCEED MORE THAN A 50% RACK FILL RATIO ON ANY RACK.

D. REFERENCE SPECIFICATIONS FOR MATERIALS AND METHODS

E. ALL RACKS, LADDER TRAYS, LIGHTNING PROTECTION ENCLOSURES AND ANY OTHER DEVICES, PART OF THE STRUCTURED CABLING SYSTEM, SHALL BE GROUNDED TO A GROUND BUS BAR LOCATED IN THE TELECOMMUNICATIONS ROOM WITH A #6AWG GROUND CABLE. DAISY CHAINING WILL NOT BE ACCEPTED. ALL ITEMS SHALL HAVE A DEDICATED GROUND CABLE TO BUS BAR.GROUND CABLE SHALL BE GREEN IN COLOR.

TECHNOLOGY ENLARGED PLAN KEYED NOTES

1. INDICATES THE LOCATION OF A 8" TALL, 3/4" FIRE RATED PLYWOOD CONTRACTOR TO PROVIDE AND INSTALL PLYWOOD AND ALL REQUIRED MOUNTING HARDWARE. PLYWOOD SHALL BE PAINTED WHITE WITH FIRE RATED PAINT. TYPICAL FOR ALL SHOWN ON DRAWING.
2. INDICATES THE LOCATION OF A NEW WALL MOUNTED TELECOMMUNICATION GROUND BUS BAR (TGBB). CABLING CONTRACTOR TO PROVIDE BUS BAR AND ALL REQUIRED MATERIAL TO MOUNT AT THE LOCATION SHOWN. TGBB TO BE MOUNTED AT +93" A.F.F.
3. PROVIDE AND INSTALL A 12" WIDE, UNIVERSAL LADDER TRAY AND ALL REQUIRED MOUNTING HARDWARE. LADDER TRAY SHALL BE BLACK IN COLOR. TYPICAL FOR ALL SHOWN ON ENTIRE PROJECT.
4. PROVIDE AND INSTALL ONE (1) 2-POST, FLOOR MOUNTED, 7' RELAY RACK (BLACK IN COLOR). PROVIDE BONDING WASHERS, BOLTS, AND NUTS AT ALL MECHANICALLY CONNECTED LOCATIONS OF THE RACK TO ENSURE THAT ALL PIECES OF THE RACK ARE COMPLETELY BONDED. SCRAPING PAINT FROM RACKS TO MAKE A BOND WILL NOT BE ACCEPTED. ALL RACK MOUNTED COMPONENTS SHALL BE MOUNTED WITH BONDING SCREWS AND THE CONTRACTOR SHALL PROVIDE THE OWNER WITH (50) ADDITIONAL BONDING SCREWS FOR THE INSTALLATION OF OWNER EQUIPMENT. NO DAISY CHAINING GROUNDS FROM RACK TO CABLE TRAY OR TO OTHER RACKS WILL BE ACCEPTED. ALL GROUNDS SHALL BE HOME RUN TO THE TELECOMMUNICATIONS GROUND BUS BAR (TGBB). TYPICAL FOR ALL SHOWN ON THE ENTIRE PROJECT.
5. PROVIDE AND INSTALL ONE (1) 7"X6", FRONT AND REAR MANAGED, VERTICAL CABLE MANAGER (BLACK IN COLOR). CABLE MANAGERS SHALL BE INSTALLED ON EACH END OF THE RACK SYSTEMS AND BETWEEN EACH RACK. CABLE MANAGERS SHALL HAVE A SINGLE, SOLID, FULL HEIGHT HINGED DOOR IN THE FRONT AND WIDE SPACED CABLE RINGS WITH SPIN-OPEN LATCHES IN THE REAR. TYPICAL FOR ALL SHOWN IN THE ENTIRE PROJECT.
6. PROVIDE AND INSTALL RACK-TO-RUNWAY MOUNTING PLATE FOR ALL LOCATIONS WHEN ASSOCIATED WITH A 2-POST OR4-POST BACK RACK. MOUNTING PLATE SHALL BE BLACK IN COLOR. PROVIDE (1) 6" LADDER TRAY ELEVATION KIT (BLACK IN COLOR) AT EACH RACK-TO-RUNWAY MOUNTING PLATE LOCATION. TYPICAL FOR ALL SHOWN ON THE ENTIRE PROJECT.
7. INDICATES THE LOCATION OF A 12" LADDER TRAY WALL ANGLE SUPPORT BRACKET, BLACK IN COLOR. CONTRACTOR TO PROVIDE AND INSTALL WALL ANGLE SUPPORT BRACKET AND ALL REQUIRED MOUNTING HARDWARE AT EACH LOCATION WHERE LADDER TRAY TERMINATES INTO A VERTICAL WALL SECTION. TYPICAL FOR ALL SHOWN.
8. PROVIDE AND INSTALL A LADDER JUNCTION SPLICE KIT, BLACK IN COLOR. PROVIDE ONE (1) KIT AT EACH LADDER TRAY JUNCTION SPLICE LOCATION ON THE ENTIRE PROJECT.
9. PROVIDE AND INSTALL A MINIMUM OF THREE (3) STI EZPATH SERIES 44+ THRU-WALL PENETRATION SLEEVES WITH MULTI-GANG WALLPLATE BRACKET SYSTEM AT INDICATED LOCATION. PROVIDE ADDITIONAL AS REQUIRED TO MAINTAIN A MAXIMUM OF 40% FILL RATIO, PLUS ONE (1) ADDITIONAL FOR SPARE.

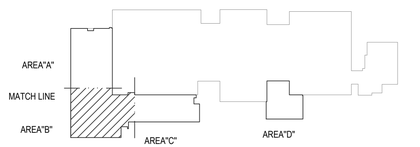

KEY PLAN

NORTH

Salas O'Brien
2600 Van Buren St., Suite 2635
Norman, OK 73072
Salas O'Brien Registration: CA# 7058
Expiration Date : 6/30/2025
Salas O'Brien Project Number: 2023-02792-00

AGP
the Abla Griffin Partnership L.L.C.
201 N. BROADWAY
SUITE 210
MOORE, OK. 73160
405.735.3477
AGP@theAGP.net
www.theAGP.net

CEDAR CREEK
CIVIL

KFC ENGINEERING
STRUCTURAL

SALAS O'BRIEN
MECHANICAL / ELECTRICAL

NY
drawn by

NY
checked by

JULY 2023
date

revisions

MOORE PUBLIC SCHOOLS
BOARD OF EDUCATION
MOORE, OKLAHOMA

MOORE Public Schools
LEARNING FOR LIFE

CLASSROOM ADDITION
HIGHLAND WEST
JUNIOR HIGH SCHOOL

sheet no:

T301

OWNERSHIP USE OF DOCUMENTS:

AGP EXPRESSLY RESERVES ITS COPYRIGHT AND OTHER PROPERTY RIGHTS OF ALL PLANS AND DRAWINGS DESIGNED AND/OR PRODUCED. PLANS AND DRAWINGS ARE NOT TO BE REPRODUCED IN ANY FORM OR MANNER WITHOUT THE EXPRESSED WRITTEN CONSENT OF AGP.

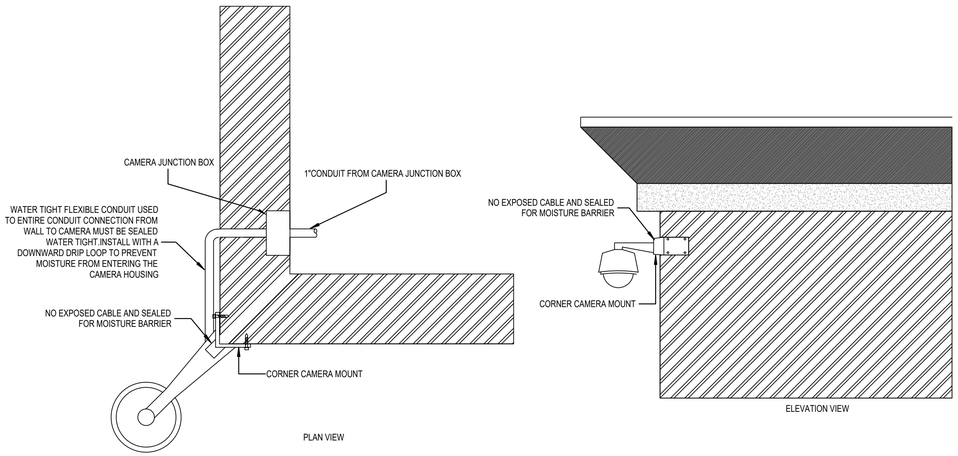

NOTE:

ELECTRICAL CONTRACTOR SHALL PROVIDE 1" CONDUIT WITH PULL STRING TO NEAREST AVAILABLE PLENUM SPACE. SECURITY CONTRACTORS SHALL PROVIDE CABLE FEED-THROUGH MOUNT FOR CAMERA. NO EXPOSED CABLE WILL BE ALLOWED. SECURITY CONTRACTOR TO COORDINATE MOUNTING HEIGHT WITH ELECTRICAL CONTRACTOR PRIOR TO ROUGH-IN.

01 CORNER MOUNTING DETAIL

NOT TO SCALE

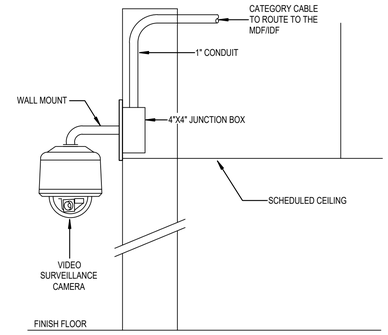

03 INTERIOR WALL MOUNTED DOME CAMERA

NOT TO SCALE

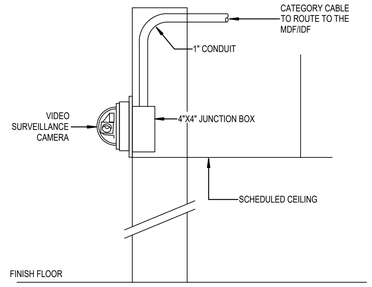

02 INTERIOR WALL MOUNT CAMERA-VERTICAL

NOT TO SCALE

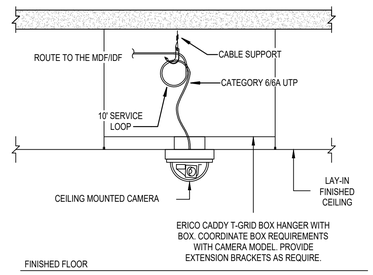

04 INTERIOR LAY-IN CEILING MOUNTED CAMERA

NOT TO SCALE

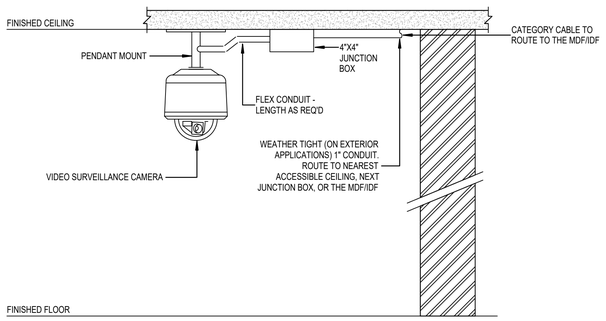

05 EXT./INT. PENDANT MOUNTED DOME CAMERA

NOT TO SCALE

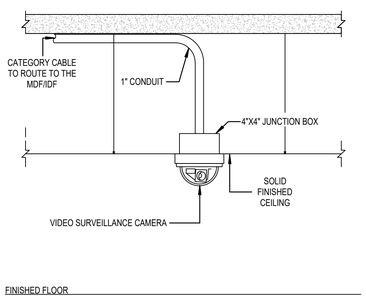

06 EXTERIOR/INTERIOR SOLID CEILING MOUNT CAMERA

NOT TO SCALE

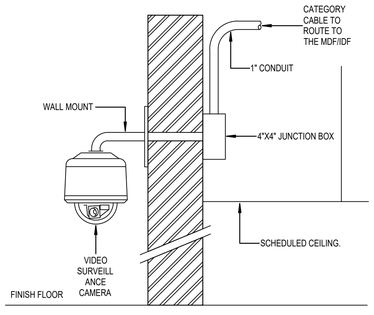

07 EXTERIOR WALL MOUNTED DOME CAMERA

NOT TO SCALE

GENERAL NOTES:

A. ELECTRICAL CONTRACTOR SHALL PROVIDE CONDUITS AND BACK BOXES. CONDUITS SHALL ROUTE TO THE NEAREST, ACCESSIBLE PLENUM SPACE.

B. ALL WALL, CORNER, PENDANT, AND UNDER CANOPY MOUNTING HEIGHTS SHALL BE COORDINATED WITH THE OWNER AND SECURITY CONSULTANT PRIOR TO ROUGH-IN.

C. SECURITY CONTRACTOR SHALL PROVIDE CAMERAS, MOUNTING HARDWARE, AND ANY OTHER COMPONENTS AND/OR HARDWARE REQUIRED FOR A COMPLETE INSTALLATION.

D. REFERENCE VIDEO SURVEILLANCE CAMERA SCHEDULES, FLOOR PLANS, AND SPECIFICATIONS FOR ADDITIONAL INSTRUCTIONS.

E. CABLE FEED-THROUGH MOUNT FOR CAMERA. NO EXPOSED CABLE WILL BE ALLOWED. SECURITY CONTRACTOR TO COORDINATE MOUNTING HEIGHT WITH ELECTRICAL CONTRACTOR PRIOR TO ROUGH-IN.

08 NOTES

NOT TO SCALE

AGP
the Abla Griffin Partnership L.L.C.
201 N. BROADWAY
SUITE 210
MOORE, OK. 73160
405.735.3477
AGP@theAGP.net
www.theAGP.net

CEDAR CREEK
CIVIL

KFC ENGINEERING
STRUCTURAL

SALAS O'BRIEN
MECHANICAL / ELECTRICAL

NY
drawn by

NY
checked by

JULY 2023
date

revisions

MOORE PUBLIC SCHOOLS
BOARD OF EDUCATION
MOORE, OKLAHOMA

MOORE Public Schools
LEARNING FOR LIFE

CLASSROOM ADDITION
HIGHLAND WEST
JUNIOR HIGH SCHOOL

sheet no:

T401

Salas O'Brien
2600 Van Buren St., Suite 2635
Norman, OK 73072
Salas O'Brien Registration: CA# 7058
Expiration Date : 6/30/2025
Salas O'Brien Project Number: 2023-02792-00

OWNERSHIP USE OF DOCUMENTS:

AGP EXPRESSLY RESERVES ITS COPYRIGHT AND OTHER PROPERTY RIGHTS OF ALL PLANS AND DRAWINGS DESIGNED AND/OR PRODUCED. PLANS AND DRAWINGS ARE NOT TO BE REPRODUCED IN ANY FORM OR MANNER WITHOUT THE EXPRESSED WRITTEN CONSENT OF AGP.

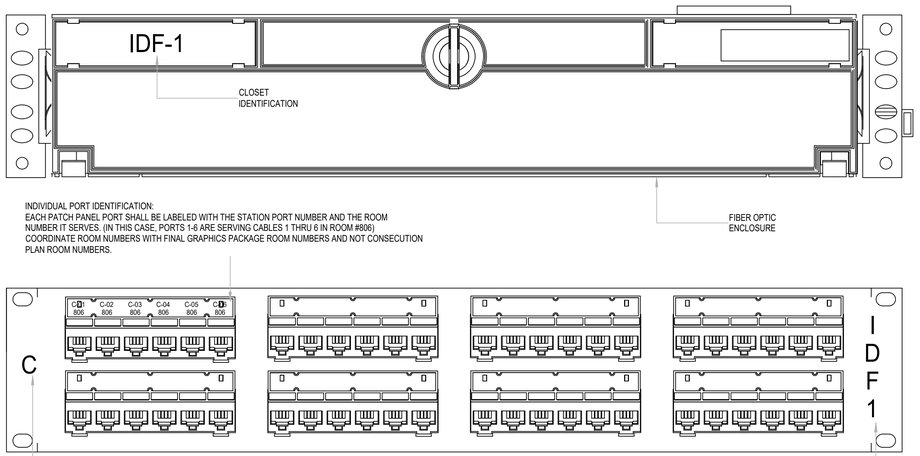

01 FIBER ENCLOSURE/ COPPER PATCH PANEL LABELING DETAIL — NOT TO SCALE

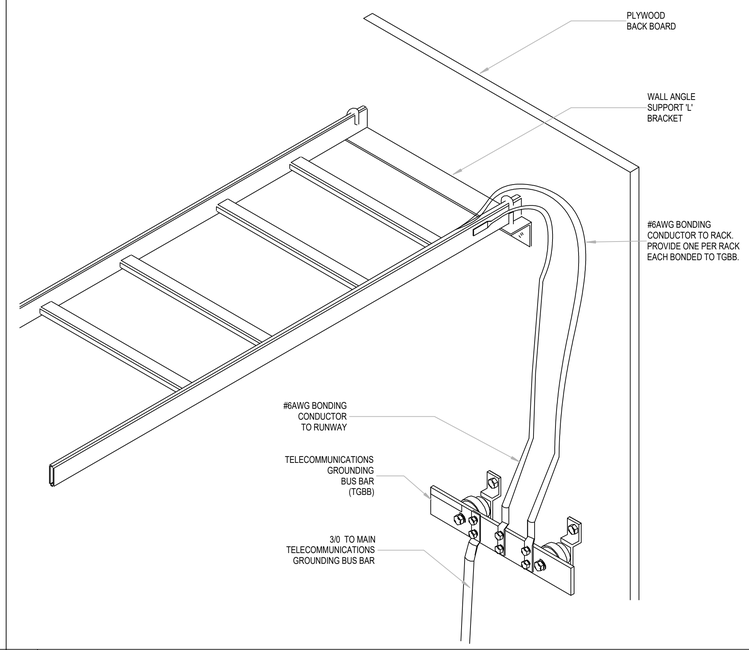

02 CABLE RUNWAY - GROUNDING AND BONDING — NOT TO SCALE

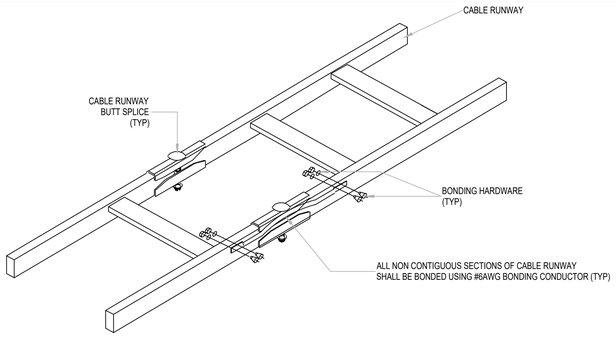

03 CABLE RUNWAY - BONDING AND BUTT SPLICE — NOT TO SCALE

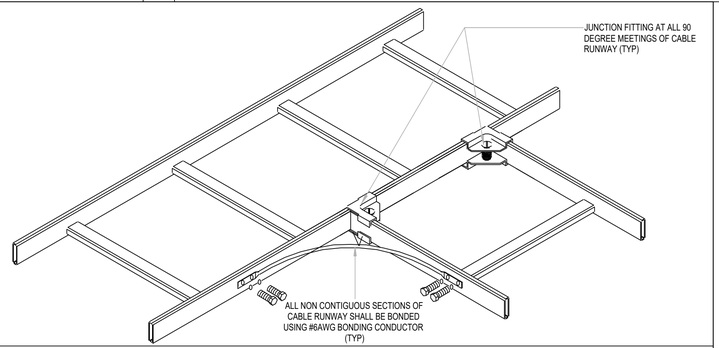

04 CABLE RUNWAY - JUNCTION AND BONDING — NOT TO SCALE

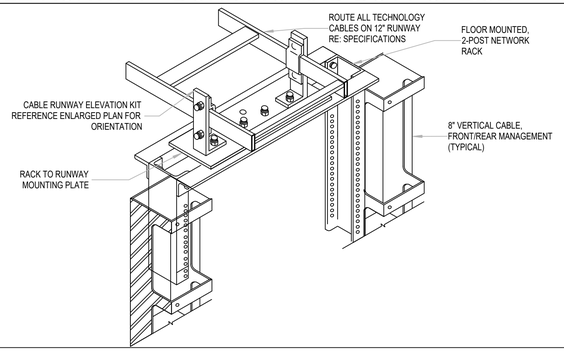

05 RACK TO RUNWAY DETAIL — NOT TO SCALE

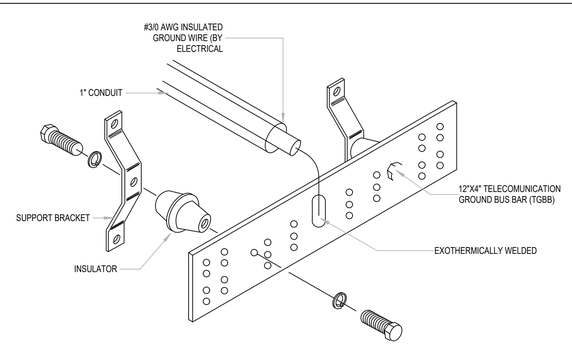

06 TELECOMMUNICATION GROUNDING BUS DETAIL — NOT TO SCALE

AGP
the Abla Griffin Partnership L.L.C.
201 N. BROADWAY
SUITE 210
MOORE, OK. 73160
405.735.3477
AGP@theAGP.net
www.theAGP.net

CEDAR CREEK
CIVIL

KFC ENGINEERING
STRUCTURAL

SALAS O'BRIEN
MECHANICAL / ELECTRICAL

NY
drawn by

NY
checked by

JULY 2023
date

revisions

MOORE PUBLIC SCHOOLS
BOARD OF EDUCATION
MOORE, OKLAHOMA

MOORE Public Schools
LEARNING FOR LIFE

CLASSROOM ADDITION
HIGHLAND WEST
JUNIOR HIGH SCHOOL

sheet no:

T402

Salas O'Brien
2600 Van Buren St., Suite 2635
Norman, OK 73072
Salas O'Brien Registration: CA# 7058
Expiration Date : 6/30/2025
Salas O'Brien Project Number: 2023-02792-00

OWNERSHIP USE OF DOCUMENTS:

AGP EXPRESSLY RESERVES ITS COPYRIGHT AND OTHER PROPERTY RIGHTS OF ALL PLANS AND DRAWINGS DESIGNED AND/OR PRODUCED. PLANS AND DRAWINGS ARE NOT TO BE REPRODUCED IN ANY FORM OR MANNER WITHOUT THE EXPRESSED WRITTEN CONSENT OF AGP.

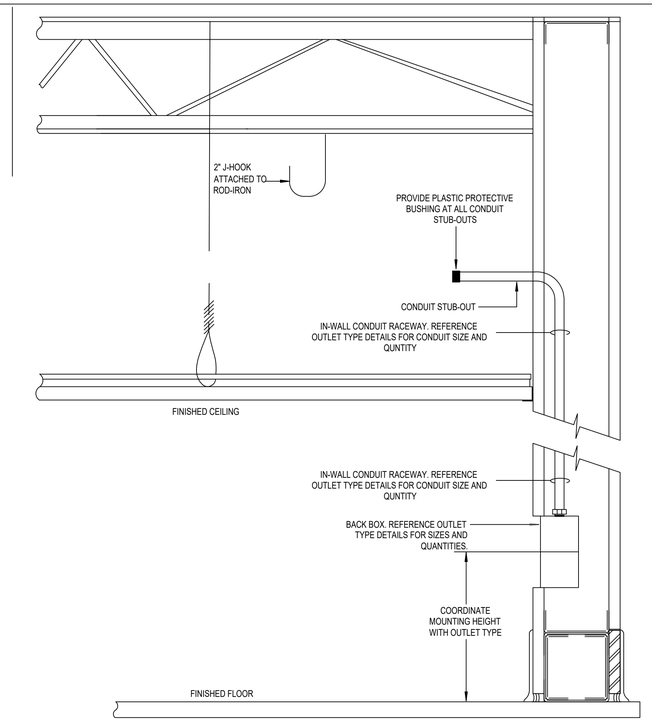

01 LOW VOLTAGE ELEVATION - IN-WALL RACEWAY NOT TO SCALE

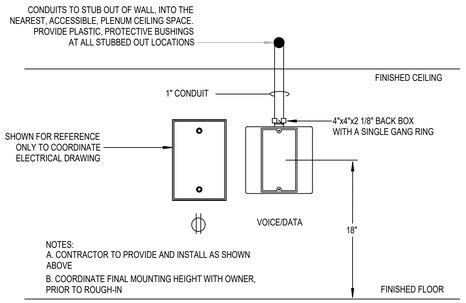

02 RACEWAY DETAIL - TYPICAL VOICE/DATA OUTLET NOT TO SCALE

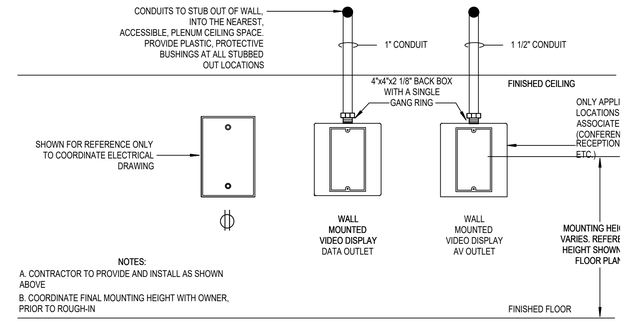

03 RACEWAY DETAIL - WALL MOUNTED DISPLAY N

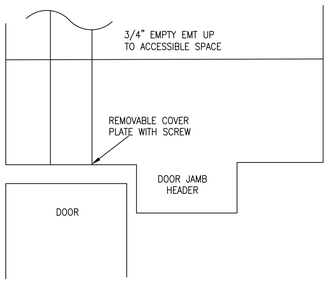

04 SECURITY CONDUIT DOOR JAMB HEADER NOT TO SCALE

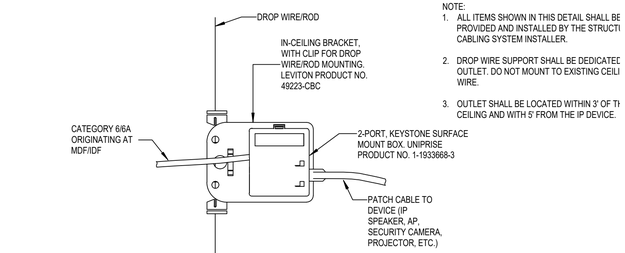

NOTE:
1. ALL ITEMS SHOWN IN THIS DETAIL SHALL BE PROVIDED AND INSTALLED BY THE STRUCTI CABLING SYSTEM INSTALLER.
2. DROP WIRE SUPPORT SHALL BE DEDICATED OUTLET. DO NOT MOUNT TO EXISTING CEILI WIRE.
3. OUTLET SHALL BE LOCATED WITHIN 3' OF TH CEILING AND WITH 5' FROM THE IP DEVICE.

05 ABOVE CEILING STAND ALONE OUTLET N

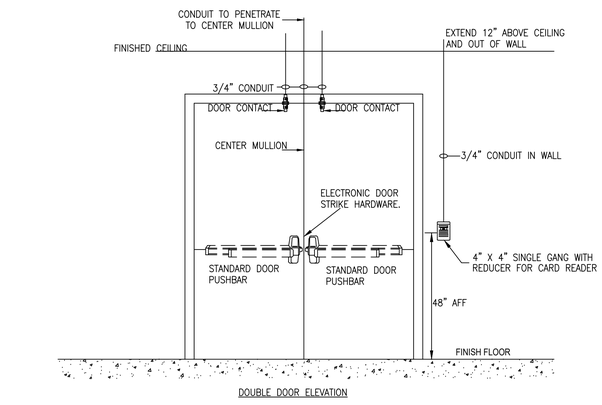

06 DOUBLE DOOR SECURITY & ACCESS CONTROL

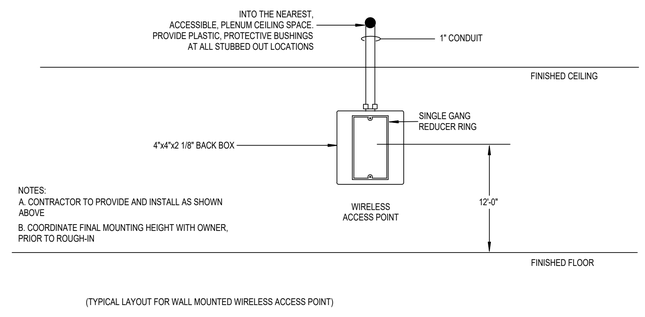

(TYPICAL LAYOUT FOR WALL MOUNTED WIRELESS ACCESS POINT)

07 RACEWAY DETAIL - WALL MOUNTED WIRELESS AP NOT TO SCALE

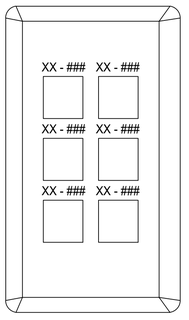

1. FACEPLATE LABELING SHALL BE MACHINE GENERATED AND SHALL NOT BE LESS THEN 1/4" IN HEIGHT
2. PROVIDE BLANK INSERTS FOR ANY UNUSED PORTS
3. COORDINATE EXACT LABELING SCHEME WITH OWNER AND ENGINEER.
4. XX = CABINET ID, ### = DROP NUMBER.

08 FACEPLATE LABEL DETAIL N

09 RACEWAY DETAIL - WALL MOUNTED TELEPHONE NOT TO SCALE

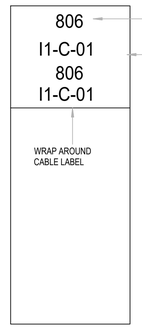

ROOM NUMBER. (COORDINATE WITH FINAL GRAPHICS PACKAGE, NOT CONSTRUCTION NUMBERS)
T.R. IDENTIFICATION-PANEL IDENTIFICATION-PORT IDENTIFICATION
IF CABLE SERVERS BUILDING INTERCOM SYSTEM PROVIDE AN "I" BETWEEN THE TR IDENTIFIER AND THE PANEL: EXAMPLE I1-I-C-01

1. WRAP AROUND CABLE LABEL TO BE INSTALLED AT BOTH THE WORK AREA OUTLET AND CLOSET ENDS OF ALL CABLES. INSTALL LABEL 1" FROM THE END OF THE CABLE JACKET AT BOTH ENDS.
2. CABLE LABELING SHALL BE MACHINE GENERATED AND SHALL NOT BE LESS THEN 1/8" IN HEIGHT.
3. COORDINAE EXACT LABELING SCHEME WITH OWNER AND ENGINEER.

10 CABLE LABEL DETAIL N

AGP
the Abla Griffin Partnership L.L.C.
201 N. BROADWAY
SUITE 210
MOORE, OK. 73160
405.735.3477
AGP@theAGP.net
www.theAGP.net

CEDAR CREEK
CIVIL

KFC ENGINEERING
STRUCTURAL

SALAS O'BRIEN
MECHANICAL / ELECTRICAL

NY
drawn by

NY
checked by

JULY 2023
date

revisions

MOORE PUBLIC SCHOOLS
BOARD OF EDUCATION
MOORE, OKLAHOMA

MOORE Public Schools
LEARNING FOR LIFE

CLASSROOM ADDITION
HIGHLAND WEST
JUNIOR HIGH SCHOOL

sheet no:

T403

Salas O'Brien
2600 Van Buren St., Suite 2635
Norman, OK 73072
Salas O'Brien Registration: CA# 7058
Expiration Date : 6/30/2025
Salas O'Brien Project Number: 2023-02792-00

OWNERSHIP USE OF DOCUMENTS:

AGP EXPRESSLY RESERVES ITS COPYRIGHT AND OTHER PROPERTY RIGHTS OF ALL PLANS AND DRAWINGS DESIGNED AND/OR PRODUCED. PLANS AND DRAWINGS ARE NOT TO BE REPRODUCED IN ANY FORM OR MANNER WITHOUT THE EXPRESSED WRITTEN CONSENT OF AGP.

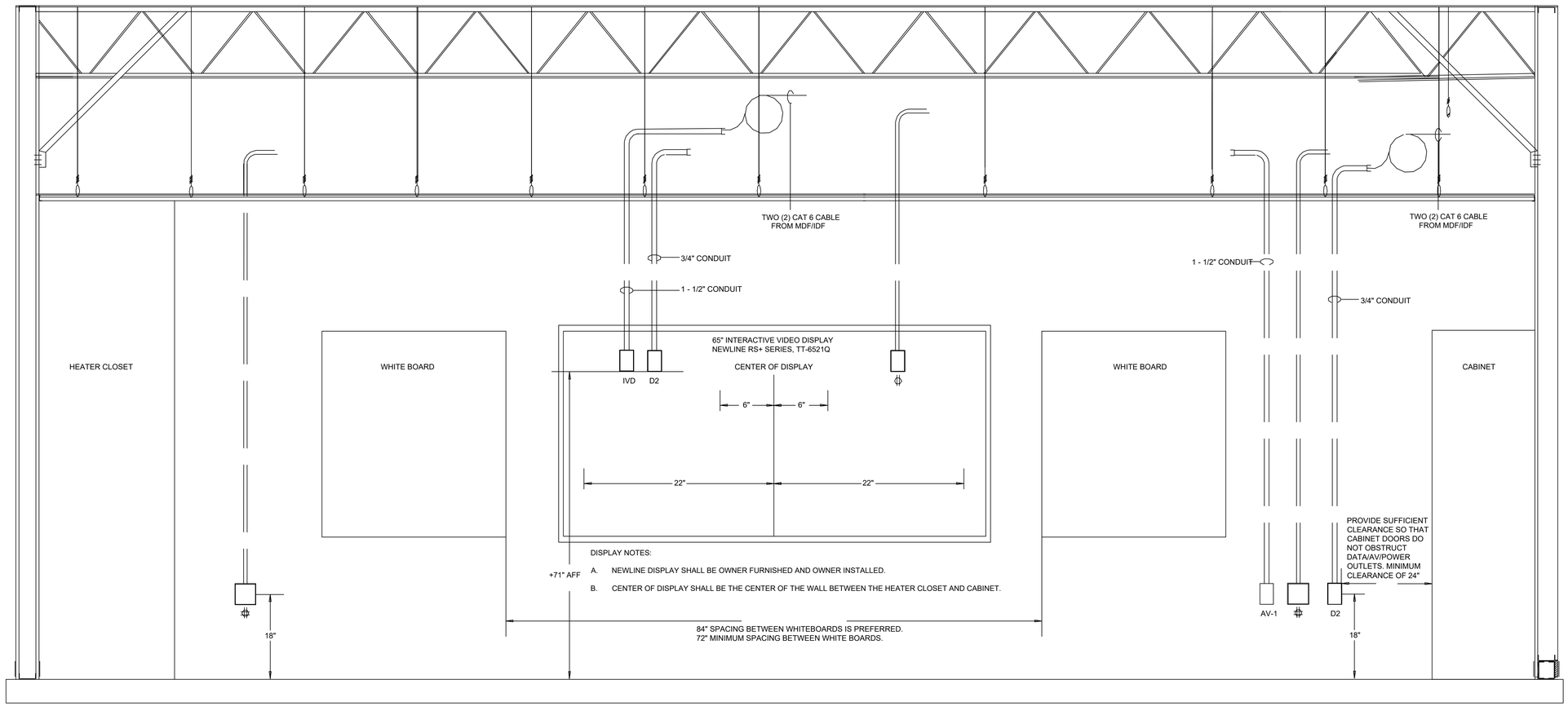

01 TYPICAL TECHNOLOGY WALL PRESENTATION - JUNIOR HIGH AND HIGH SCHOOL

NOT TO SCALE

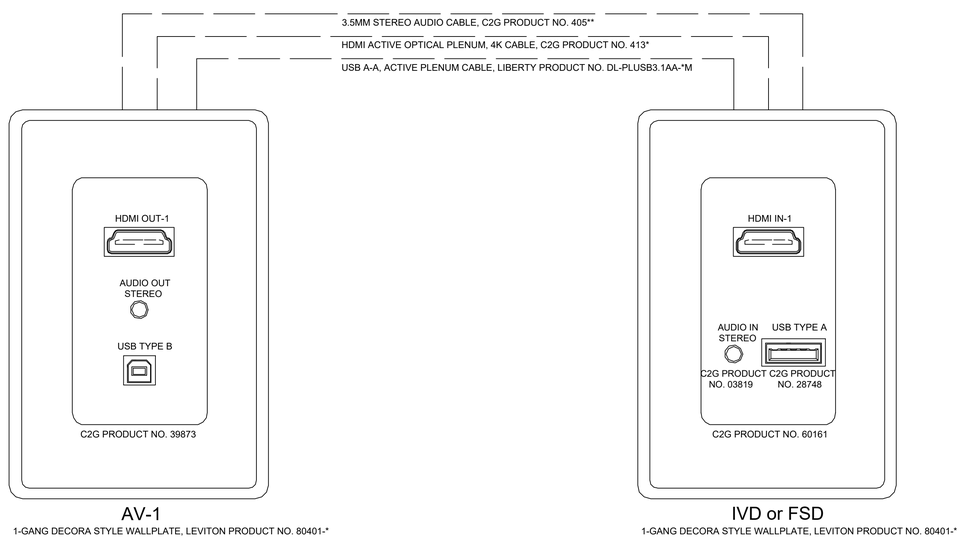

02 TYPICAL 'IVD' 'AV-1' OUTLET DETAIL

NOT TO SCALE

AGP
the Abla Griffin Partnership L.L.C.

201 N. BROADWAY
SUITE 210
MOORE, OK. 73160
405.735.3477
AGP@theAGP.net
www.theAGP.net

CEDAR CREEK
CIVIL

KFC ENGINEERING
STRUCTURAL

SALAS O'BRIEN
MECHANICAL / ELECTRICAL

NY
drawn by

NY
checked by

JULY 2023
date

revisions

MOORE PUBLIC SCHOOLS
BOARD OF EDUCATION
MOORE, OKLAHOMA

MOORE Public Schools
LEARNING FOR LIFE

CLASSROOM ADDITION
HIGHLAND WEST
JUNIOR HIGH SCHOOL

sheet no:

T404

Salas O'Brien
2600 Van Buren St., Suite 2635
Norman, OK 73072
Salas O'Brien Registration: CA# 7058
Expiration Date : 6/30/2025
Salas O'Brien Project Number: 2023-02792-00

OWNERSHIP USE OF DOCUMENTS:

AGP EXPRESSLY RESERVES ITS COPYRIGHT AND OTHER PROPERTY RIGHTS OF ALL PLANS AND DRAWINGS DESIGNED AND/OR PRODUCED. PLANS AND DRAWINGS ARE NOT TO BE REPRODUCED IN ANY FORM OR MANNER WITHOUT THE EXPRESSED WRITTEN CONSENT OF AGP.

SYSTEMS SPECIFICATIONS

STRUCTURED CABLING

Horizontal Cabling

Requirements

- Copper cable shall be Category 6 plenum rated cable (blue in Color) for all work station drops.
- Copper cable shall be Category 6 plenum rated cable (White in Color) for all Security camera drops.
- Copper cable shall be Category 6 plenum rated cable (Yellow in Color) for all Wifi drops.
- Approved Category 6 cables are as follows.

Superior Essex Cat6 Plenum Part #'s	77-240-2B blue 77-240-4B white 77-240-6B yellow 77-240-5B green
Mohawk Cat6 Plenum Part #'s	M58281B Blue M58280B white M58283B yellow M58286B green
Berk-Tech Cat6 Plenum Part #'s	10136226 blue 10136230 white 10136749 yellow 10136748 green
General Cat6 Plenum Part #'s	7131800 blue 7131841 white 7131802 yellow 7131806 green

- Connector shall be Leviton part # 61110-RO6 eXtreme 6 connector for all workstation drops.
- Connector shall be Leviton part # 61110-RW6 eXtreme 6 connector for all Security camera drops.
- Connector shall be Leviton part # 61110-RY6 eXtreme 6 connector for all Wifi drops.
- Contractor shall provide Moore Public Schools, Technology Department, one 5' category 6 patch cord, (blue in color) for each category 6 work station cable installed. To be installed by contractor at the network cabinet.
- Contractor shall provide Moore Public Schools, Technology Department, one 10' category 6 patch cord, (blue in color) for each category 6 work station cable installed. Leave in box at network cabinet. To be installed by MPS Technology Dept.
- Contractor shall provide Moore Public Schools, Technology Department, one 5' category 6 patch cord, (White in color) for each category 6 Security Camera cable installed. To be installed by contractor at the network cabinet.
- Contractor shall provide Moore Public Schools, Technology Department, one 10' category 6 patch cord, (White in color) for each category 6 Security Camera cable installed. Leave in box at network cabinet. To be installed by MPS Technology Dept.
- Contractor shall provide Moore Public Schools, Technology Department, one 5' category 6 patch cord, (Yellow in color) for each category 6 Wifi cable installed. To be installed by contractor at the network cabinet.
- Contractor shall provide Moore Public Schools, Technology Department, one 10' category 6 patch cord, (Yellow in color) for each category 6 Wifi cable installed. Leave in box at network cabinet. To be installed by MPS Technology Dept.
- Each cable shall be terminated on the patch panel in data closets.
- All Category 6 connectors shall be placed into QuickPort faceplates at the workstation end.
- Faceplate shall be Leviton part # 41080-6wp
- No substitutions.

Communications Backbone Cabling

Requirements - Optical fiber

- 1 Optical fiber cable shall be run from the MDF to each IDF.
- Fiber shall be terminated with LC connectors.
- Optical fiber cable shall be plenum rated Laser Optimized 50 micron Multi Mode distribution fiber.
- Optical fiber cable shall be an OM3 rated cable guaranteed to support 10 Gigabit Ethernet for 300 meters using 850 nm wavelength.
- Optical fiber cable shall have 24 strands using industry standard color coding.
- Optical fiber cable shall have a flame retardant and low smoke FEP jacket.
- Optical fiber cable shall support 10GBase-SX applications for the life of the system.
- Optical fiber cable shall be armor jacketed or protected inside plenum rated plastic inner duct orange or aqua in color.

  MIC Tight-buffered 024T88-33180-A3
- No substitutions.

Requirements - Copper backbone

- 6 Cat 6 cables shall be run from the MDF to each IDF.
- 3 Cat 6 cables shall be run from the phone Dmark to the MDF.
- Copper cable shall be Category 6 cable. Green in color
- Connector shall be Leviton part # 61110-RV6 eXtreme 6 connector.
- Each cable shall be terminated on the patch panel in data closets.
- Each cable end shall be terminated using the T568B pin/pair assignment.
- No substitutions.

Cable Installation

- Properly support horizontal cables in ceiling every 4'-5' using J-Hooks or cable tray only. (no slings, pouches, or D rings.)
- Place horizontal cables in pathways and spaces dedicated for communications cables. No pathways shall be in or above the red iron. Data cable will be run in separate pathways from all other cables.
- Provide 30' of slack at station end in ceiling and not inside wall.
- Slack shall be rolled neatly in a 2' loop and hanging from a j-hook in ceiling above drop location.
- Cat 6 data cables are to be terminated using the T568B standard.
- Leviton face plates that support 6 snap in jacks will be used with Leviton snap in blanks in unused slots.
- Ensure terminations are at 180 degrees to the jack with no more than ¼" un-twisting and no more than ½" un-jacketing and are in accordance with manufacturer's recommendations.
- Ensure terminations have no un-twisting and that tower separators are utilized to separate pairs.
- Ensure pulling tensions of cables are not exceeded.
- Maintain proper cable bend radius of 4 times the cable's outer diameter during placement.
- No splices are permitted.
- No link shall exceed 90 meters. Contractor is responsible for verifying proper footages.
- Pull one additional "Mule Tape" or ¼" Nylon rope when pulling cables through any conduit utilizing existing pull string.
- Mule Tape or Nylon rope is to be pulled into conduit separately and after all other cables have been installed.
- Install sleeves when puncturing walls.
- Cable shall not be installed between cinder block walls and roof decking.
- Cable shall not be installed between red iron and roof decking.
- Firestop all sleeves and conduit openings after cable installation.
- Terminate all pairs and conductors at all ends according to manufacturer's instructions following color code sequence.
- No splices are permitted in any fiber optic cable except when terminating connectors
- Terminate all Fiber pairs.
- All optical fiber cable shall be installed in the fiber panels in accordance with the manufacturer's instructions.
- Optical fiber Back bone cable length shall not exceed 300 meters.
- Copper backbone cable length shall not exceed 90 meters.
- All back bone cables (Fiber and Copper) shall have 20' of slack at both ends.
- Corning rack mount fiber patch panels are to be used where applicable.
- Outdoor rated fiber will be used for all outdoor fiber runs.
- Stress relief cable and the appropriate building fastener will be used on all aerial runs.
- All aerial cables will be fastened to the stress relief cables.
- 3" conduit is to be used for all buried runs, accessible at each end, with a pull string inside.
- A trace wire and warning tape will be buried with all buried runs
- All bends in conduit will be made with sweeps.
- Back bone cabling shall utilize a star topology with no more than 2 levels of backbone.
- Utilize Velcro ONLY in all closets.
- Install all components in a neat and workmanlike manner.
- Install all horizontal cables and termination frames in accordance with manufacturer's recommendations.

Labeling

- Label shall be a rap type with number printed multiple times enabling print to be legible from any angle.
- Machine label all termination panels and face plates with cabinet and cable number.
- Termination panels shall be labeled in numerical order.
- A single drop will be labeled a total of four times. The labels will be located on the patch panel in the rack, on both ends of the cable, and on the face plate at the work station end. The labels are to read exactly the same in all four locations.
- All 5' patch cables will be labeled at both ends. 5' cables will be installed at the cabinet.
- Numbering scheme will be 00-000 where the first two digits are the cabinet number and the last three are the drop number. Example, drop number 75 in cabinet 2 will read, 02-075.
- Camera drop labels numerically start at 500 in each cabinet. If camera drops already exist in said cabinet the next available consecutive number will be used.
- WiFi drop labels numerically start at 800 in each cabinet. If WiFi drops already exist in said cabinet the next available consecutive number will be used.

  Example for cabinet 1:
  Data (blue cable orange jacks) 01-001 to 01-499
  Camera (white cable white jacks) 01-500 to 01-799
  WiFi (yellow cable yellow jacks) 01-800 to 01-999
- Label all fiber optic cables at both ends on the cable and in the break out box

Test

- Test results for all Category 6 copper and fiber optic cables shall be provided to Moore Public Schools, Technology department.

End of Section

Communications Equipment Room Fittings

Equipment rack

- Free standing equipment rack shall be Chatsworth #55053-703.
- Free standing racks shall be sized to accept 19" spaced equipment and handle a total weight load of 1, 000 pounds.
- Free standing racks shall have 3" side rails tapped on both sides with universal hole patterns for threaded 12-24 screws.
- No substitutions.

Copper Patch panels

- Patch panel shall be a Leviton #49255-H24 Quick Port 110 panel with cable management bar.
- Patch panel shall have 24 ports taking up 1 rack mount unit.
- No substitutions.

Horizontal cable management

- Horizontal cable manager shall be a 2 RU Chatsworth part #30130-719.
- No substitutions.

Vertical cable management

- Vertical cable manager shall be Chatsworth part #30095-703.
- No substitutions.

Optical fiber patch panel / enclosure

- Optical fiber enclosure shall be Corning LC loaded rack mount panel.

  CCH-04U
  CCH-01U
  CCH-CP24-E4
  SOC-LC-900-OM4
- No substitutions.

Ladder racking

- Ladder racking shall be Chatsworth #10250-718.
- The appropriate Chatsworth mounting hardware shall be used.
- No substitutions.

Power protection power strips

- PDU's are to be placed in all data racks.
- PDU shall have overload protection and easy to reset circuit breaker.
- PDU shall be rack mountable.
- PDU shall be constructed from 18 AWG steel.
- PDU shall have light emitting diodes to indicate "Power On" and "Ground/Polarity OK" feature.
- PDU shall be rated for 20 Amps and have a 12' L5-20P plug and ten 5-20R receptacles.
- No substitutions.

Installation

Free standing racks

- Assemble free standing racks according to manufacturer's instructions. Verify that equipment mounting rails are sized properly for rack-mount equipment before attaching the rack to the floor.
- All racks must be attached to the floor in four places using appropriate floor mounting anchors. When placed over a raised floor, threaded rods should pass through the raised floor tile and be secured in the structural floor below.
- All rack must be secured to the adjacent wall using ladder rack to stabilize the top of the rack and provide a cable pathway from the ceiling to the rack.
- Racks shall be grounded to the telecommunications bus bar using #6 AWG green insulated solid copper wire and any necessary attachment hardware provided by the Communications Contractor.
- Mount rack mount power strips on rack where active equipment will be placed.

Ladder rack

- Ladder rack shall be attached to the top of the rack to deliver cables to the rack. The rack should not be drilled to attach ladder rack. Use appropriate hardware from the ladder rack manufacturer.
- Ladder racking shall be supported every 5' with 3/8" threaded rod anchored and secured to permanent ceiling structure.
- Loading of cable rack shall not exceed 6" depth and should have retainers every 12" to prevent cables from spilling over the sides.
- Where ladder racking butts up against wall the appropriately sized wall mount bracket shall be utilized.
- Ladder rack shall extend vertically up wall and through drop ceiling to gain access to cavity above drop ceiling.
- Ladder racking shall utilize all appropriate radius drop stringers, corner bends and other devices to maintain cable bend radius when entering and exiting racks, cabinets and drop ceilings
- Mating pieces of ladder racking together shall utilize appropriate butt splice and junction splice kits.
- All cut and exposed sharp ends shall utilize a plastic end cap to prevent injury.

Cable management

- Vertical cable manager shall be installed on every rack vertical rail. Where two rack rails will be butted together there shall be two vertical wire managers between the racks.
- Horizontal wire managers shall be utilized above and below every copper and fiber patch panel.
- All cables shall sweep in and out of any cable management product without a deformation of cable jacket.
- Ensure cables are properly supported when using cable management to ensure cables do not sag.
- Utilize Velcro ONLY for securing of cables on cable management.

Copper and Fiber patching panels

- Route all cables to backside of termination panels in an asymmetrical orientation to ensure cable bundles are split evenly.
- Utilize rear wire management bars for supporting cables into point of termination.
- Secure all cables on all panels using Velcro ONLY to prevent cables from pulling away.

End of Section

Quality Assurance

- Install all components as directed by Manufacturer's installation guidelines.
- All products shall bear the mark of UL or ETL for performance level.
- System installation shall meet all applicable Local/State codes and safety requirements where project is located.
- All products shall be new and un-used in original packaging.
- Follow and adhere to installation practices specified by the applicable Telecommunications Industry Association standards.
- Follow and adhere to installation practices specified by BICSI Information Transport System Installation.
- Follow and adhere to installation practices specified by BICSI Telecommunications Distribution Methods.
- Follow and adhere to installation practices specified by NFPA-70 National Electric Code.
- Follow and adhere to installation practices specified by the Manufacturers.
- Contractor shall make available all ceiling and termination work for inspection by Manufacturer's representative or owner's representative.
- Contractor shall replace all defective components.

Bidder/Installer Qualifications

- Bidding Contractor shall be a licensed to install telecommunications systems in the state where work will be performed.
- Bidding Contractor shall be Leviton certified for at least one year
- Bidding Contractor shall have a minimum of 5 years experience installing structured cabling for telecommunications.
- Bidding Contractor shall have the capability to bond project in its entirety.
- Bidding Contractor shall be able to provide insurance at the request of the owner.
- Installer shall have an onsite supervisor and one technician who are certified by the Manufacturer to install the Manufacturer's telecommunications products.
- Communications Contractor shall have an RCDD on staff for at least one year, to certify that the Communications System can support the required applications on the various cabling media.
- Installer shall have obtained Leviton certification from the Manufacturer within 1 year prior to performing the Work.

Delivery, Storage, and Protection

- Communications Contractor shall ensure that materials delivery to work area shall be coordinated with construction site manager responsible for materials distribution to all trades.
- Communications Contractor is responsible for all materials, tools and vehicles left on the job site.
- Communications Contractor shall coordinate a disposal bin for the removal of all trash produced by the Communications Contractor personnel during the project.
- Communications Contractor shall ensure materials are stored in an environmental area where:

  Temperature does not exceed 120 degrees Fahrenheit nor below 32 degrees Fahrenheit.
  Humidity does not exceed 80 %.
  No direct exposure to sunlight.
- Follow Manufacturer's recommendations for handling of materials.

Warranty

- Communications Contractor shall provide a 1 year parts and labor warranty against defective workmanship and/or system component failure.
- Communications Contractor shall execute a Lifetime Applications Assurance Warranty for parts and labor to support stated applications from the connectivity Manufacturer.

End of Section

Intercom System Specifications

Part 1 - General

1.01 System Manufacture

- Intercom System Manufacturer shall be Telecor or Rauland Telecenter U IP (Match existing system.)
- Cable Manufacturer shall be Belden or Equivalent

  Locations where Telecor equipment is required. It may be purchased from the following authorized Telecor dealers
  Advanced Cabling, Inc - 405-418-4322
  High-Tech Tronics, Inc - 405-495-0215

  Locations where TelecenterU Equipment is required. It may be purchased from the following authorized TelecenterU dealer: Endex of Oklahoma Inc - 405-602-0001

1.02a Intercom Systems Equipment Description - Telecor Intercom Equipment

- Intercom call in button shall be momentary close and compatible with existing intercom system
- Intercom ceiling speakers shall be Manufacture Clarity Model # S-522. (Or equivalent approved by MPS must have volume control accessible from the floor)
- Intercom outside paging horn shall be Manufacture Rauland Borg 3601. (Or equivalent approved by MPS)
- Locations where Telecor equipment is required. It may be purchased from the following authorized Telecor dealers
  Advanced Cabling, Inc - 405-418-4322
  High-Tech Tronics, Inc - 405-495-0215

1.02b Intercom Systems Equipment Description - Rauland Telecenter U IP Intercom Equipment

- Classroom Intercom Equipment
  - Call button shall be Part # 603302 Dual Level call switch.
  - Ceiling speakers shall be Part # BAFKIT2X2L6RJ - 8 Ohm ceiling tile replacement speaker with RJ45 connector.
  - IP Classroom Module shall be TCC2011 IP Module (*Module required for each classroom, *Requires POE network drop)
- Hallway/Commons/Outside Intercom Equipment
  - TCC2022-IP Zone page module (*Requires POE network drop)
  - Appropriate size amp for quantity of speakers.
  - BAFKIT2X2L- 25 volt ceiling tile replacement paging speaker (For all classroom & hallway locations)
  - Rauland Borg 3601 - Loud paging horn (For all outside & large area locations such as gymnasiums, etc.)

  Locations where TelecenterU equipment is required. It may be purchased from the following authorized TelecenterU dealer
  Endex of Oklahoma Inc - 405-602-0001

1.03 Systems Installation

- All non-IP cabling shall be shielded and have a minimum of 5 conductors.
- All network IP cabling shall be Cat6 (see structured cabling System Specifications for cabling information)
- All wire shall be shielded and have a minimum of 5 conductors.
- All circuits and wiring shall be labeled at all terminating ends.
- All devices shall be mounted according to the manufactures specifications.
- All devices shall be properly adjusted and tested prior to job completion.
- All room circuits shall run from the intercom system to the call button then to the room speaker.
- All extra speaker wire taps shall be insulated.
- All rooms shall be individually wired and terminated at the intercom system on individual points. (No Doubling)
- All rooms shall be tested to verify proper room number programming and operation.
- All call buttons shall be labeled with their corresponding system point number.
- Protective grommets shall be installed on all conduits to protect wire.
- All wire shall be run in J hooks above ceiling with a minimum space of 4" from ceiling deck. All wire shall be in separate pathways 6" from other system wiring. No wire ties allowed. No wire shall be run between the red iron and roof deck.
- All wire ran between building shall be in conduit and shall be direct burial cable. It shall be a minimum of 5 conductor 18 AWG copper.
- Installer shall supply the electrical and or masonry contractors with specialty back boxes and coordinate with them to ensure that all necessary conduits, back boxes, etc. are installed in the proper locations.
- Follow and adhere to installation practices specified by NFPA-70 National Electric Code, Edition 2008.
- Follow and adhere to installation practices specified by the Manufacturers.

1.04 Quality Assurance

1.03.01 Qualifications

- Install all components as directed by Manufacturer's installation guidelines.
- All products shall bear the mark of UL or ETL for performance level.
- System installation shall meet all applicable Local/State codes and safety requirements where project is located.
- All products shall be new and un-used in original packaging.

1.03.02 Bidder/Installer Qualifications

- Bidding contractor shall have a minimum of 5 years experience installing school intercom systems.
- Bidding contractor shall be able to provide insurance at the request of the owner.

1.05 Delivery, Storage, and Protection

- Contractor shall ensure that materials delivery to work area shall be coordinated with construction site manager responsible for materials distribution to all trades.
- Contractor is responsible for all materials, tools and vehicles left on the job site.
- Follow Manufacturer's recommendations for handling of materials.

1.06 Scheduling

- Contractor shall provide a detailed construction schedule with hard dates for completion of roughing in cables, terminations and testing once scheduling sequence has been determined to the Owner's Project Manager.

1.07 Warranty

- Contractor shall provide a 1 year parts and labor warranty against defective workmanship and/or system component failure.

Part 3 - Execution

3.01 Field Quality Control

- Contractor shall make available all ceiling and termination work for inspection by Manufacturer's representative or owner's representative.
- Contractor shall replace all defective components.

3.02 Adjusting

- No additional work outside of the contract scope of work shall be completed without the approval of the Owner or Owner's representative.

3.03 Protection

- It is the responsibility of the Contractor to ensure equipment is protected from dust and water during the project with appropriate materials.
- Remove all protective covers and protective materials from equipment prior to turnover to Owner.

3.04 Schedules

- Coordinate work with Owner's project manager and follow scheduling sequence as established by Owner's project manager.
- It is recommended that the Contractor schedule closely with any other systems contractor to ensure turnover date is met.
- Contractor bidding will supply the electrical and or masonry contractors with any specialty back boxes such as clock recessed back boxes etc. and coordinate with them to ensure that all necessary conduits, back boxes, etc. are installed in the proper locations.

End of Section

1.04 Submittals

1.04.01 Prior to installation

- Show compete map of system design for approval by Owner.

3.02 System Requirements

Intercom system shall be capable of communicating to all rooms and shall have adequate number of room points as to not double up on any given point.

End of Section

Intercom System Installation Completion Check List

Part 1 - General

1.01 Section Includes

- Intercom System Completion Check List

1.02 Completion Check List

- Main control panel has a map of the entire system inside and a copy has been given to Jack Phillips with MPS.
- All intercom programming such as bell times, tornado drill alert, etc has been checked and is correct.
- Intercom has been tested for proper operation.
- All rooms have been tested to verify proper description at console.
- All speakers have been tested to verify proper operation and volume.
- All extra speaker wires have been tapped or insulated
- All call buttons are labeled and have been tested for proper operation.

End of Section

Clock System Specifications

Part 1 - General

1.01 System Manufacture

- Clock Equipment shall match existing system. (Must be compatible with schools existing system.)

  Locations where Telecor equipment is required. It may be purchased from the following authorized Telecor dealers

  Advanced Cabling, Inc - 405-418-4322
  High-Tech Tronics, Inc - 405-495-0215

1.02 Intercom Clock Systems Equipment Description

- Intercom Digital Clocks shall be hard wired and may not use battery power for its primary power source. Clocks shall be 4 inch and be compatible with existing system. Clocks must be compatible with existing clock system.

AGP
the Abla Griffin Partnership L.L.C.
201 N. BROADWAY
SUITE 210
MOORE, OK. 73160
405.735.3477
AGP@theAGP.net
www.theAGP.net

CEDAR CREEK
CIVIL

KFC ENGINEERING
STRUCTURAL

SALAS O'BRIEN
MECHANICAL / ELECTRICAL

NY
drawn by

NY
checked by

JULY 2023
date

revisions

MOORE PUBLIC SCHOOLS
BOARD OF EDUCATION
MOORE, OKLAHOMA

MOORE Public Schools
LEARNING FOR LIFE

CLASSROOM ADDITION
HIGHLAND WEST
JUNIOR HIGH SCHOOL

sheet no:

T501

Salas O'Brien
2600 Van Buren St., Suite 2635
Norman, OK 73072
Salas O'Brien Registration: CA# 7058
Expiration Date : 6/30/2025
Salas O'Brien Project Number: 2023-02792-00

OWNERSHIP USE OF DOCUMENTS:

AGP EXPRESSLY RESERVES ITS COPYRIGHT AND OTHER PROPERTY RIGHTS OF ALL PLANS AND DRAWINGS DESIGNED AND/OR PRODUCED. PLANS AND DRAWINGS ARE NOT TO BE REPRODUCED IN ANY FORM OR MANNER WITHOUT THE EXPRESSED WRITTEN CONSENT OF AGP.

- Intercom 12" Analog Clock shall be hard wired and may not use battery power for its primary power source. Clock must be compatible with existing clock system.

- If site does not have an existing working clock system, stand-alone battery powered clocks shall be used.
  Stand-alone wall clock shall be
  American Time E56BAQD304BP

  Stand-alone dual face hallway clock shall be
  American Time E93BAQD204BP
  An 110v electric clock receptacle shall be installed at each clock location for future devices.

1.03 Systems Installation

- All devices shall be mounted according to the manufactures specifications.
- All devices shall be properly adjusted and tested prior to job completion.
- All extra wire taps shall be insulated.
- Protective grommets shall be installed on all conduits to protect wire.
- All wire shall be run in J hooks above ceiling with a minimum space of 4" from ceiling deck. All wire shall be in separate pathways 6" from other system wiring. No wire ties allowed.
- All wire ran between building shall be in conduit and shall be direct burial cable. It shall be a minimum of 5 conductor 18 AWG copper.
- Installer shall supply the electrical and or masonry contractors with specialty back boxes such as clock recessed back boxes etc. and coordinate with them to ensure that all necessary conduits, back boxes, etc. are installed in the proper locations.
- Follow and adhere to installation practices specified by NFPA-70 National Electric Code, Edition 2008.
- Follow and adhere to installation practices specified by the Manufacturers.

1.04 Quality Assurance

1.04.01 Qualifications

- Install all components as directed by Manufacturer's installation guidelines.
- All products shall bear the mark of UL or ETL for performance level.
- System installation shall meet all applicable Local/State codes and safety requirements where project is located.
- All products shall be new and un-used in original packaging.

1.04.02 Bidder/Installer Qualifications

- Bidding contractor shall have a minimum of 5 years experience installing school intercom systems.
- Bidding contractor shall be able to provide insurance at the request of the owner.

1.05 Delivery, Storage, and Protection

- Contractor shall ensure that materials delivery to work area shall be coordinated with construction site manager responsible for materials distribution to all trades.
- Contractor is responsible for all materials, tools and vehicles left on the job site.
- Follow Manufacturer's recommendations for handling of materials.

1.06 Scheduling

- Contractor shall provide a detailed construction schedule with hard dates for completion of roughing in cables, terminations and testing once scheduling sequence has been determined to the Owner's Project Manager.

1.07 Warranty

- Contractor shall provide a 1 year parts and labor warranty against defective workmanship and/or system component failure.

Part 3 - Execution

3.01 Field Quality Control

- Contractor shall make available all ceiling and termination work for inspection by Manufacturer's representative or owner's representative.
- Contractor shall replace all defective components.

3.02 Adjusting

- No additional work outside of the contract scope of work shall be completed without the approval of the Owner or Owner's representative.

3.03 Protection

- It is the responsibility of the Contractor to ensure equipment is protected from dust and water during the project with appropriate materials.
- Remove all protective covers and protective materials from equipment prior to turnover to Owner.

3.04 Schedules

- Coordinate work with Owner's project manager and follow scheduling sequence as established by Owner's project manager.
- It is recommended that the Contractor schedule closely with any other systems contractor to ensure turnover date is met.
- Contractor bidding will supply the electrical and or masonry contractors with any specialty back boxes such as clock recessed back boxes etc. and coordinate with them to ensure that all necessary conduits, back boxes, etc. are installed in the proper locations.

End of Section

1.04 Submittals

1.04.01 Prior to installation

- Show compete map of system design for approval by Owner.

End of Section

Clock System Installation
Completion Check List

Part 1 - General

1.01 Section Includes

- Clock System Completion Check List

1.02 Completion Check List

- All Clocks have been tested for proper operation and synchronization.

End of Section

Security System
Specifications

Part 1 - General

2.01 Manufacturers

- Security System Manufacturer shall be DSC or DMP. See plans for the specific manufacturer required.(no substitutions)
- Installer shall be certified by manufacturer to install and program the specified systems. (no substitutions)
- Peripheral device Manufacturers shall be according to equipment list. (No Substitutions)
- Cable Manufacturer shall be Genesis. (Or Equivalent)

Security Systems Equipment

- security alarm control shall be dsc model # pc4020 or dmp model # xr550nl-g. (no substitutions)
- security alarm control communicator shall be dsc model # t-linktl250. dpm n/a. (no substitutions)
- security alarm keypad shall be dsc model # lcd4501 or dmp model # 7873. (no substitutions)
- security alarm keypad for all kitchen locations shall be dsc model # lcd4501 or dmp model # 7073. (no substitutions)
- security alarm 8 zone hardwire expander shall be dsc model # pc4108 or dmp model # 714-8. (no substitutions)
- security alarm 16 zone hardwire expander shall be dsc model # pc4116 or dmp model # 714-16. (no substitutions)
- security alarm power supply shall be dsc model # pc4204 or dmp systems = altronix model # smp3pmctx. (no substitutions)
- security alarm power supply cabinet shall be dsc model # pc4051c. dmp n/a. (no substitutions)
- security alarm cabinet locks shall be dsc model # l11 or dmp model # 301. (no substitutions)
- security alarm 35'x35' motion detector shall be honeywell model # dt-8035. (no substitutions)
- security alarm 50'x60' motion detector shall be honeywell model # dt-8050. (no substitutions)
- security alarm window glass break sensor shall be honeywell model # fg-730. (no substitutions)
- security alarm door contact shall be ge model # 1076d-m. double pole double throw for all doors (no substitutions)
- each single door or double door shall be wired with 4 conductor wire.
- dmp systems shall be wired with 2 zones per single door or double door. one zone for security alarm and one zone for "door held open alert"
- security alarm c channel door magnets shall be gri model # mc180
- security alarm surface window contact shall be aleph model # ps-1541. (or equivalent approved by mps)
- security alarm overhead door & roof hatch contact shall be amseco model # odc-59a or for rail mount applications interlogix ge2315al. (no substitutions)
- security alarm indoor siren shall be ademco model # wave2ex. (no substitutions)
- security alarm outdoor siren shall be atw model # ds301set. (no substitutions)
- security alarm outdoor strobe shall be amseco model # sl401c. (no substitutions)

1.01 Systems Installation

- installer shall be certified by manufacturer to install & program the specified systems.
- installer shall perform all programming required to complete the installation. moore public schools shall not be required to assist in any part of the installation or programming.
- All alarm junctions and or splices shall be soldered and insulated.
- All circuits and wiring shall be labeled at all terminating ends.
- All devices shall be mounted according to the manufactures specifications.
- All devices shall be properly adjusted and tested prior to job completion.
- All zone expansion module shall be DMP 714-16 and Relay Output Module shall be DMP 860.
- All cabinets shall be labeled outside with their corresponding module and zone numbers and installed with lock.
- All cabinets shall be labeled inside with module number by the corresponding module and zone list definitions.
- Main control panel shall have a CAT 6 cable ran between the main control and the phone company DMARC for monitoring purposes.
- Each expansion cabinets shall have two non-sheilded16 gauge 4 conductor cables ran from the main control to the expansion cabinet.
- All devices such as motion detectors, glass break detectors, door contacts, Keypads etc. shall be labeled with their corresponding module and zone number. Label shall be visible from the floor.
- All motion detectors shall be sealed to prevent air and insects from entering.
- All steel doors shall have wide gap contacts installed.
- All door contacts shall be recessed and door magnets shall be glued in place.
- All keypads shall be wired individually back to new power supply.
- All sirens shall be wired individually and connected to new power supply.
- All devices such as door contact (double doors wire as one), motion detectors, glass break detectors, etc. shall be wired individually on separate zones with end of line resistors at the devices.
- All devices such as motion detectors, glass break detectors, door contacts, keypads, sirens, etc. shall be labeled with their corresponding module and or zone number. label shall be visible from the floor.
- All air conditioning condensers accessible from the outside and roof shall have pressure switches installed on the high pressure side and be connected to the security alarm.
- Protective grommets shall be installed on all conduits to protect wire.
- All devices shall be wired with NON shielded cable.
- All panels, power supplies and modules shall be grounded.
- All wire shall be run in J hooks above ceiling with a minimum space of 4" from ceiling deck. All wire shall be in separate pathways 6" from other system wiring. No wire ties allowed. No wire shall be run between the red iron and roof deck.
- All wire visible from the finished floor shall be covered in decorative wire molding.
- All wire ran between building shall be in conduit and shall be non shielded direct burial cable. It shall be a minimum of 4 conductor 16 AWG copper.
- Installer shall have a commercial burglar technician on the job site at all times during installation.
- Installer will work closely with the electrical and or masonry contractors to ensure conduit, back boxes, door frame access conduit, etc. are in the proper locations and accessible.
- Follow and adhere to installation practices specified by NFPA-70 National Electric Code, Edition 2008.
- Follow and adhere to installation practices specified by the Manufacturers.

1.02 Products Installed but not Supplied Under This Section

- All conduit and EMT required for Fire cabling pathway in/out of closets and in/out of wall cavities at the work area. EMT or Conduit for pathways shall have no more than two 90 degree sweeps and no continuous section over 100'.
- All core holes and poke through devices in the floor for the installation of Fire cabling.
- All core holes and EMT sleeves between floors for the routing of Fire cabling.
- Back boxes for the mounting of Fire Devices.
- Drag line or pull string at the back boxes fished through EMT or conduit to the other end for installing Fire Cabling.

1.03 Quality Assurance

1.03.01 Qualifications

- Install all components as directed by Manufacturer's installation guidelines.
- All products shall bear the mark of UL or ETL for performance level.
- System installation shall meet all applicable Local/State codes and safety requirements where project is located.
- All products shall be new and un-used in original packaging.

1.03.02 Bidder/Installer Qualifications

- Bidding contractor shall be a local licensed Commercial Burglar Alarm Company with licensed Commercial Burglar Alarm technician(s) on staff.
- bidding contractor shall be certified by manufacturer to install & program the specified systems.
- bidding contractor shall perform all programming required to complete the installation. moore public schools shall not be required to assist in any part of the installation or programming.
- bidding contractor shall have at least one year experience installing dsc/dmp equipment.
- bidding contractor shall have a minimum of 5 years experience installing commercial burglar alarms.
- bidding contractor shall be able to provide insurance at the request of the owner.
- bidding contractor shall have a commercial burglar technician on the job site at all times during installation

1.04 Delivery, Storage, and Protection

- Contractor shall ensure that materials delivery to work area shall be coordinated with construction site manager responsible for materials distribution to all trades.
- Contractor is responsible for all materials, tools and vehicles left on the job site.
- Follow Manufacturer's recommendations for handling of materials.

1.05 Project Conditions

1.05.01 Environmental Requirements

- Contractor shall ensure that any pollutants produced during the Work are disposed off according to local, state or national regulations. Follow the most stringent guidelines.
- It is preferred that the Contractor recycle any used or un-used components during the course of the construction project.

1.06 Sequencing

- Contractor shall coordinate with Owner's project manager on sequencing of various trades and construction teams for the lifecycle of the project.

1.07 Scheduling

- Contractor shall provide a detailed construction schedule with hard dates for completion of roughing in cables, terminations and testing once scheduling sequence has been determined to the Owner's Project Manager.

1.08 Warranty

- Contractor shall provide a 1 year parts and labor warranty against defective workmanship and/or system component failure. (1 year warranty shall begin at job completion)

Part 2 - Products

2.02 Source Quality Control

- Materials shall be purchased from Distributors authorized by system Manufacturers to sell new and unused components.

Part 3 -

3.01 Field Quality Control

- Contractor shall make available all ceiling and termination work for inspection by Manufacturer's representative or owner's representative.
- Contractor shall replace all defective components.

3.02 Adjusting

- No additional work outside of the contract scope of work shall be completed without the approval of the Owner or Owner's representative.

3.03 Cleaning

- Contractor shall sweep and mop the floors of all equipment rooms or connection point closets prior to turnover to the Owner.

3.04 Protection

- It is the responsibility of the Contractor to ensure equipment is protected from dust and water during the project with appropriate materials.
- Remove all protective covers and protective materials from equipment prior to turnover to Owner.

3.05 Schedules

- Coordinate work with Owner's project manager and follow scheduling sequence as established by Owner's project manager.
- It is recommended that the Contractor schedule closely with any other systems contractor to ensure turnover date is met.
- Contractor bidding will work closely with the electrical and or masonry contractors to ensure conduit, back boxes, door frame access conduit, etc. are in the proper locations and accessible.

End of Section

1.02 Submittals

1.03.01 Prior to installation

- Show compete map of system design for approval by Owner.

Security System Installation
Completion Check List

Part 1 - General

1.01 Section Includes

- Security System Completion Check List

1.02 Completion Check List

- A map of the entire system showing device numbers and wire routes has been left inside the main control panel and a copy has been given to Jack Phillips with MPS.
- All panel programming has been checked and is correct.
- Panel(s) has been tested for proper operation.
- All zones have been tested to verify proper description at keypad.
- All zones have been tested to verify proper reporting to the monitoring station.
- All zones have been tested to verify they are in their proper partition(s).
- All sirens and strobes have been tested for proper operation.
- All motion detectors have been adjusted for proper sensitivity and have been walk tested.
- All motion detectors have been sealed to prevent air and insects from entering.
- All glass break detectors have been adjusted for proper sensitivity and tested.
- All cabinets are labeled on the outside with module numbers and zone numbers.
- All cabinets are labeled on the inside with module numbers by the corresponding module and zone descriptions.
- All user codes have been programmed and tested for proper partition access.
- The monitoring station has the correct account information such as call list, zone descriptions etc.

End of Section

1.09 References

- NFPA-70 National Electrical Code 2008 edition
- NFPA-72 National Fire Alarm Code
- UL 1666 - Standard for Safety of Flame Propagation Height
- NFPA 262 - Flame Travel and Smoke of Wires and Cables
- Local Authority Having Jurisdiction

1.10 Definitions

AWG - American Wire Gauge

BICSI - Building Industry Consulting Service International

EIA - Electronics Industry Alliance

FCC - Federal Communications Commission

NECA - National Electrical Contractors Association

NFPA - National Fire Protection Agency

UL - Underwriters Laboratory

Access Control System
Specifications

Access Control Equipment

Part 1 - Manufacture

- Access Control Manufacturer shall be Keyscan. (No Substitutions)
- Peripheral device Manufacturers shall be according to equipment list. (No Substitutions)
- Cable Manufacturer shall be Genesis. (Or Equivalent)

1.01 Access Control Equipment Description

- Access Control System Manufacture shall be Keyscan (No Substitutions)
- Access Control Management Software = Aurora (This software is already installed and in use. It is listed for information purposes only)
- Reader Control Panels shall be (No Substitutions)
  Keyscan CA 4500 = 4 Door
  Keyscan CA 8500 = 8 Door
- Each Reader Control Panel shall be equipped with (2) 16VAC 40VA Transformer
- Each Reader Control Panel shall be equipped with (1) 12V 7AH Battery
- One 2,4 or 8 Door Reader Control Panel per site shall be equipped with (1) Keyscan Netcom2p module. If the site has an existing 2,4 or 8 Door Control Panel with a Netcom2P already installed, then a Netcom 2P is not needed and CIM or CIM-Link modules shall be used to connect the new Control Panel to the existing Control Panel.
- All Reader Control Panels shall be linked together with either CIM or CIM-Link modules.
- Each new Reader Control Panel shall be capable of 4 doors minimum

Card Readers shall be (No Substitutions)

- HID 40NKS00000000 Signo Wall Mount reader (for use in all locations except where mullion mount reader size is required to fit)
- HID 20NKS00000000 Signo 20 Mullion Reader (For use on mullion mount locations where single gang reader is too large.
- ALL READERS REQUIRE 22/6 STR OAS WIRE.

Access Control Strikes and locks shall be (No Substitutions unless approved by Moore Public Schools)
RCI 0163X32D ½ inch Rim(ONLY USE IF ⅞ INCH RIM WILL NOT FIT)
RCI 0162X32D ¾ inch Rim
RCI F0162X32D ¾ inch Rim Fire Rated
RCI F2164 RECESSED ALL-IN-ONE STRIKE

- Where storm doors are installed, install compatible power motor and power supply to activate door hardware unless installed by door contractor.
- Egress Motions shall be (No Substitutions)
  BOSCH DS160 OR HONEYWELL IS310
- Door Contacts shall be GE Model # 1076D-M Double Pole Double Throw (To be utilized for Access Control and Security Alarm) (See security alarm specs)
- DOOR LOCK RELEASE BUTTON SHALL BE (NO SUBSTITUTIONS)
  RCI PART # 909S ROCKER SWITCH
- Power Supply for locking hardware
  **Power supply in Keyscan Controller is for the Control and Readers only.
- Power Supplies shall be sized to meet requirements of Strikes and locks with a maximum of 80% amp load.
- Power Supply shall have form "C" contacts for supervision that is connected to Keyscan Control Aux Input.
- 24 VDC Securitron- AccuPower- AQM20-8C/16C, AQD5-8C or equal.

2.01 Systems Installation

- All junctions and or splices shall be soldered and insulated.
- All circuits and wiring shall be labeled at all terminating ends.
- All devices shall be mounted in accordance to the manufactures specifications.
- All devices shall be properly adjusted and tested prior to job completion.
- All controllers shall be labeled outside with their corresponding modules and installed with lock.
- All controllers shall have a Cat 6 network cable Blue in color ran from the nearest network cabinet and labeled with drop number.
- All card readers shall be labeled with their corresponding reader number.
- All doors with access control shall have contacts installed for door status indication. Steel doors shall have wide gap door contacts installed.
- All doors with access control shall have egress motions installed to allow system to detect proper egress. (including doors with panic exit hardware.)
- Protective grommets shall be installed on all conduits to protect wire.
- All panels, power supplies and modules shall be grounded.
- All wire shall be run in J hooks above ceiling with a minimum space of 6" from ceiling deck. All wire shall be in separate pathways 6" from other system wiring. No wire ties allowed. No wire shall be run between the red iron and roof deck.
- All wire visible from the finished floor shall be covered in decorative wire molding.
- All wire ran between building shall be in conduit and shall be direct burial cable.
- Installer shall have a licensed Access Control technician on the job site at all times during installation.
- Installer will work closely with the electrical and or masonry contractors to ensure conduit, back boxes, door frame access conduit, etc. are in the proper locations and accessible.
- Follow and adhere to installation practices specified by NFPA-70 National Electric Code, Edition 2008.
- Follow and adhere to installation practices specified by the Manufacturers.

3.01 Bidder/Installer Qualifications

- Bidding contractor shall be a local licensed Access Control Company with licensed Access Control technician(s) on staff.
- Bidding contractor shall have at least one year experience installing Keyscan Access Control Systems.
- Bidding contractor shall have a minimum of 5 years experience installing commercial Access Control Systems.
- Bidding contractor shall be able to provide insurance at the request of the owner.
- Bidding contractor shall have a commercial Access Control technician on the job site at all times during installation.

3.01.1 Submittals

3.01.2 Prior to installation

- Show compete map of system design for approval by Owner.

3.01.3 Prior to final acceptance

- Provide a soft CAD copy As-Built showing layout of Controller Panel, Card Readers, Power Supplies and all mounted equipment upon Substantial Completion.
- Ensure all warranties specify that the Owner is entitled to all rights guaranteed by the warranty for various components.

3.02 Quality Assurance

3.02.1 Qualifications

- Install all components as directed by Manufacturer's installation guidelines.
- All products shall bear the mark of UL or ETL for performance level.
- System installation shall meet all applicable Local/State codes and safety requirements where project is located.
- All products shall be new and un-used in original packaging.

Access Control Installation
Completion Check List

Part 4 - General

4.01 Section Includes

- Access Control System Completion Check List

4.02 Completion Check List

- A map of the entire system showing device numbers and wire routes has been left inside the main controller panel and a copy has been given to Rodney Cobb with MPS.
- All system programming has been checked and is correct.
- Panel(s) has been tested for proper operation.
- All card readers are labeled with reader number and have been tested to verify proper operation.
- All user card and key fobs have been programmed into system and tested to verify proper operation.
- All egress motion detectors have been adjusted for proper sensitivity and have been walk tested.
- All controllers are labeled on the outside with module numbers.
- All controllers are labeled on the inside with module numbers by the corresponding module.

AGP
the Abla Griffin Partnership L.L.C.

201 N. BROADWAY
SUITE 210
MOORE, OK. 73160
405.735.3477
AGP@theAGP.net
www.theAGP.net

CEDAR CREEK
CIVIL

KFC ENGINEERING
STRUCTURAL

SALAS O'BRIEN
MECHANICAL / ELECTRICAL

NY
drawn by

NY
checked by

JULY 2023
date

revisions

MOORE PUBLIC SCHOOLS
BOARD OF EDUCATION
MOORE, OKLAHOMA

MOORE Public Schools
LEARNING FOR LIFE

CLASSROOM ADDITION
HIGHLAND WEST
JUNIOR HIGH SCHOOL

sheet no:

T502

Salas O'Brien
2600 Van Buren St., Suite 2635
Norman, OK 73072
Salas O'Brien Registration: CA# 7058
Expiration Date : 6/30/2025

Salas O'Brien Project Number: 2023-02792-00

OWNERSHIP USE OF DOCUMENTS:

AGP EXPRESSLY RESERVES ITS COPYRIGHT AND OTHER PROPERTY RIGHTS OF ALL PLANS AND DRAWINGS DESIGNED AND/OR PRODUCED. PLANS AND DRAWINGS ARE NOT TO BE REPRODUCED IN ANY FORM OR MANNER WITHOUT THE EXPRESSED WRITTEN CONSENT OF AGP.

4.03 Products Installed but not Supplied Under This Section

- All conduit and EMT required for Fire cabling pathway in/out of closets and in/out of wall cavities at the work or Conduit for pathways shall have no more than two 90 degree sweeps and no continuous section over EMT 100'.
- All core holes and poke through devices in the floor for the installation of cabling.
- All core holes and EMT sleeves between floors for the routing of cabling.
- Back boxes for the mounting of Devices.
- Drag line or pull string at the back boxes fished through EMT or conduit to the other end for installing Cabling.

4.04 References

- NFPA-70 National Electrical Code 2008 edition
- NFPA-72 National Fire Alarm Code
- UL 1666 - Standard for Safety of Flame Propagation Height
- NFPA 262 - Flame Travel and Smoke of Wires and Cables
- Local Authority Having Jurisdiction

4.05 Definitions

AWG - American Wire Gauge

BICSI - Building Industry Consulting Service International

EIA - Electronics Industry Alliance

FCC - Federal Communications Commission

NECA - National Electrical Contractors Association

NFPA - National Fire Protection Agency

UL - Underwriters Laboratory

4.06 Delivery, Storage, and Protection

- Contractor shall ensure that materials delivery to work area shall be coordinated with construction site manager responsible for materials distribution to all trades.
- Contractor is responsible for all materials, tools and vehicles left on the job site.
- Follow Manufacturer's recommendations for handling of materials.

4.07 Project Conditions

4.07.1 Environmental Requirements

- Contractor shall ensure that any pollutants produced during the Work are disposed off according to local, state or national regulations. Follow the most stringent guidelines.
- It is preferred that the Contractor recycle any used or un-used components during the course of the construction project.

4.07.2 Field Measurements

- Contractor shall coordinate with electrical engineer on project that the main electrical service ground has a resistance to earth of less than 5 ohms.
- Contractor shall ensure that all field testers have been calibrated from the Manufacturer within 1 year.
- All field test results will be documented and submitted to Moore Public Schools, Technology Department.

4.08 Sequencing

- Contractor shall coordinate with Owner's project manager on sequencing of various trades and construction teams for the lifecycle of the project.

4.09 Scheduling

- Contractor shall provide a detailed construction schedule with hard dates for completion of roughing in cables, terminations and testing once scheduling sequence has been determined to the Owner's Project Manager.

4.10 Warranty

- Contractor shall provide a 1 year parts and labor warranty against defective workmanship and/or system component failure. (1 year warranty shall begin at job completion)

4.11 Source Quality Control

- Materials shall be purchased from Distributors authorized by system Manufacturers to sell new and unused components.

Part 5 -

5.01 Field Quality Control

- Contractor shall make available all ceiling and termination work for inspection by Manufacturer's representative or owner's representative.
- Contractor shall replace all defective components.

5.02 Adjusting

- No additional work outside of the contract scope of work shall be completed without the approval of the Owner or Owner's representative.

5.03 Cleaning

- Contractor shall sweep and mop the floors of all equipment rooms or connection point closets prior to turnover to the Owner.

5.04 Protection

- It is the responsibility of the Contractor to ensure equipment is protected from dust and water during the project with appropriate materials.
- Remove all protective covers and protective materials from equipment prior to turnover to Owner.

5.05 Schedules

- Coordinate work with Owner's project manager and follow scheduling sequence as established by Owner's project manager.
- It is recommended that the Contractor schedule closely with any other systems contractor to ensure turnover date is met.
- Contractor bidding will work closely with the electrical and or masonry contractors to ensure conduit, back boxes, door frame access conduit, etc. are in the proper locations and accessible.

End of Section

Fire System
Specifications

Part 1 - General

2.01 Manufacturers

- Fire System Manufacturer shall be Silent Knight. (No Substitutions)
- Notification appliance Manufacturer shall be System Sensor. (No Substitutions)
- Device Manufacture shall be as specified in equipment description. (No Substitutions)
- Cable Manufacturer shall be Genesis. (Or Equivalent)

1.03 Fire Systems Equipment Description

- **note:** contractor shall use sk protocol devices on all new installations. contractor shall replace all existing sd protocol devices connected to existing system with sk protocol.
- fire alarm control shall be silent knight model # 6820. (no substitutions)
- fire alarm distributed power module nac expansion shall be silent knight sk-ps6 / sk-ps10 or fire-lite model #'s fl-ps6 / fl-ps10. (no substitutions)
- fire alarm intelligent power supply shall be silent knight model # 5895xl. (no substitutions)
  NOTE: the 5895xl nac circuits will not sync with the main control panels nac circuits. if new nac circuit synchronization is required with existing nac circuits, use the sk-ps6/fl-ps6 or sk-ps10/fl-ps10
- fire alarm remote annunciator shall be silent knight model # 5860 (grey) and surface mount trim ring 5860tg (grey) shall be used if surface mounted. (no substitutions)
- fire alarm signaling line circuit expander shall be silent knight model # 5815xl. (no substitutions)

  sk protocol devices shall be
- fire alarm addressable manual pull station shall be silent knight model # sk-pull-da. (no substitutions)
- fire alarm addressable photoelectric smoke detector shall be silent knight model # sk-photo-w. (no substitutions)
- fire alarm addressable heat detector shall be silent knight model # sk-heat-w. (no substitutions)
- fire alarm base shall be silent knight model # b300-6. (no substitutions)
- smoke detectors in areas that require a co detector shall be sk-fire-co-w. (no substitutions)
- fire alarm addressable input module shall be silent knight model # sk-monitor or sk-monitor-2. (no substitutions)
- fire alarm addressable relay module shall be a silent knight model # sk-relay. (no substitutions)
- fire alarm slc line isolator shall be silent knight model # sk-iso. (no substitutions)
- fire alarm duct detectors and duct detector remote test stations shall be silent knight model #'s sk-duct and rts151key. if a form-c relay is required, please add an sk-relay. (no substitutions)
- fire alarm horn / strobe signaling device shall be system sensor model # p2wl. (model pc2wl can be substituted if mounted on non-stainable ceiling tile. no other substitutions)
- fire alarm strobe signaling device shall be system sensor model # swl. (model scwl can be substituted if mounted on non-stainable ceiling tile. no other substitutions)
- fire alarm strobe synch module shall be system sensor model # rmdl3. (not needed on version 9 panels or newer) (no substitutions)
- fire alarm outdoor strobe signaling device shall be system sensor model # p2rk. (no substitutions)
- fire alarm speaker / strobe signaling device shall be system sensor model # spswl. (model spscwl can be substituted if mounted on non-stainable ceiling tile. no other substitutions)
- fire alarm speaker signaling device shall be system sensor model # spwl. (no substitutions)
- fire alarm 50-watt voice evac system shall be as needed silent knight ske-450 (single zone), ske-450-zn4 (4 zone) or ske-450-zn6 (6 zone). (no substitutions)

1.01 Systems Installation

- All fire alarm junctions and or splices shall be soldered and insulated.
- All Ceiling mounted devices shall be mounted on non-stainable ceiling tiles. (BIDDING CONTRACTOR SHALL PROVIDE NON-STAINABLE TILE.)
- All circuits and wiring shall be labeled at all terminating ends.
- All fire system wiring shall be RED in color and non-shielded.
- All devices shall be mounted according to the manufactures specifications.
- All devices shall be properly adjusted and tested prior to job completion.
- All fire pulls shall be dual action.
- All Initiating Devices shall be labeled with their corresponding module and point number. Smoke detector label shall be on smoke detector and smoke detector base and be clearly visible from the finished floor.
- All Each Initiating Device Circuits (IDC) shall have Line Isolator Modules installed at the SLC Head End.
- All Initiating Device Circuits (IDC) shall be wired Class B (NFPA Style B).
- All Initiating Device Circuits (IDC) shall be wired with minimum 18 AWG gauge red NON Shielded cable.
- All duct detectors shall be connected to fire system and shall have remote test stations installed accessible and visible from the finished floor. They shall be labeled with their corresponding module and point number.
- All duct detector ARM / AIM shall be installed adjacent to the remote test stations and accessible and visible from the finished floor. They shall be labeled with their corresponding module and point number. (ARM/AIM should not be needed when using SD505-DUCTR duct det.)
- Each CO 1224T detectors shall have an SD500 AIM installed (No doubling), All CO1224T & SD500 AIM shall be labeled with their corresponding module and point number.
- All modules shall have their corresponding module number.
- All notification devices shall be wall mounted where possible. Where wire is exposed decorative wire molding shall be installed from the ceiling to the device. If ceiling mount devices are used they shall be mounted on a non-stainable ceiling tile
- All notification devices shall be labeled with their corresponding module, circuit number and device number. Label shall be on the base and be clearly visible from the finished floor. EOL Device shall be labeled as such.
- All horn / strobes and strobes shall be synchronized.
- All Notification Appliance Circuits (NAC) shall be wired Class B (NFPA Style Y).
- All Notification Appliance Circuits (NAC) shall be wired with minimum 16 AWG gauge red NON Shielded cable.
- Protective grommets shall be installed on all conduits to protect wire.
- All SBUS and SLC circuits shall be wired with red NON shielded cable.
- All wire shall be run in J hooks above ceiling with a minimum space of 4" from ceiling deck. All wire shall be in separate pathways 6" from other system wiring. No wire ties allowed. No wire shall be run between the red iron and roof deck.
- Main control panel shall have a CAT 6 cable ran between the main control and the phone company DMARC for monitoring purposes.
- All wire ran between building shall be in conduit and shall be non shielded direct burial cable. It shall be a minimum of 4 conductor 16 AWG copper.
- Installer shall have a commercial fire technician on the job site at all times during the installation.
- Installer shall supply the electrical and or masonry contractors with specialty back boxes such as remote annunciator recessed back boxes etc. and coordinate with them to ensure that all necessary conduits, back boxes, etc. are installed in the proper locations.
- Follow and adhere to installation practices specified by the applicable NFPA 72 standards.
- Follow and adhere to installation practices specified by NFPA-70 National Electric Code, Edition 2008.
- Follow and adhere to installation practices specified by the Manufacturers.

1.02 Products Installed but not Supplied Under This Section

- All conduit and EMT required for Fire cabling pathway in/out of closets and in/out of wall cavities at the work area. EMT or Conduit for pathways shall have no more than two 90 degree sweeps and no continuous section over 100'.
- All core holes and poke through devices in the floor for the installation of Fire cabling.
- All core holes and EMT sleeves between floors for the routing of Fire cabling.
- Back boxes for the mounting of Fire Devices.
- Drag line or pull string at the back boxes fished through EMT or conduit to the other end for installing Fire Cabling.

1.03 Quality Assurance

1.03.01 Qualifications

- Install all components as directed by Manufacturer's installation guidelines.
- All products shall bear the mark of UL or ETL for performance level.
- System installation shall meet all applicable Local/State codes and safety requirements where project is located.
- All products shall be new and un-used in original packaging.

1.03.02 Bidder/Installer Qualifications

- Bidding contractor shall be a local licensed Commercial Fire Alarm Company with licensed Commercial Fire Alarm technician(s) on staff.
- Bidding contractor shall have a minimum of one year experience installing Silent Knight Addressable fire panels.
- Bidding contractor shall have a minimum of 5 years experience installing commercial fire alarms.
- Bidding contractor shall be able to provide insurance at the request of the owner.
- Bidding contractor shall have a commercial fire technician on the job site at all times during the installation.

1.04 Sequencing

- Contractor shall coordinate with Owner's project manager on sequencing of various trades and construction teams for the lifecycle of the project.

1.05 Scheduling

- Contractor shall provide a detailed construction schedule with hard dates for completion of roughing in cables, terminations and testing once scheduling sequence has been determined to the Owner's Project Manager.

1.06 Warranty

- Contractor shall provide a 1 year parts and labor warranty against defective workmanship and/or system component failure. (1 year warranty shall begin at job completion)

Part 2 - Products

2.02 Source Quality Control

- Materials shall be purchased from Distributors authorized by system Manufacturers to sell new and unused components.

Part 3 -

3.01 Field Quality Control

- Contractor shall make available all ceiling and termination work for inspection by Manufacturer's representative or owner's representative.
- Contractor shall replace all defective components.

3.02 Adjusting

- No additional work outside of the contract scope of work shall be completed without the approval of the Owner or Owner's representative.

3.03 Protection

- It is the responsibility of the Contractor to ensure equipment is protected from dust and water during the project with appropriate materials.
- Remove all protective covers and protective materials from equipment prior to turnover to Owner.

End of Section

1.04 Submittals

1.04.01 Prior to installation

- Show compete map of system design for approval by Owner.

1.04.02 Prior to final acceptance

- Provide a soft CAD copy As-Built showing layout of panel, initiating devices, notification devices and all mounted equipment upon Substantial Completion.
- Ensure all warranties specify that the Owner is entitled to all rights guaranteed by the warranty for various components.

Fire System Installation
Completion Check List

Part 1 - General

1.01 Section Includes

- Fire System Completion Check List

1.02 Completion Check List

- A map of the entire system showing device numbers and wire routes has been left inside the main control panel and a copy has been given to Rodney Cobb with MPS.
- All panel programming has been checked and is correct.
- Panel(s) has been tested for proper operation.
- All zones have been tested to verify proper description at keypad.
- All zones have been tested to verify proper reporting to the monitoring station.
- All points have been tested to verify proper description at the keypad.
- All horn/strobes and strobes have been tested for proper operation.
- All smoke detectors have been tested and dust covers removed.
- All devices have been tested for proper operation.
- All cabinets are labeled on the outside with module numbers and point numbers.
- All cabinets are labeled on the inside with module numbers by the corresponding module and point descriptions.
- The monitoring station has the correct account information such as call list, zone descriptions, etc.

End of Section

IP camera Specifications

Moore Public Schools
IP camera Specifications

IP CAMERA MANUFACTURE is AVIGILON (NO SUBSTITUTIONS).

AVIGILON EQUIPMENT
INDOOR DOME SINGLE HEAD CAMERA REQUIRED EQUIPMENT LIST
4.0C-H5A-D1-IR
ACC7-ENT LICENSE - 1 per camera

INDOOR MULTI-HEAD 3 HEAD CAMERA REQUIRED EQUIPMENT LIST
9C-H4A-3MH-180 (3x3MP)
POE-INJ2-60W-NA Power Injector
ACC7-ENT LICENSE - 1 per camera
H4AMH-AD-CEIL1
H4AMH-DC-COVR1

INDOOR MULTI-HEAD 4 HEAD CAMERA REQUIRED EQUIPMENT LIST
12C-H4A-3MH-360 (4x3MP)
POE-INJ2-60W-NA Power Injector
ACC7-ENT LICENSE - 1 per camera
H4AMH-AD-CEIL1
H4AMH-DC-COVR1

OUTDOOR DOME **SINGLE HEAD CAMERA REQUIRED EQUIPMENT LIST**
6.0C-H5A-DO1-IR
ACC7-ENT LICENSE - 1 per camera

OUTDOOR MULTI-HEAD 3 HEAD CAMERA CORNER MOUNT REQUIRED EQUIPMENT LIST
15C-H4A-3MH-270 (3x5MP)
POE-INJ2-60W-NA Power Injector
ACC7-ENT LICENSE - 1 per camera
H4AMH-AD-PEND1
H4AMH-DO-COVR1
H4AMH-AD-IRIL1
H4-MT-CRNR1

OUTDOOR MULTI-HEAD 3 HEAD CAMERA WALL MOUNT REQUIRED EQUIPMENT LIST
15C-H4A-3MH-180 (3x5MP)
POE-INJ2-60W-NA Power Injector
ACC7-ENT LICENSE - 1 per camera
H4AMH-AD-PEND1
H4AMH-DO-COVR1
H4AMH-AD-IRIL1
IRPTZ-MNT-WALL1

INSTALLATION

- Install cameras on adjacent walls were possible. If it must be mounted on ceiling, it shall be on a water-resistant non-stainable ceiling tile. **MPS to have final determination of camera location and field of view) (Call Jack Phillips for final location and view phone 473-5225)**
- Any cameras installed on ceiling shall be mounted on a water-resistant non-stainable ceiling tile. (BIDDING CONTRACTOR SHALL PROVIDE NON-STAINABLE TILE)
- Each installed camera needs a camera license.
- All network drops shall be connected with patch cords to a switch at each rack location.
- No Substitutions.

Horizontal Cabling

Requirements

- See MPS Structured Cabling Specifications for camera network cabling installation, labelling and testing requirements.

Warranty

- Communications Contractor shall provide a 1 year parts and labor warranty against defective workmanship and/or system component failure.
- Communications Contractor shall execute a Lifetime Applications Assurance Warranty for parts and labor to support stated applications from the connectivity Manufacturer.

End of Section

Audio Visual Systems for Instructional Spaces Specifications

Part 1 - General

1.01 Instructional Spaces

- Reference technology drawings and detail sheet T504 for classroom configuration and part numbers.

1.02 Special Spaces

- Reference technology drawings and one line diagrams.

1.03 Flat Panel Displays

- All non interactive Flat Panel displays shall be 43" Samsung BE Series.
- Bio Lab 37 displays shall be ceiling mounted.
- Career Tech 12 and Career Tech 15 displays shall be wall mounted 55" AFF to center of display.

End of Section

AGP
the Abla Griffin Partnership L.L.C.
201 N. BROADWAY
SUITE 210
MOORE, OK. 73160
405.735.3477
AGP@theAGP.net
www.theAGP.net

CEDAR CREEK
CIVIL

KFC ENGINEERING
STRUCTURAL

SALAS O'BRIEN
MECHANICAL / ELECTRICAL

NY
drawn by

NY
checked by

JULY 2023
date

revisions

MOORE PUBLIC SCHOOLS
BOARD OF EDUCATION
MOORE, OKLAHOMA

MOORE Public Schools
LEARNING FOR LIFE

CLASSROOM ADDITION
HIGHLAND WEST
JUNIOR HIGH SCHOOL

sheet no:

T503

Salas O'Brien
2600 Van Buren St., Suite 2635
Norman, OK 73072
Salas O'Brien Registration: CA# 7058
Expiration Date : 6/30/2025
Salas O'Brien Project Number: 2023-027792-00

OWNERSHIP USE OF DOCUMENTS:

AGP EXPRESSLY RESERVES ITS COPYRIGHT AND OTHER PROPERTY RIGHTS OF ALL PLANS AND DRAWINGS DESIGNED AND/OR PRODUCED. PLANS AND DRAWINGS ARE NOT TO BE REPRODUCED IN ANY FORM OR MANNER WITHOUT THE EXPRESSED WRITTEN CONSENT OF AGP.

Moore Public Schools
Video Intercom Door System Specifications

MANUFACTURE
AVIGILON (NO SUBSTITUTIONS).

AVIGILON REQUIRED EQUIPMENT

3.0CH4VIRO1-IR
3.0 MP; H4 Video Intercom; WDR;LightCatcher; Day/Night; 1.83mm
f/2.4; Integrated IR; Recessed Mount

H4VI-AC-RELY1
Safety Relay for H4 Video Intercom

H4VI-MT-SURF1
Surface mount adapter for H4 Video Intercom

ACC7-ENT
ACC 7 Enterprise camera channel license

INSTALLATION

- Video Intercom system requires a Cat 6 network drop ran to the nearest IDF
- Video Intercom system requires an 18 gauge 4 conductor cable ran between the video intercom station and the entry door Keyscan controller unit. **MPS to have final determination of camera location and field of view) (Call Jack Phillips for final location and view phone 473-5225)**
- Each installed Video Intercom System requires a license.
- All network drops shall be connected with patch cords to a switch at each rack location.
- No Substitutions.

Horizontal Cabling

Requirements

- See MPS Structured Cabling Specifications for camera network cabling installation, labelling and testing requirements.

Warranty

- Contractor shall provide a 1 year parts and labor warranty against defective workmanship and/or system component failure.

- Contractor shall execute a Lifetime Applications Assurance Warranty for parts and labor to support stated applications from the connectivity Manufacturer.

End of Section

AGP
the Abla Griffin Partnership L.L.C.
201 N. BROADWAY
SUITE 210
MOORE, OK. 73160
405.735.3477
AGP@theAGP.net
www.theAGP.net

CEDAR CREEK
CIVIL

KFC ENGINEERING
STRUCTURAL

SALAS O'BRIEN
MECHANICAL / ELECTRICAL

NY
drawn by

NY
checked by

JULY 2023
date

revisions

MOORE PUBLIC SCHOOLS
BOARD OF EDUCATION
MOORE, OKLAHOMA

MOORE Public Schools
LEARNING FOR LIFE

CLASSROOM ADDITION
HIGHLAND WEST
JUNIOR HIGH SCHOOL

sheet no:

T504

Salas O'Brien
2600 Van Buren St., Suite 2635
Norman, OK 73072
Salas O'Brien Registration: CA# 7058
Expiration Date : 6/30/2025
Salas O'Brien Project Number: 2023-02792-00

OWNERSHIP USE OF DOCUMENTS:

AGP EXPRESSLY RESERVES ITS COPYRIGHT AND OTHER PROPERTY RIGHTS OF ALL PLANS AND DRAWINGS DESIGNED AND/OR PRODUCED. PLANS AND DRAWINGS ARE NOT TO BE REPRODUCED IN ANY FORM OR MANNER WITHOUT THE EXPRESSED WRITTEN CONSENT OF AGP.

City of Moore – Garver Drainage Review Checklist

Project ID: Highland West CP1
Review Round: Round 1
Review Date: 09/13/23

Item Adequately Addressed?			Item Description	Comments	Designer Response	Response Date
Y	N	N/A				
General						
☐	☒	☐	Project name and location	Include location address	Address added to title block	9.25.23
☒	☐	☐	Vicinity map			
☐	☒	☐	Benchmark/Vertical and horizontal datum information	Please include	Benchmark data added to cover sheet and grading plans	9.25.23
☒	☐	☐	Legal description/survey			
☐	☒	☐	Site/Grading Plan	See notes regarding proposed grading plan	No notes found. Grading plan added	9.25.23
☒	☐	☐	Erosion Control Plan	No erosion control plan. Only reviewed for general site drainage elements		
☒	☐	☐	General notes and quantities	No quantities. Only reviewed for general site drainage elements		
☒	☐	☐	Standards	Only reviewed for general site drainage elements		
☒	☐	☐	Section, township, range, ¼ section			
☒	☐	☐	Label local streets			
☒	☐	☐	Major drainageways and facilities shown			
☐	☐	☐	Names of surrounding developments	Please annotate if applicable	Not applicable	9.25.23
Drainage Map						
☒	☐	☐	Pre-development drainage area map			
☒	☐	☐	Post-development drainage area map			
☐	☒	☐	Effective FEMA SFHA limits provided and shown in plans	Include FIRMette in report	FIRMette added to report	9.25.23
☒	☐	☐	Offsite drainage shown and labeled			
☒	☐	☐	Locate and label any existing storm sewer			
☐	☐	☒	Finished floor elevation noted on all flood prone structures			
Drainage Report						
☐	☐	☐	Certification statement	Please include standard certification statement per design criteria	Certification added to cover sheet	9.25.23
☐	☒	☐	Design rainfall used	Please note source in report	Source added to report	9.25.23

City of Moore – Garver Drainage Review Checklist

Project ID: Highland West CP1
Review Round: Round 1
Review Date: 09/13/23

Item Adequately Addressed?			Item Description	Comments	Designer Response	Response Date
Y	N	N/A				
☐	☐	☒	Runoff calculations – Rational Method < 20 acres			
☐	☐	☒	Runoff calculations – Unit hydrograph > 20 acres			
☐	☒	☐	Longest flow path lengths	See notes on plan	No notes shown on plans. Min. 5 used	9.25.23
☒	☐	☐	Land use type			
☐	☐	☒	Routing of off-site drainage flow through development			
☒	☐	☐	Proposed storm sewers and open drainageways including inlets, manholes, culverts, retaining walls, erosion control measures, and other appurtenances			
☐	☐	☒	Hydraulic analysis for all bridges, culverts, hydraulic structures, natural open channels, and improved open channels			
Detention						
☐	☐	☒	Development less than 1 acre or fee-in-lieu of detention has been permitted			
☐	☐	☐	Unit hydrograph for 2-year, 5-year, 10-year, 50-year, and 100-year storm events			
☒	☐	☐	Pre-project peak discharge			
☒	☐	☐	Post-project peak discharge			
☐	☒	☐	Outlet configuration	Orifice plate will operate as weir until submerged. Please update calculations accordingly.	Hydrocad automatically uses weir flow calculations for low head value situation	9.25.23
☒	☐	☐	Inflow and outflow hydrographs			
Open Space Detention						
☐	☒	☐	Freeboard (See Table 2: City of Moore Stormwater Management Criteria)	One foot of freeboard required	Adjusted to obtain 1’	9.25.23
☐	☐	☒	Emergency spillway – pass the difference between the 500-year and 100-year storm discharge with the required free board			
☐	☐	☒	Erosion control measures at outlet and spillway			
☐	☒	☐	Grass slopes no steeper than 4:1, riprap no steeper than 2:1, minimum 2% slope in grassed facility	Slopes are too steep	Adjusted to 4:1	9.25.23

City of Moore – Garver Drainage Review Checklist

Project ID: Highland West CP1
Review Round: Round 1
Review Date: 09/13/23

Item Adequately Addressed?			Item Description	Comments	Designer Response	Response Date
Y	N	N/A				
☐	☐	☒	Trickle channel (longitudinal slope > 0.5%)			
☐	☐	☒	Maintenance Access			
Parking Lot Detention						
☐	☐	☒	Meets allowable ponding depth – 12 to 18 inches for 100-year flood and 9 inches for 5-year flood			
☐	☐	☒	Minimum 18-inch diameter outlet for drop inlet			
☐	☐	☒	Maintenance access			
☐	☐	☒	Flood hazard warning signs			
Underground Detention						
☐	☐	☒	Material designed for HS-20 loading			
☐	☐	☒	Minimum 36-inch diameter pipe segments			
☐	☐	☒	Minimum 0.25% slope pipe segments			
☐	☐	☒	No permanent buildings or structures above detention facility			
☐	☐	☒	Minimum 18-inch RCB outlet pipe(s)			
☐	☐	☒	Minimum 30-inch diameter maintenance access ports			

Additional Comments:

1. GENERAL INFORMATION

A. GOVERNING BUILDING CODE: 2015 INTERNATIONAL BUILDING CODE (IBC-2015).

B. BUILDING RISK CATEGORY: THE BUILDING RISK CATEGORY ACCORDING TO IBC-2015 TABLE 1604.5 AND ASCE 7-10 TABLE 1.5-1 IS CATEGORY III.

C. ELEVATIONS: REFERENCE FINISHED FLOOR ELEVATIONS OF 100'-0" EQUALS ACTUAL EXISTING FINISH FLOOR ELEVATION OF 1249.21' FOR CLASSROOM ADDITION AND 1249.38' FOR THE OFFICE ADDITION.

D. CONTRACT DOCUMENTS:

1) THE CONTRACT DOCUMENTS CONSIST OF THE AGREEMENT BETWEEN THE OWNER AND CONTRACTOR, CONDITIONS OF THE CONTRACT, DRAWINGS, SPECIFICATIONS, ADDENDA ISSUED PRIOR TO EXECUTION OF THE CONTRACT, OTHER DOCUMENTS LISTED IN THE AGREEMENT AND MODIFICATIONS ISSUED AFTER EXECUTION OF THE CONTRACT.

2) THE GENERAL CONTRACTOR IS RESPONSIBLE FOR OBTAINING AND DISSEMINATING ALL CONTRACT DOCUMENTS AND LATEST ADDENDA TO ALL SUB-CONTRACTORS PRIOR TO DETAILING, FABRICATION OR INSTALLATION OF WORK.

3) CORRELATION OF THE CONTRACT DOCUMENTS: THE CONTRACT DOCUMENTS ARE COMPLEMENTARY, AND WHAT IS REQUIRED BY ONE SHALL BE AS BINDING AS IF REQUIRED BY ALL. IF CONFLICTING REQUIREMENTS ARE FOUND BETWEEN THE DRAWINGS, SPECIFICATIONS AND/OR THESE GENERAL NOTES, THE MORE STRINGENT AND HIGHEST COST REQUIREMENT SHALL CONTROL UNLESS DIRECTED OTHERWISE IN WRITING BY THE OWNER'S REPRESENTATIVE.

4) THE GENERAL CONTRACTOR SHALL COMPARE THE ARCHITECTURAL AND STRUCTURAL DRAWINGS FOR DISCREPANCIES BETWEEN EACH SET, AND WITHIN EACH SET OF DRAWINGS, AND REPORT DISCREPANCIES, IF ANY, TO THE OWNER'S REPRESENTATIVE PRIOR TO THE DETAILING, FABRICATION AND INSTALLATION OF AFFECTED WORK.

5) GENERAL CONTRACTOR SHALL COORDINATE SIZES AND LOCATIONS OF OPENINGS THROUGH FLOORS, ROOF, AND WALLS SHOWN ON ELECTRICAL, PLUMBING, AND FIRE SUPPRESSION SYSTEM DESIGN DOCUMENTS WITH ASSOCIATED SUBCONTRACTORS.

6) CONTRACTOR SHALL COORDINATE ALL ELEVATOR REQUIREMENTS FOR FINAL ELEVATOR EQUIPMENT PURCHASED, INCLUDING PIT DIMENSIONS, PIT DEPTH, FLOOR OPENING DIMENSIONS, ELEVATOR OVER-RUN CLEARANCE AT TOP OF SHAFT. CONTRACTOR SHALL REPORT ASSOCIATED DISCREPANCIES TO THE ARCHITECT IN WRITING PRIOR TO CONSTRUCTION OF ASSOCIATED BUILDING ELEMENTS.

7) ALTHOUGH NOT NECESSARILY SPECIFICALLY REFERENCED IN THE CONTRACT DOCUMENTS, TYPICAL DETAILS AND GENERAL NOTES APPLY TO THE ENTIRE PROJECT WHEREVER CONDITIONS SIMILAR TO THOSE DETAILED OR NOTED EXIST.

8) THE USE OF ELECTRONIC FILES OR REPRODUCTION OF CONTRACT DOCUMENTS BY ANY TRADE OR MATERIAL SUPPLIER IN LIEU OF COMPLETELY INDEPENDENT PREPARATION OF SHOP DRAWINGS SIGNIFIES THE SUPPLIER'S CERTIFICATION THAT ALL INFORMATION SHOWN IN THE SHOP DRAWINGS IS CORRECT, AND ASSIGNS THEMSELVES TO RESPONSIBILITY FOR ANY JOB EXPENSE ARISING DUE TO ANY ERRORS OCCURRING THEREIN.

E. FIELD MODIFICATIONS: CONTRACTOR OR SUBCONTRACTOR FIELD MODIFICATIONS TO THE STRUCTURE WITHOUT THE PRIOR WRITTEN CONSENT OF THE STRUCTURAL ENGINEER ARE EXPRESSLY PROHIBITED AND MAY REQUIRE SUBSEQUENT REMEDIATION DIRECTED BY THE STRUCTURAL ENGINEER AT CONTRACTOR'S EXPENSE.

2. DESIGN LOADS

A. DEAD LOAD: SELF WEIGHT OF MATERIALS, UNLESS NOTED OTHERWISE

B. ROOF DEAD LOAD:
1) BUILT-UP ROOFING SYSTEM.....................................6 PSF
2) RIGID INSULATION..2 PSF
3) METAL ROOF DECK...3 PSF
4) JOIST SELF-WEIGHT...2 PSF
5) CEILING SYSTEM..2 PSF
6) ROOF COLLATERAL (MEP, BRIDGING & MISC. FRAMING).............5 PSF
7) TOTAL..20 PSF

C. UNIFORM LIVE LOADS:
1) ROOF LIVE LOAD (REDUCIBLE).................................20 PSF

D. CONCENTRATED LIVE LOADS:
1) ROOFS (ON AN AREA 2.5 FT. X 2.5 FT.).......................300 LBS

E. WIND LOADS:
1) GOVERNING CODE:...ASCE 7-10
2) RISK CATEGORY: III
3) EXPOSURE CATEGORY:..B
4) INTERNAL PRESSURE COEFFICIENT, GCPI:....... ....+/- 0.18
5) TOPOGRAPHIC FACTOR, KZT:....................................1.0
6) DIRECTIONALITY FACTOR, KD:.................................0.85
7) ULTIMATE DESIGN WIND SPEED, Vult:.........................120 MPH

F. SNOW LOADS:
1) GOVERNING CODE:..ASCE 7-10
2) SNOW IMPORTANCE FACTOR, Is:.................................1.1
3) GROUND SNOW LOAD, Pg:....................................10 PSF
4) EXPOSURE OF ROOF: ....PARTIALLY EXPOSED
5) EXPOSURE FACTOR, Ce:..1.0
6) THERMAL FACTOR, Ct:...1.0
7) ROOF SLOPE FACTOR, Cs:......................................1.0
8) MINIMUM FLAT ROOF SNOW LOAD, I*Pg:.......................7.7 PSF
9) RAIN ON SNOW SURCHARGE LOAD:...............................5 PSF

G. RAIN LOADS:
1) GOVERNING CODE:..ASCE 7-10
2) DEPTH OF WATER ON THE UNDEFLECTED ROOF UP TO THE INLET OF THE SECONDARY DRAINAGE SYSTEM WHEN THE PRIMARY DRAINAGE SYSTEM IS BLOCKED (I.E., THE STATIC HEAD), ds...................4.0 INCHES
3) ADDITIONAL DEPTH OF WATER ON THE UNDEFLECTED ROOF ABOVE THE INLET OF THE SECONDARY DRAINAGE SYSTEM AT ITS DESIGN FLOW (I.E., THE HYDRAULIC HEAD), dh...................................2.0 INCHES

H. SEISMIC DESIGN CRITERIA:
1) GOVERNING CODE:...ASCE 7-10
2) RISK CATEGORY: III
3) SEISMIC IMPORTANCE FACTOR, Ie:.............................1.25
4) SOIL SITE CLASSIFICATION:.....................................C
5) 0.2 SEC. MAPPED SPECTRAL ACCELERATION, Ss:.................0.273
6) 1.0 SEC. MAPPED SPECTRAL ACCELERATION, S1:.................0.079
7) SITE COEFFICIENT, 0.2 SEC. PERIOD, Fa:.......................1.2
8) SITE COEFFICIENT, 1.0 SEC. PERIOD, Fv:.......................1.7
9) 0.2 SEC. DESIGN SPECTRAL ACCELERATION, Sds:................0.218
10) 1.0 SEC. DESIGN SPECTRAL ACCELERATION, Sd1:................0.089
11) SEISMIC DESIGN CATEGORY:.....................................B
12) SEISMIC PARAMETERS FOR BUILDING:
A) SEISMIC FORCE RESISTING SYSTEM: ORDINARY REINFORCED MASONRY SHEAR WALLS
B) RESPONSE MODIFICATION COEFFICIENT, R:......................2.0
C) SYSTEM OVERSTRENGTH FACTOR, O:.............................2.5
D) DEFLECTION AMPLIFICATION FACTOR, Cd:......................1.75
E) ANALYSIS PROCEDURE: EQUIVALENT LATERAL FORCE METHOD.
F) SEISMIC RESPONSE COEFFICIENT, Cs:........................0.163
G) TOTAL LATERAL BASE SHEAR, CLASSROOM V:................220 KIPS
H) TOTAL LATERAL BASE SHEAR, OFFICE V:....................55 KIPS

3. MATERIAL DESIGN VALUES

A. CONCRETE (MINIMUM ULTIMATE COMPRESSIVE STRENGTH AT 28 DAYS, NORMAL WEIGHT U.N.O.)
1) FOUNDATIONS:..3,500 PSI
2) SLAB-ON-GRADE:..4,000 PSI
3) ALL OTHER STRUCTURAL CONCRETE, U.N.O:...................4,000 PSI

B. REINFORCED CONCRETE MASONRY
1) DETERMINATION OF COMPRESSIVE STRENGTH:........UNIT STRENGTH METHOD
2) DESIGN COMPRESSIVE STRENGTH OF CONCRETE MASONRY, f'm:....2,000 PSI
3) NET AREA COMPRESSIVE STRENGTH OF CONCRETE MASONRY UNITS (ASTM C90)...2,000 PSI
4) MORTAR (ASTM C270, PROPORTION SPECIFICATION, TYPE S).....1,800 PSI
5) GROUT (ASTM C476, PROPORTION SPECIFICATION).............2,000 PSI

C. CONCRETE AND MASONRY REINFORCEMENT (MINIMUM YIELD STRENGTH)
1) ALL PLAIN AND DEFORMED BARS (ASTM A615, GRADE 60)......FY = 60 KSI
2) WELDABLE REINFORCING BARS (ASTM A706) ....FY = 60 KSI

D. STRUCTURAL STEEL (MINIMUM YIELD STRENGTH)
1) ALL WIDE FLANGE SHAPES (ASTM A992)...................FY = 50 KSI
2) SQUARE AND RECTANGULAR HSS (ASTM A500, GRADE C)........FY = 50 KSI
3) ANCHOR RODS (ASTM F1554, GRADE 55, SUPPLEMENTARY REQUIREMENT S1, WELDABLE)...FY = 55 KSI
4) DEFORMED BAR ANCHORS (AWS D1.1 TYPE C, ASTM A1064).....FY = 70 KSI
5) HEADED STUD ANCHORS (AWS D1.1 TYPE B, ASTM A29, GRADES 1010 THROUGH 1020)...FY = 51 KSI
6) ALL OTHER SHAPES AND PLATES UNLESS NOTED (ASTM A36)....FY = 36 KSI

E. COLD FORMED STEEL (MINIMUM YIELD STRENGTH)
1) ROOF DECK (ASTM A653, SS GRADE 33, G-60 GALVANIZED)....FY = 33 KSI
2) COLD FORMED METAL STUDS, 43 MIL AND LIGHTER (ASTM A1003/A, GRADE ST33H, G-60 GALVANIZED)................................FY = 33 KSI
3) COLD FORMED METAL STUDS, 54 MIL AND HEAVIER (ASTM A1003/A, GRADE ST50H, G-60 GALVANIZED)...............................FY = 50 KSI
4) COLD FORMED METAL CLIPS (ASTM A653, SS GRADE 50,G-90 GALVANIZED)...FY = 50 KSI

4. CONSTRUCTION LOADS AND STABILITY

A. THE CONTRACTOR SHALL BE RESPONSIBLE FOR VERIFYING ALL TEMPORARY CONSTRUCTION LOADS CAN BE SAFELY SUPPORTED BY THE STRUCTURE DURING CONSTRUCTION.

B. THE STRUCTURAL FRAMING SYSTEM AND FOUNDATIONS HAVE BEEN DESIGNED AS A COMPLETE STRUCTURAL SYSTEM FOR SUPPORT OF THE LOADS INDICATED IN THE CONSTRUCTION DOCUMENTS. THE STRUCTURE HAS NOT BEEN DESIGNED OR CHECKED FOR TEMPORARY CONSTRUCTION LOADS NOR HAS IT BEEN DESIGNED OR CHECKED FOR ADEQUACY OR STABILITY AS A PARTIALLY ERECTED STRUCTURE.

C. THE CONTRACTOR SHALL BE RESPONSIBLE FOR CONFIRMING THE ABILITY OF THE PARTIALLY COMPLETED OR FULLY COMPLETED STRUCTURE TO RESIST ALL CONSTRUCTION LOADS INCLUDING BUT ARE NOT NECESSARILY LIMITED TO MATERIAL STAGING, PERSONNEL, AND EQUIPMENT.

D. THE CONTRACTOR SHALL PROVIDE TEMPORARY SHORES, GUYS, BRACES, AND OTHER SUPPORTS DURING CONSTRUCTION TO KEEP STRUCTURAL FRAMING COMPONENTS SECURE, PLUMB, AND IN ALIGNMENT AGAINST TEMPORARY CONSTRUCTION LOADS AND LOADS EQUAL IN INTENSITY TO DESIGN LOADS. THE TEMPORARY SUPPORTS SHALL BE SUFFICIENT TO SECURE THE PARTIALLY ERECTED STRUCTURE OR ANY PORTION THEREOF AGAINST LOADS THAT ARE LIKELY TO BE ENCOUNTERED DURING CONSTRUCTION, INCLUDING THOSE DUE TO WIND AND THOSE THAT RESULT FROM CONSTRUCTION OPERATIONS.

E. THE CONTRACTOR SHALL NOT REMOVE TEMPORARY SUPPORTS UNTIL THE INSTALLATION OF ALL STRUCTURAL ELEMENTS IS COMPLETE AND HAS BEEN ACCEPTED AS COMPLETE BY THE ENGINEER. FOR THE PURPOSES OF THIS PARAGRAPH, "ALL STRUCTURAL ELEMENTS" INCLUDES, BUT IS NOT NECESSARILY LIMITED TO, THE FOLLOWING STRUCTURAL ELEMENTS:
1) FOUNDATIONS
2) LOAD-BEARING MASONRY WALLS
3) MASONRY SHEAR WALLS
4) STRUCTURAL STEEL FRAMING WITH COMPLETED STEEL CONNECTIONS, INCLUDING PERMANENT VERTICAL AND/OR HORIZONTAL BRACING
5) STEEL JOISTS INCLUDING JOIST BRIDGING
6) ROOF DECK

5. EXISTING CONSTRUCTION

A. ALL VERTICAL AND HORIZONTAL DIMENSIONS, FINISHED FLOOR AND ROOF ELEVATIONS, PLUMBNESS, AND DETAILS FOR THE EXISTING STRUCTURE SHALL BE VERIFIED IN THE FIELD PRIOR TO PROCEEDING WITH ANY DEMOLITION OR INSTALLATION OF NEW WORK.

B. PRIOR TO DEMOLITION OR INSTALLATION OF NEW WORK, THE CONTRACTOR SHALL MAKE WRITTEN DOCUMENTATION IF UNFORESEEN CONDITIONS OCCUR IN THE EXISTING CONSTRUCTION. THESE UNFORESEEN CONDITIONS SHALL BE SUBMITTED TO THE OWNER'S REPRESENTATIVE FOR REVIEW AND A WRITTEN RESPONSE BEFORE PROCEEDING WITH THE WORK.

C. THE CONTRACTOR SHALL PROVIDE AND INSTALL ALL SHORING, PROPS, AND GUYS REQUIRED FOR THE TEMPORARY SUPPORT OF THE EXISTING STRUCTURE, UTILITIES, ETC. AS MAY BE NECESSARY TO SAFELY COMPLETE DEMOLITION OR NEW WORK.

D. THE CONTRACTOR SHALL BE RESPONSIBLE FOR LOCATING EXISTING UTILITIES, BOTH CHARTED AND UNCHARTED BEFORE COMMENCING WITH ANY EXCAVATION OR DEMOLITION WORK. DEPTH OF CONCRETE SAW SHALL BE SET SO AS NOT TO CUT ANY LOCAL EMBEDDED OR UNDER-FLOOR PIPING OR WIRING WHICH IS TO REMAIN.

E. ALL DRILLING, CUTTING, DEMOLITION OR OTHER MODIFICATIONS TO EXISTING CONSTRUCTION SHALL BE PERFORMED IN A MANNER THAT WILL NOT REDUCE THE STABILITY OR STRUCTURAL INTEGRITY OF THE EXISTING CONSTRUCTION. WHEN SAW CUTTING, SPECIAL CARE SHALL BE TAKEN TO NOT OVER CUT INTO AN EXISTING AREA OF STRUCTURE THAT WILL REMAIN.

F. CORING FOR PIPING OR CONDUIT THROUGH EXISTING STRUCTURAL MEMBERS IS NOT ALLOWED UNLESS SPECIFICALLY SHOWN IN THE CONTRACT DOCUMENTS OR SPECIFICALLY ALLOWED BY THE STRUCTURAL ENGINEER IN WRITING.

G. DAMAGE TO PORTIONS OF THE EXISTING STRUCTURE OR OTHER EXISTING BUILDING COMPONENTS CAUSED BY DEMOLITION OPERATIONS SHALL BE REPAIRED BY THE CONTRACTOR AT THE CONTRACTOR'S EXPENSE AND TO A LEVEL ACCEPTABLE TO THE OWNER'S REPRESENTATIVE.

H. THE PROJECT AREA SHALL BE MAINTAINED AS CLEAN AS POSSIBLE WITH DUST BEING LIMITED AS MUCH AS PRACTICAL.

6. DEFERRED SUBMITTALS

A. DEFERRED DESIGN SUBMITTALS ARE TO BE SUBMITTED TO THE OWNER'S REPRESENTATIVE AND SHALL INCLUDE BOTH SHOP DRAWINGS AND SIGNED AND SEALED CALCULATIONS PERFORMED BY AN ENGINEER LICENSED IN THE STATE WHERE THE PROJECT IS LOCATED AND EXPERIENCED IN THE DESIGN OF THE SPECIFIC BUILDING ELEMENT BEING SUBMITTED. THE FOLLOWING ITEMS ARE CONSIDERED DEFERRED SUBMITTALS:
1) STEEL JOISTS
2) ROOF MOUNTED EQUIPMENT AND ASSOCIATED ANCHORAGES
3) ANALYSIS OF CONCRETE SLABS FOR SUPPORT OF PROPOSED LIFT EQUIPMENT (FOR KFC FILE ONLY, WILL NOT BE REVIEWED AND RETURNED)

B. DOCUMENTS FOR DEFERRED SUBMITTAL ITEMS SHALL BE SUBMITTED TO THE OWNER'S REPRESENTATIVE WHO SHALL REVIEW THEM AND FORWARD THEM TO THE BUILDING OFFICIAL WITH A NOTATION INDICATING THAT THE DEFERRED SUBMITTAL DOCUMENTS HAVE BEEN REVIEWED AND FOUND TO BE IN GENERAL CONFORMANCE TO THE DESIGN OF THE BUILDING.

C. THE DEFERRED SUBMITTAL ITEMS SHALL NOT BE INSTALLED UNTIL THE DEFERRED SUBMITTAL DOCUMENTS HAVE BEEN APPROVED BY BOTH THE OWNER'S REPRESENTATIVE AND THE BUILDING OFFICIAL.

D. ADDITIONAL ITEMS IMPACTING STRUCTURAL DESIGN, INCLUDING BUT NOT LIMITED TO, ELEVATORS AND MECHANICAL EQUIPMENT WEIGHTS, SHALL BE SUBMITTED TO OWNER'S REPRESENTATIVE FOR EVALUATION

7. FOUNDATION NOTES

A. GEOTECHNICAL REPORT: A GEOTECHNICAL ENGINEERING SERVICES REPORT FOR THE HIGHLAND WEST JUNIOR HIGH ADDITIONS LOCATED IN MOORE, OKLAHOMA WAS PERFORMED BY PROFESSIONAL SERVICE INDUSTRIES, INC. (PSI), DATED JULY 22, 2020 (PSI REPORT NO. 05462142-4)

B. SITE SUB-GRADE PREPARATION:

1) STRIPPING: SITE PREPARATION FOR THE BUILDING PAD SHALL INCLUDE REMOVING ANY SOFT OR UNSUITABLE MATERIALS ENCOUNTERED DURING CONSTRUCTION. VEGETATION ROOTS, PAVEMENTS, UTILITIES, GRAVEL, EXISTING FOOTINGS, EXISTING SLABS AND ANY TOPSOIL WILL REQUIRE REMOVAL DURING INITIAL SITE STRIPPING. REMOVED MATERIAL CAN EITHER BE WASTED OR STOCKPILED IN A NON-LOAD BEARING AREA FOR LATER USE. REMOVAL DEPTHS SHALL BE DETERMINED BY A GEOTECHNICAL ENGINEER.

2) PROOF-ROLLING: AFTER MAKING ANY REQUIRED CUTS, THE CONSTRUCTION AREA SHALL BE PROOF-ROLLED (UNDER OBSERVATION OF A GEOTECHNICAL ENGINEER) WITH A TANDEM AXLE DUMP TRUCK WEIGHING AT LEAST 9 TONS/AXLE TO LOCATE ANY SOFT OR UNSTABLE AREAS. THE PROOF-ROLLING SHALL BE PERFORMED WITH OVERLAPPING PASSES IN MUTUALLY PERPENDICULAR DIRECTIONS. SOILS IN AREAS WHERE RUTTING (DEFLECTIONS GREATER THAN 1 INCH) OR PUMPING OCCURS DURING PROOF-ROLLING SHALL BE UNDERCUT AND RECOMPACTED IN PLACE OR REPLACED WITH PROPERLY COMPACTED ENGINEERED FILL. THE RECOMPACTED SOIL OR STRUCTURAL FILL SHALL BE MOISTURE CONDITIONED DURING PLACEMENT. THE PROOF-ROLLING AND UNDERCUTTING ACTIVITES SHALL BE WITNESSED BY A REPRESENTATIVE OF THE GEOTECH ENGINEER AND SHALL BE PERFORMED DURING A PERIOD OF DRY WEATHER.

3) SCARIFICATION: AFTER STRIPPING, EXCAVATING AND PROOF-ROLLING, THE EXPOSED SOILS SHALL BE SCARIFIED TO A DEPTH OF 8 INCHES AND THEN PROCESSED AT A MOISTURE CONTENT AT OR ABOVE ITS OPTIMUM VALUE AS DETERMINED BY THE STANDARD PROCTOR TEST. THE SUBGRADE SOIL SHALL BE RECOMPACTED TO AT LEAST 95 PERCENT OF ITS MAXIMUM DRY DENSITY AS DETERMINED BY THE STANDARD PROCTOR TEST METHOD (ASTM D-698).

4) ACCEPTABLE FILL: STRUCTURAL FILL MATERIALS SHALL BE FREE OF ORGANIC OR OTHER DELETERIOUS MATTER. HAVE A MAXIMUM PARTICLE SIZE OF 3 INCHES, HAVE A LIQUID LIMIT NOT MORE THAN 35, A PLASTICITY INDEX IN THE RANGE OF 5 TO 18 AND FINE MATERIAL PASSING THE NO. 200 U.S. STANDARD SEIVE NOT LESS THAN 60%.

5) FILL PLACEMENT: FILL SHALL BE PLACED IN MAXIMUM LIFTS OF 8 INCHES OF LOOSE MATERIAL AND SHALL BE COMPACTED WITHIN THE RANGE OF 2 PERCENT POINTS BELOW AND 3 PERCENTAGE POINTS ABOVE THE OPTIMUM MOISTURE CONTENT.EACH LIFT OF COMPACTED ENGINEERED FILL SHALL BE TESTED BY A REPRESENTATIVE OF THE GEOTECHNICAL ENGINEER PRIOR TO PLACEMENT OF SUBSEQUENT LIFTS. THE EDGES OF COMPACTED FILL SHALL EXTEND 5 FEET LATERALLY BEYOND THE BUILDING FOOTPRINT PRIOR TO SLOPING ON AS FLAT A GADIENT AS PRACTICAL. STRUCTURAL FILL SHALL BE COMPACTED TO AT LEAST 95 PERCENT OF STANDARD PROCTOR MAXIMUM DRY DENSITY AS DETERMINED BY ASTM D-698.

6) DEPTH OF FILL: FOOTINGS SHALL BE SUPPORTED ON NATIVE SOILS OR STRUCTURAL FILL. GROUND FLOOR SLABS SHALL BE GRADE SUPPORTED ON 2'-0" OF COMPACTED STRUCTURAL FILL PLACED AS DESCRIBED ABOVE.

7) FILL PLACEMENT TESTING: EACH LIFT OF COMPACTED FILL SHALL BE TESTED BY A GEOTECHNICAL ENGINEER PRIOR TO PLACEMENT OF SUBSEQUENT LIFTS. FIELD DENSITY TESTS SHALL BE TAKEN AT A MINIMUM OF ONE PER EVERY 2500 SF, BUT AT LEAST TWO SETS OF DENSITY TESTS SHALL BE TAKEN FOR EACH LIFT.

8) SITE DRAINAGE: GRADING OF THE SITE AROUND THE STRUCTURE'S PADS SHALL BE ACCOMPLISHED TO ENABLE POSITIVE DRAINAGE AWAY FROM THE PADS BY PROVIDING AN ADEQUATE GRADIENT. THE SURFACE GRADIENT PROVIDED WILL BE DEPENDENT ON THE LANDSCAPING TYPE OF VEGETATION. WATER INFILTRATION AND SEEPAGE INTO THE FOUNDATION SHALL BE REDUCED AS MUCH AS POSSIBLE. IF IT IS POSSIBLE FOR WATER TO COLLECT BENEATH THE FOUNDATION AND FOUNDATION AREAS, IT WILL BE NECESSARY TO USE INTERCEPTOR DRAINS TO REMOVE THE COLLECTED WATER.

9) MAINTENANCE OF SOIL MOISTURE: SOIL MOISTURE SHALL BE MAINTAINED UP UNTIL CONCRETE PLACEMENT TO PREVENT SHRINKAGE AND SUBSEQUENT POST-CONSTRUCTION SWELL OF SUBGRADE SOILS.

C. SHALLOW FOUNDATIONS:

1) FOOTING DESIGN PARAMETERS: THE PROPOSED BUILDING SHALL BE SUPPORTED ON CONVENTIONAL SHALLOW SPREAD FOOTINGS BASED ON THE FOLLOWING DESIGN PARAMETERS:
A) BEARING MATERIAL: NATIVE SOIL OR PROPERLY COMPACTED ENGINEERED FILL AS OUTLINED ABOVE
B) ALLOWABLE BEARING PRESSURE FOR SPOT FOOTINGS: 3,500 PSF
C) ALLOWABLE BEARING PRESSURE FOR CONTINUOUS FOOTINGS: 2,500 PSF

2) OBSERVATION OF BEARING CONDITIONS: A REPRESENTATIVE OF THE GEOTECHNICAL ENGINEER SHALL OBSERVE THE FOUNDATION EXCAVATIONS PRIOR TO STEEL OR CONCRETE PLACEMENT TO DETERMINE IF THE FOUNDATION MATERIALS ARE CAPABLE OF SUPPORTING THE DESIGN LOADS AND ARE CONSISTENT WITH THE MATERIALS DISCUSSED ABOVE.

3) IMPROVEMENT OF BEARING CONDITIONS: SOFT OR LOOSE SOIL ZONES ENCOUNTERED AT THE BOTTOM OF THE FOOTING EXCAVATIONS SHALL BE REMOVED TO THE LEVEL OF STIFF OR DENSE SOIL AS DIRECTED BY THE GEOTECHNICAL ENGINEER. CAVITIES FORMED AS A RESULT OF EXCAVATION OF SOFT OR LOOSE SOIL ZONES SHALL BE BACKFILLED WITH ENGINEERED FILL, LEAN CONCRETE OR FLOWABLE FILL, AS DETERMINED BY THE GEOTECHNICAL ENGINEER. CARE SHALL BE TAKEN TO PREVENT WETTING OR DRYING OF THE BEARING MATERIALS DURING CONSTRUCTION. ANY EXTREMELY WET OR DRY MATERIAL, OR ANY LOOSE OR DISTURBED MATERIAL IN THE BOTTOM OF THE FOOTING EXCAVATIONS SHALL BE REMOVED PRIOR TO PLACING CONCRETE.

4) ANTICIPATED SETTLEMENT: IT IS ESTIMATED THAT FOUNDATIONS CONSTRUCTED IN ACCORDANCE WITH THE ABOVE RECOMMENDATIONS WILL EXPERIENCE TOTAL SETTLEMENTS GENERALLY LESS THAN 1-INCH WITH DIFFERENTIAL SETTLEMENTS GENERALLY LESS THAN ¾ INCHES WITHIN THE BUILDING AREA.

5) TRENCHED FOOTINGS: EARTH-FORMED TRENCHED FOOTINGS ARE PERMITTED, EXCEPT WHERE BRICK LEDGES OR EXPOSED SURFACES REQUIRE FORMING AND/OR WHERE SOIL SIDE WALLS SLOUGH INTO THE TRENCH. IN ORDER TO ACHIEVE 3" MINIMUM CONCRETE COVER OVER STEEL REINFORCING ON SIDEWALLS, EARTH FORMED TRENCHES SHALL BE A MINIMUM OF 2" WIDER THAN THE FORMED DIMENSIONS SHOWN IN ALL SECTIONS AND DETAILS.

6) PIPE PENETRATIONS: ALL HORIZONTAL PIPE OR SIMILAR PENETRATIONS OR SLEEVES THROUGH FOOTINGS SHALL PREFERABLY OCCUR WITHIN THE MIDDLE 1/3 OF THE FOOTING DEPTH AND SHALL HAVE A MAXIMUM OPENING DIAMETER OF ONE-FOURTH THE FOOTING DEPTH. AT PENETRATIONS, PROVIDE (4) #5 DIAGONAL BARS AT EACH FOOTING FACE (3" CLEAR BETWEEN BAR AND PENETRATION AND 3" CLEAR FROM FOOTING BEARING). IF PENETRATION MUST OCCUR NEAR THE BOTTOM OF FOOTING, REFER TYPICAL DETAILS FOR STANDARD DETAIL TO TRANSITION & THICKEN FOOTING TO ACCOMMODATE PENETRATION.

D. SLAB-ON-GRADE CONSTRUCTION

1) SLAB THICKNESS AND REINFORCING: SLABS-ON-GRADE SHALL BE 4" THICK CONCRETE REINFORCED WITH #3 BARS AT 15" ON CENTER EACH WAY. REINFORCING BARS SHALL BE PLACED 1½" CLEAR FROM TOP OF SLAB USING CHAIRS OR SLAB BOLSTERS COMPLYING WITH CRSI'S "MANUAL OF STANDARD PRACTICE".

2) SLAB SUBGRADE: THE FLOOR SLAB SHALL BE GRADE-SUPPORTED AS OUTLINED IN THE SITE SUB-GRADE PREPARATION NOTES SHOWN ABOVE.

3) CONSTRUCTION MONITORING: CONSTRUCTION ACTIVITY MAY CAUSE DAMAGE AND DETERIORATION TO THE PREPARED SUBGRADE. A FIELD REPRESENTATIVE OF THE GEOTECHNICAL ENGINEER SHALL OBSERVE THE FINAL SUBGRADE PRIOR TO PLACEMENT OF THE SLAB ON GRADE, PERFORM FURTHER TESTING AS NECESSARY, AND DETERMINE IF ANY REMEDIAL MEASURES ARE NECESSARY PRIOR TO SLAB PLACEMENT.

4) AGGREGATE BASE COURSE: A 4-INCH THICK, FREE-DRAINING AGGREGATE BASE COURSE SHALL BE PLACED BENEATH THE FLOOR SLAB TO ENHANCE DRAINAGE AND PROVIDE INCREASED SUBGRADE STRENGTH. AT THE TIME OF THE SLAB PLACEMENT, THE GRANULAR BASE SHALL BE MOIST, BUT FREE OF ANY STANDING OR SELF-DRAINING WATER. THE AGGREGATE BASE COURSE MATERIAL SHALL MEET THE OKLAHOMA DEPARTMENT OF TRANSPORTATIONS STANDARD SPECIFICATION 701.3 TYPE "A" CRITERIA.

5) VAPOR RETARDER: A 15 MIL VAPOR RETARDER SHALL BE PLACED IMMEDIATELY BELOW THE CONCRETE SLAB. VAPOR RETARDER SHALL BE SEALED AT ALL LAPS AND SEALED TO PREVIOUSLY PLACED CONCRETE AS RECOMMENDED BY VAPOR RETARDER MANUFACTURER. BEFORE PLACING CONCRETE, PATCH AND SEAL ANY RIPS, TEARS OR HOLES IN VAPOR RETARDER INCURRED DURING CONSTRUCTION.

6) MOIST CURING OF SLAB: SLABS-ON-GRADE SHALL BE WATER CURED FOR A MINIMUM OF 7 DAYS BY PONDING, SPRAYING, SPRINKLING OR BY USE OF SATURATED COVERINGS. CURING COMPOUNDS ARE EXPRESSLY PROHIBITED.

7) ISOLATION JOINTS: PROVIDE SLAB ISOLATION AROUND COLUMNS PENETRATING THE SLAB-ON-GRADE. PROVIDE 1/2 INCH PREMOLDED EXPANSION JOINT MATERIAL AROUND PERIMETER OF ISOLATION JOINTS. REFER TO TYPICAL DETAILS AND ADDITIONAL INFORMATION.

8) SLAB JOINTS: SLAB JOINTS SHALL BE PROVIDED AS SHOWN ON THE PLANS AND TYPICAL DETAILS AND AS DESCRIBED FURTHER IN THE SLAB-ON-GRADE SCHEDULE. THE FOLLOWING JOINT TYPES ARE SHOWN ON THE DRAWINGS:
A) CJ = CONSTRUCTION JOINT
B) SJ = SAWED CONTRACTION JOINT
C) EJ = EXPANSION JOINT

E. FOUNDATION MISCELLANEOUS

1) GROUNDWATER CONDITIONS: GROUNDWATER WAS ENCOUNTERED IN SOME OF THE BORINGS AT THE TIME OF DRILLING. HOWEVER, IT IS POSSIBLE THAT TRANSIENT OVER-SATURATED GROUND CONDITIONS COULD DEVELOP AT SHALLOWER DEPTHS AT A LATER TIME DUE TO PERIODS OF HEAVY PRECIPITATION, LANDSCAPE WATERING, LEAKING WATER LINES, OR OTHER UNFORESEEN CAUSES. THE CONTRACTOR SHALL DETERMINE THE ACTUAL GROUNDWATER LEVELS AT TIME OF CONSTRUCTION. IF GROUNDWATER ISSUES ARE ENCOUNTERED DURING CONSTRUCTION, THE GEOTECHNICAL ENGINEER SHALL BE CONTACTED AND REQUESTED TO ASSESS THE POSSIBLE NEED FOR REMEDIAL MEASURES.

2) DRAINAGE CONSIDERATIONS DURING CONSTRUCTION: DUE TO ADVERSE EFFECT ON STRUCTURES, WATER SHALL NOT BE ALLOWED TO COLLECT IN THE FOUNDATION EXCAVATION OR ON PREPARED SUBGRADE OF THE CONSTRUCTION AREA EITHER DURING OR AFTER CONSTRUCTION. UNDERCUT OR EXCAVATED AREAS SHALL BE SLOPED TOWARD ONE CORNER TO FACILITATE REMOVAL OF ANY COLLECTED RAINWATER, OR POSITIVE RUNOFF SHALL BE PROVIDED. THE CONTRACTOR SHALL EXERCISE CARE IN CREATING DRAINAGE PATHS FOR WATER DURING THE CONSTRUCTION PHASE OF THE PROJECT. TO REDUCE INFILTRATION OF SURFACE WATER AROUND THE PERIMETER OF THE BUILDING AND BENEATH THE FLOOR SLABS, POSITIVE DRAINAGE SHALL BE PROVIDED DURING ALL PHASES OF CONSTRUCTION.

3) FINAL SITE GRADING: PER SECTION 1804.4 OF IBC-2015, THE GROUND IMMEDIATELY ADJACENT TO THE FOUNDATION SHALL BE SLOPED AWAY FROM THE BUILDING AT A SLOPE OF NOT LESS THAN ONE UNIT VERTICAL IN 20 UNITS HORIZONTAL (5-PERCENT SLOPE) FOR A MINIMUM DISTANCE OF 10 FEET PERPENDICULAR TO THE FACE OF THE WALL. IF PHYSICAL OBSTRUCTIONS OR LOT LINES PROHIBIT 10 FEET OF HORIZONTAL DISTANCE, A 5-PERECNT SLOPE SHALL BE PROVIDED TO AN APPROVED ALTERNATIVE METHOD OF DIVERTING WATER AWAY FROM THE FOUNDATION. SWALES USED FOR THIS PURPOSE SHALL BE SLOPED A MINIMUM OF 2-PERECNT WHERE LOCATED WITHIN 10 FEET OF THE BUILDING FOUNDATION. IMPERVIOUS SURFACES WITHIN 10 FEET OF THE BUILDING SHALL BE SLOPED A MINIMUM OF 2-PERCENT AWAY FROM THE BUILDING.

4) EXCAVATION AND TEMPORARY SLOPES: THE CONTRACTOR, DESIGNATED AS "RESPONSIBLE PERSON" IN OSHA CONSTRUCTION STANDARDS FOR EXCAVATIONS, 29 CFR PART 1926, IS SOLELY RESPONSIBLE FOR PLANNING AND IMPLEMENTING ALL SAFETY PROCEDURES DURING CONSTRUCTION. ALL EXCAVATION HEIGHT, SLOPE, AND DEPTH MUST ADHERE TO ALL SPECIFICATIONS OUTLINED IN LOCAL, STATE, AND FEDERAL SAFETY REGULATIONS. THE STRUCTURAL ENGINEER DOES NOT ASSUME ANY RESPONSIBILITY FOR CONSTRUCTION SITE SAFETY OR ANY PARTY'S, INCLUDING THE CONTRACTOR'S, COMPLIANCE WITH THE APPLICABLE LOCAL, STATE, AND FEDERAL SAFETY REGULATIONS OR ANY OTHER APPLICABLE REGULATIONS.

5) TRENCH BACKFILL: ALL REQUIRED TRENCH BACKFILL SHALL BE ACCEPTABLE FILL MATERIAL AS DEFINED ABOVE AND SHALL BE MECHANICALLY COMPACTED IN LAYERS TO AT LEAST 95% OF THE STANDARD PROCTOR MAXIMUM DRY DENSITY AS DETERMINED BY ASTM D 698. SOME SETTLEMENT OF THE BACKFILL MAY BE EXPECTED AND ANY UTILITIES WITHIN THE TRENCHES SHALL BE CONSTRUCTED TO ALLOW THESE DIFFERENTIAL MOVEMENTS. REFER TO PROJECT SPECIFICATIONS FOR ADDITIONAL REQUIREMENTS.

6) CONSTRUCTION MONITORING: A GEOTECHNICAL ENGINEER SHALL BE RETAINED TO PROVIDE OBSERVATIONS AND TESTING OF SOILS EXPOSED DURING PROJECT CONSTRUCTION IN ORDER TO VERIFY THAT SOIL CONDITIONS ARE AS ANTICIPATED. CONSTRUCTION ACTIVITIES PERTAINING TO EARTHWORK AND OTHER RELATED ACTIVITIES SHALL ALSO BE OBSERVED BY THE GEOTECHNICAL ENGINEER AS OUTLINED ABOVE.

8. CONCRETE CONSTRUCTION NOTES

A. DESIGN CRITERIA: THE DESIGN OF CONCRETE IS GOVERNED BY "BUILDING CODE REQUIREMENTS FOR STRUCTURAL CONCRETE (ACI 318-14) AND COMMENTARY (ACI 318R-14)."

B. CONCRETE CONSTRUCTION CRITERIA: ALL CONCRETE CONSTRUCTION SHALL COMPLY WITH THE PROVISIONS OF "SPECIFICATIONS FOR STRUCTURAL CONCRETE (ACI 301-16)."

C. TOLERANCES: TOLERANCES FOR CONCRETE CONSTRUCTION SHALL BE IN ACCORDANCE WITH "SPECIFICATION FOR TOLERANCES FOR CONCRETE CONSTRUCTION AND MATERIALS (ACI 117-10) AND COMMENTARY (ACI 117R-10)."

AGP
the Abla Griffin Partnership L.L.C.
201 N. BROADWAY
SUITE 210
MOORE, OK. 73160
405.735.3477
AGP@theAGP.net
www.theAGP.net

CEDAR CREEK
CIVIL

KFC ENGINEERING
STRUCTURAL

SALAS O'BRIEN
MECHANICAL / ELECTRICAL

PROFESSIONAL STRUCTURAL ENGINEER
BRANDON W. BIRCH
26145
OKLAHOMA

CJC
drawn by

BWB
checked by

JULY 2023
date

revisions

MOORE PUBLIC SCHOOLS
BOARD OF EDUCATION
MOORE, OKLAHOMA

MOORE Public Schools
LEARNING FOR LIFE

CLASSROOM ADDITION
HIGHLAND WEST
JUNIOR HIGH SCHOOL

sheet no:

S100

KFC engineering
Kirkpatrick Forest Curtis PC
Structural Engineering
OK CA #3888, EXP. 06/30/25
525 Central Park Drive, Suite 202
Oklahoma City, OK 73105
405.528.4596 | kfcengr.com

OWNERSHIP USE OF DOCUMENTS:

AGP EXPRESSLY RESERVES ITS COPYRIGHT AND OTHER PROPERTY RIGHTS OF ALL PLANS AND DRAWINGS DESIGNED AND/OR PRODUCED. PLANS AND DRAWINGS ARE NOT TO BE REPRODUCED IN ANY FORM OR MANNER WITHOUT THE EXPRESSED WRITTEN CONSENT OF AGP.

D. CONCRETE MIXTURES:

1) CEMENTITIOUS MATERIALS
A) PORTLAND CEMENT: ASTM C150 TYPE I OR II UNLESS SPECIFICALLY NOTED OTHERWISE.
B) FLY ASH: ASTM C618 CLASS C OR F. THE MAXIMUM PERCENTAGE OF FLY ASH SHALL NOT EXCEED 25 PERCENT OF THE TOTAL CEMENTITIOUS MATERIAL.

2) ALL CONCRETE MIXES SHALL BE COMPRISED OF NORMAL WEIGHT AGGREGATES CONFORMING TO ASTM C33, EXCEPT WHERE SPECIFICALLY INDICATED AS LIGHTWEIGHT, IN WHICH CASE AGGREGATES SHALL CONFORM TO ASTM C330.

3) MIXING WATER SHALL CONFORM TO ASTM C1062. MIXING WATER, INCLUDING THAT PORTION OF MIXING WATER CONTRIBUTED IN THE FORM OF FREE MOISTURE ON AGGREGATES, SHALL NOT CONTAIN DELETERIOUS AMOUNTS OF CHLORIDE IONS.

4) ADMIXTURES, IF USED, SHALL CONFORM TO THE FOLLOWING:
A) WATER REDUCTION AND SETTING TIME MODIFICATION: ASTM C494.
B) PRODUCING FLOWING CONCRETE: ASTM C1017.
C) AIR ENTRAINMENT: ASTM C260.
D) INHIBITING CHLORIDE INDUCED CORROSION: ASTM C1582.
E) MOISTURE VAPOR REDUCING ADMIXTURE, MVRA: ASTM C494 & ASTM D5084.

5) MIX DESIGNS SHALL BE PROPORTIONED BASED ON THE FOLLOWING MIX CHARACTERISTICS;

A) FOUNDATIONS
1) FREEZING AND THAWING EXPOSURE CATEGORY (F): CLASS F1
2) SULFATE EXPOSURE CATEGORY (S): CLASS S0
3) WATER EXPOSURE CATEGORY (W): CLASS W0
4) CORROSION PROTECTION CATEGORY (C): CLASS C1
5) 28-DAY COMPRESSIVE STRENGTH: 3,500 PSI
6) MAXIMUM WATER/CEMENT RATIO: 0.55
7) MAXIMUM AGGREGATE SIZE: 1 1/2 INCHES
8) TARGET AIR CONTENT: 4.5 PERCENT PLUS OR MINUS 1.5 PERCENT
9) MAXIMUM WATER-SOLUBLE CHLORIDE ION CONTENT IN CONCRETE, PERCENT BY WEIGHT OF CEMENT: 0.30

B) SLABS-ON-GRADE
1) FREEZING AND THAWING EXPOSURE CATEGORY (F): CLASS F0
2) SULFATE EXPOSURE CATEGORY (S): CLASS S0
3) WATER EXPOSURE CATEGORY (W): CLASS W0
4) CORROSION PROTECTION CATEGORY (C): CLASS C0
5) 28-DAY COMPRESSIVE STRENGTH: 4,000 PSI
6) MAXIMUM WATER/CEMENT RATIO: 0.45
7) MAXIMUM AGGREGATE SIZE: 1 1/2-INCHES
8) TARGET AIR CONTENT: DO NOT ALLOW AIR CONTENT OF TROWEL-FINISHED FLOORS TO EXCEED 3 PERCENT
9) MAXIMUM WATER-SOLUBLE CHLORIDE ION CONTENT IN CONCRETE, PERCENT BY WEIGHT OF CEMENT: 1.00
10) MVRA ADMIXTURES SHALL BE APPLIED TO ALL SLABS-ON-GRADE CONCRETE MIXES.

6) CONCRETE MIX PROPORTIONS SHALL BE ESTABLISHED IN ACCORDANCE WITH ARTICLE 4.2.3 OF "SPECIFICATIONS FOR STRUCTURAL CONCRETE (ACI 301)." SO THAT THE CONCRETE SATISFIES THE FOLLOWING THREE REQUIREMENTS:
A) THE CONCRETE CAN BE PLACED READILY WITHOUT SEGREGATION INTO FORMS AND AROUND REINFORCEMENT UNDER ANTICIPATED PLACEMENT CONDITIONS. THE CONCRETE PRODUCER SHALL DETERMINE WHETHER ADMIXTURES ARE NECESSARY FOR WATER REDUCTION, SET TIME, OR SLUMP REQUIREMENTS.
B) THE CONCRETE SHALL MEET REQUIREMENTS FOR THE ASSIGNED EXPOSURE CLASSES OUTLINED HEREIN.
C) THE CONCRETE SHALL CONFORM TO STRENGTH TEST REQUIREMENTS FOR STANDARD-CURED SPECIMENS.

7) DOCUMENTATION OF CONCRETE MIXTURE CHARACTERISTICS SHALL BE SUBMITTED FOR REVIEW BEFORE THE MIXTURE IS USED. EVIDENCE OF THE ABILITY OF THE PROPOSED MIXTURE TO COMPLY WITH THE CONCRETE MIXTURE REQUIREMENTS IN THE CONSTRUCTION DOCUMENTS SHALL BE INCLUDED IN THE SUBMITTAL. THE EVIDENCE SHALL BE BASED ON FIELD TEST RECORDS OR LABORATORY TRIAL BATCHES.

E. CONCRETE REINFORCING:

1) ALL DETAILING, FABRICATION, AND PLACING OF REINFORCING STEEL, UNLESS OTHERWISE NOTED, SHALL FOLLOW ALL SECTIONS OF THE ACI "DETAILING MANUAL-2004" (SP-66 04), THE ACI "BUILDING CODE REQUIREMENTS FOR REINFORCED CONCRETE" (ACI 318-14), AND ALL SECTIONS OF THE CONCRETE REINFORCING STEEL INSTITUTE (CRSI) "MANUAL OF STANDARD PRACTICE."

2) UNLESS OTHERWISE NOTED, LAP SPLICES OF DEFORMED REINFORCING BARS SHALL CONFORM TO ACI REQUIREMENTS FOR CLASS B TENSION SPLICES. REFER TO LAP LENGTH SCHEDULES FOR TYPICAL LAP REQUIREMENTS.

3) PLACEMENT OF WELDED WIRE REINFORCEMENT SHALL BE CONTINUOUS, SHALL NOT BE INTERRUPTED BY BEAMS AND GIRDERS, AND SHALL BE LAPPED A MINIMUM OF 8-INCHES UNLESS SHOWN OTHERWISE IN DETAILS.

4) PROVIDE CORNER BARS IN BOTH FACES OF ALL CONTINUOUS GRADE BEAMS, FOOTINGS AND WALLS. NUMBER, SIZE, AND SPACING OF CORNER BARS SHALL BE EQUAL TO NUMBER, SIZE AND SPACING OF HORIZONTAL REINFORCING WITH WHICH THEY LAP AND SHALL HAVE CLASS B TENSION LAP SPLICES IN EACH DIRECTION. REFER TO TYPICAL DETAILS FOR ADDITIONAL INFORMATION.

5) AT INTERSECTING FOUNDATIONS, EXTEND ALL HORIZONTAL REINFORCING OF THE INTERSECTING MEMBERS BEYOND THE POINT OF INTERSECTION TO THE OPPOSITE FACE. BEND TO A STANDARD 90 DEGREE HOOK OR PROVIDE BENT DOWELS OF EQUAL SIZE AND SPACING AND LAP AS REQUIRED FOR A CLASS B TENSION SPLICE (BUT NOT LESS THAN 12") IN EACH DIRECTION. REFER TO TYPICAL DETAILS FOR ADDITIONAL INFORMATION.

6) PROVIDE TIES COMPLYING WITH ACI 318-14 IN ALL CONCRETE COLUMNS AND PILASTERS. EVERY CORNER AND ALTERNATING LONGITUDINAL BAR SHALL HAVE A LATERAL SUPPORT PROVIDED BY THE CORNER OF A TIE WITH AN INCLUDED ANGLE ON NOT MORE THAN 135-DEGREES. NO UNSUPPORTED LONGITUDINAL BAR SHALL BE FARTHER THAN 6-IN. CLEAR ON EACH SIDE ALONG THE TIE FROM A LATERALLY SUPPORTED BAR.

F. OPENINGS IN CONCRETE STRUCTURES:

1) ALL OPENINGS IN CONCRETE WALLS LARGER THAN 1'-0" IN SIZE SHALL HAVE A MINIMUM OF (2)#5 BARS PLACED AT ALL SIDES OF OPENING AND EXTENDED 2'-6" BEYOND EDGE OF OPENING. IN ADDITION, DIAGONAL CORNER BARS SHALL EXTEND 2'-6" EACH WAY BEYOND CORNER OF OPENING. REFER TYPICAL DETAILS FOR MORE INFORMATION.

2) THE SIZE AND LOCATION OF ALL FLOOR PITS, TRENCH DRAINS, AND OPENINGS FOR ALL DUCTS AND PIPES THROUGH WALLS, FLOORS, AND FOUNDATION WORK SHALL BE VERIFIED WITH THE MECHANICAL, PLUMBING, FIRE PROTECTION AND ELECTRICAL CONTRACTOR'S REQUIREMENTS PRIOR TO THE START OF ANY CONCRETE WORK.

G. JOINTS IN CONCRETE CONSTRUCTION:

1) CONCRETE SLABS-ON-GRADE: REFER TO SLAB-ON-GRADE CONSTRUCTION NOTES ABOVE FOR INFORMATION REGARDING JOINTS.
2) CURING AT CONSTRUCTION JOINTS: CONCRETE POURS EITHER SIDE OF CONSTRUCTION JOINTS SHALL NOT BE CONCURRENT. CONCRETE SHALL BE ALLOWED TO CURE A MINIMUM OF 7 DAYS PRIOR TO PLACEMENT OF ADJACENT CONCRETE.

H. CONCRETE MISCELLANEOUS:

1) WATERSTOPS AND WATERPROOFING: ALL CONSTRUCTION JOINTS (VERTICAL AND HORIZONTAL) IN BELOW-GRADE CONCRETE WALLS, TRENCHES AND PITS SHALL BE KEYED AND HAVE BENTONITE WATERSTOPS INSTALLED UNLESS NOTED OTHERWISE. ALL BELOW-GRADE CONCRETE WALLS, PITS AND TRENCHES SHALL BE WATERPROOFED AS SHOWN IN ARCHITECTURAL DRAWINGS, UNLESS NOTED OTHERWISE.

2) EQUIPMENT PADS: PROVIDE CONCRETE EQUIPMENT PADS OF SIZE REQUIRED FOR EQUIPMENT FURNISHED. SEE MECHANICAL, PLUMBING, FIRE PROTECTION AND ELECTRICAL DRAWINGS FOR NUMBER, SIZE, AND LOCATION OF SUCH PADS. UNLESS OTHERWISE SHOWN, MINIMUM PAD THICKNESS SHALL BE 4" AND SHALL EXTEND A MINIMUM OF 6" BEYOND THE FACE OF THE EQUIPMENT. MINIMUM REINFORCING SHALL BE #4 BARS AT 12" O.C. EACH WAY. TOOLED OR CHAMFERED EDGES SHALL BE PROVIDED AT ALL EQUIPMENT PADS. ANCHORAGE TO SUPPORTING SLAB SHALL BE MADE. REFER TO TYPICAL DETAILS.

3) CHAMFERED EDGES: UNLESS NOTED OTHERWISE ON ARCHITECTURAL DRAWINGS, PROVIDE 3/4" CHAMFER ON ALL EXPOSED CONCRETE EDGES.

4) SURFACE FINISH: ALL HORIZONTAL CONCRETE SURFACES SHALL HAVE A TROWELED FINISH UNLESS NOTED OTHERWISE IN ARCHITECTURAL DRAWINGS OR FLOORING SPECIFICATIONS.

5) MOIST CURING OF SLABS: SLABS-ON-GRADE AND SLABS-ON-DECK SHALL BE WATER CURED FOR A MINIMUM OF 7 DAYS BY PONDING, SPRAYING, SPRINKLING OR BY USE OF SATURATED COVERINGS. CURING COMPOUNDS ARE EXPRESSLY PROHIBITED.

9. REINFORCED HOLLOW CONCRETE MASONRY NOTES

A. MASONRY DIMENSIONS: REFER TO ARCHITECTURAL DRAWINGS FOR ALL DIMENSIONS RELEVANT TO ALL CONCRETE MASONRY CONSTRUCTION.

B. CONCRETE MASONRY UNITS:

1) ALL CONCRETE MASONRY UNITS SHALL BE 1 OR 2-CELL LIGHTWEIGHT CONCRETE BLOCK WITH AN OVEN DRY WEIGHT OF LESS THAN 105 LBS PER CUBIC FOOT.

2) ALL CONCRETE MASONRY UNITS SHALL HAVE A MINIMUM COMPRESSIVE STRENGTH OF 2000 PSI ON THE NET AREA (INDIVIDUAL STRENGTH PER ASTM C 90).

C. MORTAR:

1) MORTAR MATERIALS: CONCRETE MASONRY SHALL BE CONSTRUCTED WITH PORTLAND CEMENT/LIME, TYPE S MORTAR CONFORMING TO THE PROPORTION SPECIFICATION OF ASTM C270.

2) MORTAR SUBMITTAL REQUIREMENTS: BECAUSE THE PROPORTION SPECIFICATION FOR MORTAR IS PRESCRIPTIVE, THERE ARE NO MORTAR TESTS REQUIRED. SUBMITTAL INFORMATION SHALL INCLUDE THE PROPORTIONS OF MORTAR MATERIALS AND CERTIFICATES OF COMPLIANCE FOR EACH RAW MATERIAL USED.

3) MORTAR MIX PROPORTIONS: MORTAR MATERIAL PROPORTIONS BY VOLUME SHALL BE AS FOLLOWS:
A) PORTLAND CEMENT: 1
B) HYDRATED LIME OR LIME PUTTY: OVER 0.25 TO 0.50
C) AGGREGATE RATIO (MEASURED IN DAMP LOOSE CONDITIONS): NOT LESS THAN 2.25 AND NOT MORE THAN 3.0 TIMES THE SUM OF THE VOLUMES OF CEMENT AND LIME MATERIALS.

4) MORTAR MIXING: MIX CEMENTITIOUS MATERIALS AND AGGREGATES BETWEEN 3 AND 5 MINUTES IN A MECHANICAL BATCH MIXER WITH A SUFFICIENT AMOUNT OF WATER TO PRODUCE A WORKABLE CONSISTENCY. UNLESS SPECIFICALLY ALLOWED BY THE OWNER'S REPRESENTATIVE, DO NOT HAND MIX MORTAR. MAINTAIN WORKABILITY OF MORTAR BY REMIXING OR RETEMPERING. DISCARD MORTAR WHICH HAS BEGUN TO STIFFEN OR IS NOT USED WITHIN 2.5 HOURS AFTER INITIAL MIXING.

5) MORTAR PROTRUSIONS: REMOVE MORTAR PROTRUSIONS EXTENDING ½-INCH OR MORE INTO CELLS OR CAVITIES TO BE GROUTED.

6) ADMIXTURES: DO NOT USE ADMIXTURES CONTAINING MORE THAN 0.2 PERCENT CHLORIDE IONS.

7) MORTAR QUALITY ASSURANCE: TESTING AGENCY SHALL PERIODICALLY OBSERVE AND CONFIRM THAT THE PROPORTIONS OF SITE-PREPARED MORTAR COMPLY WITH THE PROPORTIONS OUTLINED ABOVE.

D. GROUT:

1) GROUT MATERIALS: GROUT USED IN THE CONSTRUCTION OF MASONRY SHALL CONFORM TO THE PROPORTION SPECIFICATION OF ASTM C476. GROUT AGGREGATES SHALL COMPLY WITH ASTM C404.

2) GROUT SUBMITTAL REQUIREMENTS: BECAUSE THE PROPORTION SPECIFICATION FOR GROUT IS PRESCRIPTIVE, THERE ARE NO GROUT TESTS REQUIRED. SUBMITTAL INFORMATION SHALL INCLUDE THE PROPORTIONS OF GROUT MATERIALS AND CERTIFICATES OF COMPLIANCE FOR EACH RAW MATERIAL USED.

3) GROUT MIX PROPORTIONS: GROUT MATERIAL PROPORTIONS BY VOLUME SHALL BE AS FOLLOWS:

GROUT TYPE	CEMENT	LIME	AGGREGATE (DAMP, LOOSE)*	
			FINE	COARSE
FINE	1	0 TO 1/10	2.25 TO 3	-
COARSE	1	0 TO 1/10	2.25 TO 3	1 TO 2

*TIMES THE SUM OF THE VOLUMES OF THE CEMENT & LIME MATERIALS

4) GROUT SLUMP: SITE-MIX GROUT TO A CONSISTENCY THAT HAS A SLUMP BETWEEN 8 AND 11 INCHES. DISCARD GROUT THAT DOES NOT MEET THE SPECIFIED SLUMP WITHOUT ADDING WATER AFTER INITIAL MIXING.

5) GROUT QUALITY ASSURANCE: TESTING AGENCY SHALL PERIODICALLY OBSERVE AND CONFIRM THAT THE PROPORTIONS AND SLUMP OF SITE-PREPARED GROUT COMPLY WITH THE REQUIREMENTS OUTLINED ABOVE.

E. INSPECTION: PRIOR TO THE START OF MASONRY CONSTRUCTION, THE CONTRACTOR SHALL VERIFY THE FOLLOWING:

1) VERIFY FOUNDATIONS ARE CONSTRUCTED WITHIN A LEVEL ALIGNMENT TOLERANCE OF PLUS OR MINUS 1/2 IN.

2) VERIFY REINFORCING DOWELS ARE POSITIONED IN ACCORDANCE WITH THE PROJECT DRAWINGS.

3) IF STATED CONDITIONS ARE NOT MET, NOTIFY THE OWNER'S REPRESENTATIVE PRIOR TO PROCEEDING.

F. PREPARATION:

1) CLEANING:
A) CLEAN REINFORCEMENT AND SHANKS OF ANCHOR BOLTS BY REMOVING MUD, OIL, OR OTHER MATERIALS THAT WILL ADVERSELY AFFECT OR REDUCE BOND AT THE TIME MORTAR OUR GROUT IS PLACED.
B) PRIOR TO PLACING MASONRY, REMOVE LAITANCE, LOOSE AGGREGATE, AND ANYTHING ELSE THAT WOULD PREVENT MORTAR FROM BONDING TO THE FOUNDATION.

2) WETTING: DO NOT WET CONCRETE MASONRY UNITS BEFORE LAYING. WET CUTTING IS PERMITTED.

3) DEBRIS: CONSTRUCT GROUT SPACES FREE OF MORTAR DROPPING, DEBRIS, LOOSE AGGREGATES, AND ANY MATERIAL DELETERIOUS TO MASONRY GROUT.

4) REINFORCEMENT: PLACE REINFORCEMENT AND TIES IN GROUT SPACES PRIOR TO GROUTING.

5) CLEANOUTS: PROVIDE CLEANOUTS IN THE BOTTOM COURSE OF MASONRY FOR EACH GROUT POUR WHEN THE GROUT POUR HEIGHT EXCEEDS 5 FT 4 IN.
A) CONSTRUCT CLEANOUTS SO THAT THE SPACE TO BE GROUTED CAN BE CLEANED AND INSPECTED. IN SOLID GROUTED MASONRY, SPACE CLEANOUTS HORIZONTALLY A MAXIMUM OF 32 IN. ON CENTER.
B) CONSTRUCT CLEANOUTS WITH AN OPENING OF SUFFICIENT SIZE TO PERMIT REMOVAL OF DEBRIS. THE MINIMUM OPENING DIMENSION SHALL BE 3 IN.
C) AFTER CLEANING, CLOSE CLEANOUTS WITH CLOSURES BRACED TO RESIST GROUT PRESSURE.

G. MASONRY ERECTION:

1) BOND PATTERN: UNLESS OTHERWISE INDICATED, LAY MASONRY IN RUNNING BOND.

2) PLACING MORTAR UNITS: COMPLY WITH ARTICLE 3.3 B OF ACI 530.1-13 "SPECIFICATION FOR MASONRY STRUCTURES AND COMMENTARY" INCLUDING BUT NOT LIMITED TO THE FOLLOWING;
A) BED JOINTS AT FOUNDATIONS: IN THE STARTING COURSE ON FOUNDATIONS AND OTHER SUPPORTING MEMBERS, CONSTRUCT BED JOINTS SO THAT THE BED JOINT THICKNESS IS AT LEAST 1/4 IN. AND NOT MORE THAN:
(i) 3/4 IN. WHEN THE MASONRY IS UNGROUTED OR PARTIALLY GROUTED
(ii) 1-1/4 IN. WHEN THE FIRST COURSE OF MASONRY IS SOLID GROUTED AND SUPPORTED BY A CONCRETE FOUNDATION.
B) OPENINGS IN TROUGH BLOCKS: AT ALL VERTICAL REINFORCING LOCATIONS, THE BOTTOM OF TROUGH BLOCKS SHALL BE CUT TO PROVIDE A MINIMUM 2-INCH DIAMETER HOLE TO ALLOW PLACEMENT OF VERTICAL REINFORCING AND PLACEMENT OF GROUT THROUGH THE HOLE.

3) EMBEDDED ITEMS AND ACCESSORIES: COMPLY WITH ARTICLE 3.3 D OF ACI 530.1-13 "SPECIFICATION FOR MASONRY STRUCTURES AND COMMENTARY."

4) TEMPORARY BRACING OF MASONRY: DESIGN, PROVIDE, AND INSTALL TEMPORARY BRACING THAT WILL ASSURE STABILITY OF MASONRY DURING CONSTRUCTION.

5) SITE TOLERANCES: ERECT MASONRY WITHIN THE TOLERANCES DEFINED IN ARTICLE 3.3 F OF ACI 530.1-13 "SPECIFICATION FOR MASONRY STRUCTURES AND COMMENTARY."

6) PLACING REINFORCING: COMPLY WITH ALL PROVISIONS OF ARTICLE 3.4 OF ACI 530.1-13 "SPECIFICATION FOR MASONRY STRUCTURES AND COMMENTARY." MAINTAIN CLEAR DISTANCE BETWEEN REINFORCING BARS AND ANY FACE OF MASONRY UNIT OR FORMED SURFACE, BUT NOT LESS THAN 1/4-IN FOR FINE GROUT OR 1/2-IN. FOR COARSE GROUT.

7) CONTROL JOINTS: LOCATION AND DETAILS OF CONTROL JOINTS SHALL BE AS DEFINED ON ARCHITECTURAL DRAWINGS. IF NOT SHOWN ON THE ARCHITECTURAL DRAWINGS, THE LOCATION OF CONTROL JOINTS SHALL BE DETAILED BY THE MASONRY CONTRACTOR AND SUBMITTED FOR REVIEW AND APPROVAL BY THE ARCHITECT AND ENGINEER. THE DISTANCE BETWEEN CONTROL JOINTS SHOULD NOT EXCEED THE LESSER OF 1.5 TIMES THE WALL HEIGHT OR 25 FT. IN ADDITION, CONTROL JOINTS SHOULD TYPICALLY BE PROVIDED AT THE FOLLOWING LOCATIONS:
A) AT CHANGES IN WALL HEIGHT.
B) AT PILASTERS AND CHANGES IN WALL THICKNESS.
C) DIRECTLY OVER EXPANSION JOINTS IN SUPPORTING FOUNDATIONS.
D) AT EXPANSION JOINTS IN ROOFS AND FLOORS THAT BEAR ON THE WALL.
E) NEAR ONE SIDE OF OPENINGS LESS THAN 6 FT. WIDE. REFER TYPICAL MASONRY OPENING DETAILS.
F) NEAR BOTH SIDES OF OPENINGS GREATER THAN 6 FT. WIDE. REFER TYPICAL MASONRY OPENING DETAILS.
G) AT INTERSECTING WALLS.
H) AT MAXIMUM OF ONE-HALF THE TYPICAL CONTROL JOINTS SPACING FROM CORNERS.

8) PENETRATIONS: OPENINGS FOR ALL DUCTS AND PIPES PENETRATING MASONRY WALLS SHALL BE VERIFIED AND COORDINATED WITH MECHANICAL AND ELECTRICAL CONTRACTORS REQUIREMENTS. PENETRATIONS THROUGH WALLS SHALL HAVE ADDITIONAL REINFORCING AS SHOWN ON IN THE TYPICAL DETAILS.

9) LINTELS: LINTELS SHALL BE PROVIDED WHERE REQUIRED ACCORDING TO TYPICAL LINTEL DETAILS AND SCHEDULE OR AS INDICATED ON PLAN SHEETS. SOLID BOTTOM TROUGH BLOCKS SHALL BE USED AT THE HEADS OF ALL OPENINGS.

10) PERMANENT BRACING: UNLESS BRACED BY ATTACHMENT TO A STRUCTURAL SLAB OR METAL DECK, THE TOP OF MASONRY WALLS SHALL BE BRACED IN ACCORDANCE WITH THE TYPICAL DETAILS SHOWN IN THE DRAWINGS.

H. CONCRETE MASONRY REINFORCING:

1) MINIMUM HORIZONTAL AND VERTICAL REINFORCING IN CMU WALLS SHALL BE PROVIDED AS FOLLOWS:

MINIMUM REINFORCING IN CMU WALLS					
WALL TYPE	CMU TYPE	GROUTED VERTICAL CELL REINFORCING		HORIZONTAL BOND BEAM REINFORCING	
		BARS	SPACING OF GROUTED CELLS	BARS	SPACING OF BOND BEAMS
EXTERIOR	8"	(1)#5	48" O.C.	(2)#4	48" O.C.
INTERIOR LOAD-BEARING	8"	(1)#5	48" O.C.	(2)#4	48" O.C.
INTERIOR PARTITION	8"	(1)#5	48" O.C.	(2)#4	48" O.C.

NOTES:
1. ALL SINGLE BAR REINFORCING IN VERTICAL CELLS SHALL BE CENTERED IN CELL UNLESS NOTED OTHERWISE.
2. FOR DOUBLE BAR REINFORCING IN VERTICAL CELLS:
a. THE CLEAR DISTANCE BETWEEN PARALLEL BARS SHALL NOT BE LESS THAT THE NOMINAL DIAMETER OF THE BAR, NOR LESS THAN 1 IN.
b. REINFORCING BARS SHALL HAVE A THICKNESS OF GROUT BETWEEN THE BARS AND MASONRY UNITS NOT LESS THAN 1/4 IN. FOR FINE GROUT OR 1/2 IN. FOR COARSE GROUT.
3. AN ADDITIONAL VERTICAL BAR OF THE SAME SIZE AND LENGTH AS THE NORMAL REINFORCING BAR SHALL BE PLACED IN GROUTED CELLS:
a. IN FIRST TWO JAMB CELLS ON EACH SIDE OF WALL OPENINGS.
b. IN CELLS ON EACH SIDE OF CONTROL JOINTS OR EXPANSION JOINTS.
c. IN CELL AT ALL WALL INTERSECTIONS AND FIRST ADJACENT CELL IN EACH DIRECTION.
4. ADDITIONAL BOND BEAMS SHALL BE PROVIDED FOR ALL MASONRY LINTELS AND WALL OPENINGS AS SHOWN IN TYPICAL DETAILS.

2) THE MINIMUM LENGTH OF LAP SPLICES OF REINFORCING STEEL IN MASONRY SHALL BE AS SHOWN IN THE CMU REINFORCING LAP SCHEDULE.

3) FOUNDATION DOWELS:
A) THERE SHALL BE A FOUNDATION DOWEL FOR EACH VERTICAL WALL REINFORCING BAR.
B) THE MINIMUM REQUIRED EMBEDMENT OF DOWELS IN CONCRETE FOUNDATIONS SHALL BE AS REQUIRED FOR A CLASS B SPLICE FOR THE SPECIFIED COMPRESSIVE STRENGTH FOR THE FOUNDATION. REFER TO CONCRETE LAP LENGTH SCHEDULES FOR TYPICAL LAP REQUIREMENTS. ALTERNATIVELY, THE FOUNDATION DOWELS MAY BE DEVELOPED WITH A STANDARD ACI 90 DEGREE HOOK INTO THE FOUNDATION.
C) MASONRY DOWELS SHOWN CAST-IN-PLACE IN DOCUMENTS SHALL BE TIED IN PLACE TO FOUNDATION REINFORCING. WET STICKING OF MASONRY DOWELS IS NOT PERMITTED. MASONRY CONTRACTOR SHALL VERIFY PLACEMENT AND LOCATION OF DOWELS PRIOR TO CONCRETE PLACEMENT. EPOXY EMBEDDING DOWELS SHALL NOT BE PERMITTED WITHOUT APPROVAL BY THE OWNER'S REPRESENTATIVE.
D) AT CONTRACTOR'S OPTION, FOUNDATION DOWELS MAY BE DRILLED AND GROUTED WITH EPOXY MATERIAL TO DEVELOP THE TENSILE CAPACITY OF THE BAR IN ACCORDANCE WITH POST-INSTALLED ANCHORS AND DOWEL NOTES BELOW. EPOXY MANUFACTURER INFORMATION AND EMBEDMENT DEPTH SHALL BE SUBMITTED FOR REVIEW AND APPROVAL BY THE OWNER'S REPRESENTATIVE PRIOR TO PLACEMENT OF WALL FOUNDATIONS.
E) FOUNDATION DOWELS SHALL EXTEND UP INTO THE GROUTED CELLS TO PROVIDE THE MINIMUM LAP SPLICE LENGTH SHOWN IN THE CMU REINFORCING LAP SCHEDULE.
F) FOUNDATION DOWELS THAT INTERFERE WITH UNIT WEBS ARE PERMITTED TO BE BENT A MAXIMUM OF 1 IN. HORIZONTALLY FOR EVERY 6 IN. OF VERTICAL HEIGHT. REFER TYPICAL DETAIL FOR PERMITTED BENDING OF FOUNDATION DOWELS.

4) NORMAL VERTICAL WALL REINFORCING SHALL EXTEND CONTINUOUSLY FROM THE TOP OF FOUNDATION TO EMBED WITH A STANDARD HOOK INTO THE FLOOR OR ROOF DIAPHRAGM BOND BEAM. THE DIAPHRAGM BOND BEAM SHALL BE DEFINED AS THE BOND BEAM AT THE FLOOR OR ROOF LEVEL OR WHERE KICKER ANGLES OR CLIP ANGLES ARE PROVIDE LATERAL SUPPORT.

5) BOND BEAM REINFORCING STEEL FOR INTERIOR AND EXTERIOR WALLS SHALL BE CONTINUOUS THROUGHOUT, EXCEPT AT CONTROL JOINTS. AT CONTROL JOINTS, INTERMEDIATE BOND BEAM REINFORCEMENT SHALL BE CUT, BUT SHALL BE CONTINUOUS AT DIAPHRAGM BOND BEAMS. EXTEND REINFORCING BARS NOT LESS THAN THAT SPECIFIED ON LAP SCHEDULE. REFER TO TYPICAL DETAILS AND LAP SCHEDULE FOR ADDITIONAL INFORMATION.

I. GROUT PLACEMENT:

1) GROUT PLACING TIME: PLACE GROUT WITHIN 1-1/2 HOURS FROM INTRODUCING WATER IN THE MIXTURE AND PRIOR TO INITIAL SET.

2) GROUT POUR HEIGHT: DO NOT EXCEED THE MAXIMUM GROUT POUR HEIGHT GIVEN IN THE TABLE BELOW. THE GROUT POUR HEIGHT IS DEFINED AS THE TOTAL HEIGHT OF MASONRY TO BE GROUTED PRIOR TO ERECTION OF ADDITIONAL MASONRY. A GROUT POUR CONSISTS OF ONE OR MORE GROUT LIFTS.

GROUT SPACE REQUIREMENTS PER ACI 530-13 BUILDING CODE REQUIREMENTS FOR MASONRY STRUCTURES, TABLE 3.2.1			
GROUT TYPE1	MAXIMUM GROUT POUR HEIGHT, FT.	MINIMUM CLEAR WIDTH OF GROUT SPACE,2,3 IN.	MINIMUM CLEAR GROUT SPACE DIMENSIONS FOR GROUTING CELLS OF HOLLOW UNITS,3,4 IN. X IN.
FINE	1	3/4	1-1/2 X 2
FINE	5.33	2	2 X 3
FINE	12.67	2-1/2	2-1/2 X 3
FINE	24	3	3 X 3
COARSE	1	1-1/2	1-1/2 X 3
COARSE	5.33	2	2-1/2 X 3
COARSE	12.67	2-1/2	3 X 3
COARSE	24	3	3 X 4

FOOTNOTES:
1. FINE AND COARSE GROUTS ARE DEFINED IN ASTM C476.
2. FOR GROUTING BETWEEN MASONRY WYTHES.
3. MINIMUM CLEAR WIDTH OF GROUT SPACE AND MINIMUM CLEAR GROUT SPACE DIMENSION ARE THE NET DIMENSION OF THE SPACE DETERMINED BY SUBTRACTING MASONRY PROTRUSIONS AND THE DIAMETERS OF HORIZONTAL BARS FROM THE AS-BUILT CROSS-SECTION OF THE GROUT SPACE. SELECT THE GROUT TYPE AND MAXIMUM GROUT POUR HEIGHT BASED ON THE MINIMUM CLEAR SPACE.
4. AREA OF VERTICAL REINFORCEMENT SHALL NOT EXCEED 6 PERCENT OF THE AREA OF THE GROUT SPACE.

3) GROUT LIFT HEIGHT: PLACE GROUT IN LIFTS NOT EXCEEDING 5 FT. 4 IN. A GROUT LIFT IS DEFINED AS AN INCREMENT OF GROUT HEIGHT WITHIN A TOTAL GROUT POUR.

4) GROUT CONSOLIDATION: CONSOLIDATE GROUT POURS BY MECHANICAL VIBRATION, AND RECONSOLIDATE BY MECHANICAL VIBRATION AFTER INITIAL WATER LOSS AND SETTLEMENT HAS OCCURRED.

5) GROUT KEY: WHEN GROUTING, FORM GROUT KEYS BETWEEN GROUT POURS. FORM GROUT KEYS BETWEEN GROUT LIFTS WHEN THE FIRST LIFT IS PERMITTED TO SET PRIOR TO PLACEMENT OF THE SUBSEQUENT LIFT.
A) FORM A GROUT KEY BY TERMINATING THE GROUT A MINIMUM OF 1-1/2 IN. BELOW A MORTAR JOINT.
B) DO NOT FORM GROUT KEYS WITHIN BOND BEAMS.
C) AT BOND BEAMS OR LINTELS LAID WITH CLOSED BOTTOM UNITS, TERMINATE THE GROUT POUR AT THE BOTTOM OF THE BEAM OR LINTEL WITHOUT FORMING A GROUT KEY.

10. POST-INSTALLED ANCHORS AND DOWELS

A. QUALIFICATION REQUIREMENTS FOR INSTALLERS

1) CONTRACTOR SHALL REQUEST, SCHEDULE AND FACILITATE THE ANCHOR AND/OR ADHESIVE MANUFACTURER'S REPRESENTATIVE TO PROVIDE ONSITE INSTALLATION TRAINING FOR ALL THE MANUFACTURER'S SPECIFIED ANCHORING PRODUCTS. THE ENGINEER MUST RECEIVE DOCUMENTED CONFIRMATION THAT ALL OF THE CONTRACTOR'S ANCHOR INSTALLATION PERSONNEL ARE TRAINED PRIOR TO COMMENCEMENT OF ANCHOR INSTALLATION OPERATIONS.

2) PER ACI 318-14 SECTION 17.8.2.2, INSTALLATION OF ADHESIVE ANCHORS HORIZONTALLY OR UPWARDLY INCLINED SHALL BE PERFORMED BY PERSONNEL CERTIFIED BY AN APPLICABLE CERTIFICATION PROGRAM. CERTIFICATION SHALL INCLUDE WRITTEN AND PERFORMANCE TESTS IN ACCORDANCE WITH THE ACI/CRSI ADHESIVE ANCHOR INSTALLER (AAI) CERTIFICATION PROGRAM, OR EQUIVALENT. WHEN APPLICABLE, SOME DOWN-HOLE INSTALLATIONS SHOWN ON DRAWINGS SUPPORTING SUSTAINED TENSION LOADS ARE DESIGNATED WITH A (CERT) AFTER THE ANCHOR CALLOUT AND SHALL ALSO REQUIRE INSTALLER CERTIFICATION AS OUTLINED ABOVE.

B. QUALIFICATION REQUIREMENTS FOR PRODUCTS

1) POST-INSTALLED EXPANSION AND UNDERCUT ANCHORS SHALL MEET THE ASSESSMENT CRITERIA OF ACI 355.2 "QUALIFICATION OF POST-INSTALLED MECHANICAL ANCHORS IN CONCRETE."

2) POST-INSTALLED ADHESIVE ANCHORS SHALL MEET THE ASSESSMENT CRITERIA OF ACI 355.4 "QUALIFICATION OF POST-INSTALLED ADHESIVE ANCHORS IN CONCRETE."

AGP
the Abla Griffin Partnership L.L.C.
201 N. BROADWAY
SUITE 210
MOORE, OK. 73160
405.735.3477
AGP@theAGP.net
www.theAGP.net

CEDAR CREEK
CIVIL

KFC ENGINEERING
STRUCTURAL

SALAS O'BRIEN
MECHANICAL / ELECTRICAL

PROFESSIONAL STRUCTURAL ENGINEER
BRANDON W. BIRCH
26145
OKLAHOMA

CJC
drawn by

BWB
checked by

JULY 2023
date

revisions

MOORE PUBLIC SCHOOLS
BOARD OF EDUCATION
MOORE, OKLAHOMA

MOORE Public Schools
LEARNING FOR LIFE

CLASSROOM ADDITION
HIGHLAND WEST
JUNIOR HIGH SCHOOL

sheet no:

S101

KFC engineering
Kirkpatrick Forest Curtis PC
Structural Engineering
OK CA #3888, EXP. 06/30/25
525 Central Park Drive, Suite 202
Oklahoma City, OK 73105
405.528.4596 | kfcengr.com

OWNERSHIP USE OF DOCUMENTS:

AGP EXPRESSLY RESERVES ITS COPYRIGHT AND OTHER PROPERTY RIGHTS OF ALL PLANS AND DRAWINGS DESIGNED AND/OR PRODUCED. PLANS AND DRAWINGS ARE NOT TO BE REPRODUCED IN ANY FORM OR MANNER WITHOUT THE EXPRESSED WRITTEN CONSENT OF AGP.

C. APPROVED ANCHORING PRODUCTS: THE ANCHORING SYSTEMS SHOWN BELOW HAVE BEEN USED IN THE ANCHOR DESIGNS SHOWN IN THE CONSTRUCTION DOCUMENTS. SUBSTITUTION REQUESTS FOR ALTERNATE PRODUCTS MUST BE APPROVED IN WRITING BY THE ENGINEER OF RECORD PRIOR TO USE. CONTRACTOR SHALL PROVIDE CALCULATIONS DEMONSTRATING THAT THE SUBSTITUTED PRODUCT IS CAPABLE OF ACHIEVING THE PERFORMANCE VALUES OF THE SPECIFIED PRODUCT. SUBSTITUTIONS WILL BE EVALUATED BY THEIR HAVING AN ICC ESR SHOWING COMPLIANCE WITH THE RELEVANT BUILDING CODE FOR SEISMIC USES, LOAD RESISTANCE, INSTALLATION CATEGORY, AND AVAILABILITY OF COMPREHENSIVE INSTALLATION INSTRUCTIONS. ADHESIVE ANCHOR EVALUATION WILL ALSO CONSIDER CREEP, IN-SERVICE TEMPERATURE AND INSTALLATION TEMPERATURE.

1) ANCHORAGE TO CONCRETE

A) ADHESIVE ANCHORS:
(1) HILTI HIT-HY 200 SYSTEM WITH HILTI HIT-Z ROD OR HAS-E THREADED ROD [ICC ESR-3187].

B) MEDIUM DUTY MECHANICAL ANCHORS:
(1) HILTI KWIK BOLT 3 EXPANSION ANCHORS (UNCRACKED CONCRETE ONLY) [ICC ESR-2302]

2) REBAR DOWELING INTO CONCRETE

A) ADHESIVE ANCHORS:
(1) HILTI HIT-HY 200 SYSTEM WITH CONTINUOUSLY DEFORMED REBAR [ICC ESR-3187].

3) ANCHORAGE TO SOLID GROUTED MASONRY

A) ADHESIVE ANCHORS:
(1) HILTI HIT-HY 270 MASONRY ADHESIVE ANCHORING SYSTEM WITH HILTI HAS-E CONTINUOUSLY THREADED ROD OR CONTINUOUSLY DEFORMED STEEL REBAR [ICC ESR-4143].

B) MECHANICAL ANCHORS:
(1) HILTI KWIK BOLT-3 EXPANSION ANCHORS [ICC ESR-1385].

D. PREPARATION PRIOR TO INSTALLATION

1) CURING OF BASE MATERIAL: DO NOT DRILL OR CORE HOLES INTO SUPPORTING CONCRETE OR MASONRY MATERIALS UNTIL THE CONCRETE, MORTAR AND/OR GROUT HAVE BEEN ADEQUATELY CURED TO ACHIEVE FULL DESIGN STRENGTH. IN NO CASE SHALL ANCHORS BE INSTALLED PRIOR TO THE CONCRETE HAVING AN AGE OF LESS THAN 21 DAYS.

2) AVOIDANCE OF EMBEDDED ITEMS: PRIOR TO DRILLING OR CORING OPERATIONS, THE CONTRACTOR SHALL LOCATE AND MARK ALL POTENTIALLY CONFLICTING REINFORCING BARS, UTILITIES AND OTHER EMBEDDED ITEMS BY INDUCTION SCANNING, GROUND PENETRATING RADAR, X-RAY, OR OTHER APPROVED NON-DESTRUCTIVE METHOD. CONTRACTOR SHALL AVOID DRILLING OR CORING HOLES THAT MAY DAMAGE THESE EMBEDDED ITEMS. NOTIFY THE ENGINEER IF CONFLICTING EMBEDDED ITEMS DO NOT ALLOW INSTALLATION OF POST-INSTALLED ANCHORS IN ACCORDANCE WITH THE CONSTRUCTION DOCUMENTS AND/OR APPROVED SHOP DRAWINGS.

3) INSTALLATION EQUIPMENT: THE CONTRACTOR SHALL PROVIDE ALL EQUIPMENT REQUIRED TO INSTALL THE EXPANSION AND/OR ADHESIVE ANCHOR INCLUDING, BUT NOT LIMITED TO, DRILLS, SETTING TOOLS, CLEAN-OUT BRUSHES, BLOWOUT BULBS, OIL-FREE COMPRESSED AIR, VACUUMS, WRENCHES, ETC.

E. INSTALLATION

1) ALL DRILLING AND CORING EQUIPMENT AND ALL METHODS FOR INSTALLATION OF POST-INSTALLED ANCHORS AND DOWELS SHALL BE IN ACCORDANCE WITH THE MANUFACTURER'S PRINTED INSTALLATION INSTRUCTIONS (MPII).

2) UNLESS OTHERWISE SPECIFIED, ANCHORS SHALL BE INSTALLED IN HOLES DRILLED WITH A ROTARY IMPACT HAMMER DRILL OR, WHERE NOT OTHERWISE PROSCRIBED, A ROCK DRILL. IN ALL CASES, THE BIT DIAMETER SHALL BE IN ACCORDANCE WITH THE MPII.

3) EMBEDMENT DEPTH AND MINIMUM ANCHOR PROJECTION OF THE ANCHOR ELEMENT FROM THE CONCRETE SURFACE SHALL BE AS SHOWN ON THE DRAWING OR DETAIL FOR THE PARTICULAR ANCHOR OR GROUP OF ANCHORS BEING INSTALLED.

4) ANCHOR CAPACITY IS DEPENDENT UPON SPACING BETWEEN ADJACENT ANCHORS AND PROXIMITY OF ANCHORS TO EDGES OF CONCRETE. INSTALL ANCHORS IN ACCORDANCE WITH SPACING AND EDGE CLEARANCES INDICATED ON THE DRAWINGS. ANCHOR SPACING AND EDGE DISTANCE VALUES SHALL NOT BE LESS THAN RECOMMENDED BY THE ANCHOR MANUFACTURER.

F. SPECIAL INSPECTION REQUIREMENTS

1) CONTINUOUS INSPECTIONS: PER ACI 318-14 SECTION 17.8.2.4, ADHESIVE ANCHORS INSTALLED IN HORIZONTALLY OR UPWARDLY INCLINED ORIENTATIONS SHALL BE CONTINUOUSLY INSPECTED DURING INSTALLATION BY AN INSPECTOR SPECIFICALLY APPROVED FOR THAT PURPOSE BY THE BUILDING OFFICIAL.

2) PERIODIC INSPECTIONS: PERIODIC SPECIAL INSPECTIONS SHALL BE PROVIDED FOR ALL OTHER POST-INSTALLED ANCHORS NOT INCLUDED IN THE CONTINUOUS INSPECTIONS REQUIRED ABOVE.

3) REPORTING REQUIREMENTS: THE SPECIAL INSPECTOR SHALL FURNISH A REPORT TO THE ENGINEER AND BUILDING OFFICIAL THAT THE WORK COVERED BY THE REPORT HAS BEEN PERFORMED AND THAT THE MATERIALS AND INSTALLATION PROCEDURES USED CONFORM WITH THE APPROVED CONSTRUCTION DOCUMENTS AND THE MANUFACTURER'S PRINTED INSTALLATION INSTRUCTIONS (MPII).

11. STEEL CONSTRUCTION NOTES

A. GOVERNING STANDARDS: ALL STRUCTURAL STEEL SHALL BE DETAILED, FABRICATED, AND ERECTED IN ACCORDANCE WITH THE FOLLOWING STANDARDS AND AS SUPPLEMENTED BY THESE GENERAL NOTES AND THE PROJECT DRAWINGS AND SPECIFICATIONS.

1) ANSI/AISC 360-10 "SPECIFICATION FOR STRUCTURAL STEEL BUILDINGS" (JUNE 22, 2010).
2) AISC 303-10 "CODE OF STANDARD PRACTICE FOR STEEL BUILDINGS AND BRIDGES" (APRIL 14, 2010).
3) ANSI/AWS "D1.1-STRUCTURAL WELDING CODE - STEEL", 2011 EDITION.
4) RCSC-2010 "SPECIFICATION FOR STRUCTURAL JOINTS USING HIGH-STRENGTH BOLTS" (DECEMBER 31, 2009).

B. CONNECTIONS:

1) CONNECTIONS SHALL BE DESIGNED TO SUPPORT THE FACTORED END REACTIONS SHOWN ON THE DRAWINGS. WHERE END REACTIONS ARE NOT SHOWN OR OTHERWISE SPECIFIED, CONNECTIONS SHALL BE DESIGNED TO SUPPORT A FACTORED END SHEAR OF THE GREATER OF 10 KIPS OR 50% OF THE TOTAL FACTORED UNIFORM LOAD CAPACITY SHOWN IN THE MANUAL OF STEEL CONSTRUCTION FOR THE GIVEN SHAPE, SPAN AND THE SPECIFIED STEEL.

2) FULL-DEPTH STIFFENER PLATES IN COLUMNS OR BEAMS SHALL MATCH THE YIELD STRENGTH OF THE BASE MEMBER.

C. STRUCTURAL BOLTS, ANCHOR RODS & BASE PLATES:

1) STEEL CONTRACTOR SHALL FURNISH ERECTION BOLTS AS REQUIRED FOR FIELD CONNECTIONS.

2) ALL BOLTS SHALL BE 3/4 IN. DIAMETER ASTM A325 WITH SUITABLE WASHERS AND NUTS UNLESS OTHERWISE SHOWN IN THE CONSTRUCTION DOCUMENTS OR APPROVED IN WRITING BY THE OWNER'S REPRESENTATIVE.

3) ALL BOLTS SHALL BE TIGHTENED TO THE SNUG-TIGHTENED JOINT REQUIREMENTS OF RCSC-10 EXCEPT AT SLIP-CRITICAL JOINTS OR WHERE NOTED OTHERWISE IN CONSTRUCTION DOCUMENTS OR IN FABRICATOR'S CONNECTION DESIGN.

4) UNLESS OTHERWISE INDICATED IN THE DRAWINGS, ALL ANCHOR RODS SHALL CONFORM TO THE SPECIFIED MATERIAL GRADE SHALL BE A MINIMUM 3/4 INCH DIAMETER WITH A MINIMUM FOUNDATION EMBEDMENT AS INDICATED IN STRUCTURAL DETAILS. THE EMBEDDED END SHALL HAVE EITHER A STANDARD BOLT HEAD, A HEAVY HEX NUT WITH THE THREADS SPOILED ABOVE AND BELOW THE NUT, OR JAMMED DOUBLE NUTS.

5) PRIOR TO PLACING CONCRETE, STEEL PLATE TEMPLATES SHALL BE PROVIDED TO FACILITATE PLACEMENT OF ANCHOR RODS IN DETAILED PLAN POSITIONS AND ELEVATIONS.

6) BASE PLATES SHALL BE LEVELED WITH LEVELING NUTS AND OVERSIZED WASHER PLATES OR WITH SHIM PACKS AT THE ERECTOR'S OPTION.

7) AFTER FINAL BASE PLATE POSITIONING, ANCHOR ROD NUTS SHALL BE INSTALLED TO A SNUG-TIGHT CONDITION AND WASHER PLATES SHALL BE FIELD WELDED AS INDICATED IN THE CONSTRUCTION DOCUMENTS.

D. STEEL FABRICATION & FINISH:

1) SHOP DRAWINGS SHALL BE SUBMITTED TO AND REVIEWED BY THE OWNER'S REPRESENTATIVE PRIOR TO COMMENCING FABRICATION. ANY FABRICATION INITIATED PRIOR TO APPROVAL OF SHOP DRAWINGS WILL BE AT THE SOLE RISK OF THE FABRICATOR.

2) ALL SHOP AND FIELD WELDS SHALL BE MADE IN ACCORDANCE WITH THE ANSI/AWS "D1.1-STRUCTURAL WELDING CODE - STEEL", 2011 EDITION. ALL WELDING SHALL USE LOW HYDROGEN PROCESSES.

3) ALL BEAMS THAT ARE REQUIRED TO HAVE CAMBER SHALL BE FABRICATED WITH CAMBER UPWARD. BEAMS WITHOUT SPECIFIED CAMBER SHALL BE FABRICATED SUCH THAT AFTER ERECTION, ANY NATURAL CAMBER DUE TO ROLLING OR SHOP FABRICATION IS UPWARD.

4) CUTS, HOLES, COPING, ETC. REQUIRED FOR WORK OF OTHER TRADES SHALL BE SHOWN ON THE SHOP DRAWINGS AND MADE IN THE SHOP. CUTS OR BURNING OF HOLES IN STRUCTURAL STEEL MEMBERS IN THE FIELD WILL NOT BE PERMITTED.

5) THE FABRICATOR SHALL BE RESPONSIBLE FOR ALL ERECTION AIDS. ANY SUCH ERECTION AIDS SHALL BE REMOVED FROM THE COMPLETED STRUCTURE IF DIRECTED BY THE OWNER'S REPRESENTATIVE.

6) ALL EXTENSION BARS, RUN-OFF PLATES, AND BACKING BARS USED IN WELDED CONNECTIONS SHALL BE REMOVED AND THE JOINTS SHALL BE GROUND SMOOTH WHERE SUCH CONNECTION IS PERMANENTLY EXPOSED TO VIEW OR IS DESIGNATED AS ARCHITECTURALLY EXPOSED STRUCTURAL STEEL.

7) HEADED STUDS AND DEFORMED BAR ANCHORS
A) ALL HEADED STUDS AND DEFORMED BAR ANCHORS SHALL BE INSTALLED USING AUTOMATIC END-WELDING EQUIPMENT RECOMMENDED BY THE STUD OR ANCHOR MANUFACTURER. MANUAL WELDING OF HEADED STUDS OR DEFORMED BAR ANCHORS WILL NOT BE ALLOWED.
B) IF A VISUAL INSPECTION REVEALS ANY STUD THAT DOES NOT SHOW A FULL 360-DEGREE FLASH OR ANY STUD THAT HAS BEEN REPAIRED BY MANUAL WELDING, SUCH STUD SHALL BE BENT TO AN ANGLE APPROXIMATELY 15-DEGREES FROM ITS ORIGINAL AXIS. THE DIRECTION OF BENDING FOR STUDS WITH LESS THAN A 360-DEGREE FLASH SHALL BE OPPOSITE TO THE MISSING PORTION OF THE FLASH.
C) HEADED STUDS AND DEFORMED BAR ANCHORS THAT HAVE SUCCESSFULLY PASSED THE BEND TEST WITHOUT SIGN OF FAILURE SHALL BE ACCEPTABLE FOR USE AND LEFT IN THE BENT POSITION UNLESS DIRECTED OTHERWISE BY THE ENGINEER.
D) WELDED STUDS NOT CONFORMING TO THE REQUIREMENTS OF THE AWS D1.1 "STRUCTURAL WELDING CODE - STEEL" SHALL BE REPAIRED OR REPLACED BY THE CONTRACTOR. THE CONTRACTOR SHALL REVISE THE WELDING PROCEDURE AS NECESSARY TO ENSURE THAT SUBSEQUENT STUD WELDING WILL MEET AWS D1.1 REQUIREMENTS.

8) STEEL EMBEDMENTS IN CONCRETE:
A) ALL STEEL COMPONENTS TO BE EMBEDDED IN CONCRETE SHALL HAVE COATINGS AS DEFINED IN THE TABLE BELOW.

COATINGS FOR STEEL EMBEDMENTS IN CONCRETE		
EXPOSURE	FIELD WELDING	FINISH
EXTERIOR	EITHER	GALVANIZED
INTERIOR	YES	UNPAINTED
	NO	GALVANIZED

FOOTNOTES:

1. ALL WELDING TO PREVIOUSLY GALVANIZED COMPONENTS WILL REQUIRE REMOVAL OF THE GALVANIZING WITH GRINDING FOR AT LEAST 3-INCHES FROM EITHER SIDE OF THE INTENDED WELD AND ON BOTH SIDES OF THE WORKPIECE.

2. FIELD WELDED AREAS AND OTHER AREAS WITH REMOVAL OF, OR DAMAGE TO, THE GALVANIZED COATING SHALL HAVE THEIR COATING RESTORED IN ACCORDANCE TO ASTM A780, USING PAINT CONTAINING ZINC DUST OR SIMILAR PERMITTED PRODUCTS CAPABLE OF PROVIDING A MINIMUM ZINC-RICH COATING THICKNESS OF 2.0 MILS IN A SINGLE APPLICATION.

B) IN ORDER TO REDUCE THE RISK OF HEAT-INDUCED CONCRETE SPALLING AT FIELD-WELDED EMBED PLATES:
i) ALLOW SUPPORTING CONCRETE TO CURE FOR A MINIMUM OF 14-DAYS PRIOR TO FIELD WELDING.
ii) PROVIDE THE WELD SIZE SHOWN IN DETAILS AND DO NOT OVER-WELD.

1) SHOP PRIMER
A) ALL STEEL EXPOSED TO EXTERIOR WEATHER OR AN UNCONTROLLED ENVIRONMENT SHALL BE BLAST CLEANED AND PRIMED WITH A SUBMITTED AND APPROVED ZINC-RICH PRIMER.
B) INTERIOR STEEL SHALL BE SHOP PRIMED WITH THE FABRICATORS STANDARD SHOP PRIMER.
C) SHOP PRIMER SHALL NOT BE APPLIED TO THE FOLLOWING AREAS:
iii) SURFACES EMBEDDED IN CONCRETE OR MORTAR. EXTEND PRIMING OF PARTIALLY EMBEDDED MEMBERS TO A DEPTH OF 2 INCHES.
iv) SURFACES TO BE FIELD WELDED.
v) SURFACES TO BE HIGH-STRENGTH BOLTED WITH SLIP-CRITICAL CONNECTIONS.
vi) SURFACES TO RECEIVE SPRAYED FIRE-RESISTIVE MATERIALS.
vii) GALVANIZED SURFACES.

E. STEEL MISCELLANEOUS:

1) ALL EDGE ANGLES SUPPORTING ROOF OR FLOOR DECK SHALL BE CONTINUOUS BUTT-SPLICE WELDED OVER SUPPORTS.

2) ALL ELEVATED MECHANICAL EQUIPMENT SHALL BE SUPPORTED BY STEEL FRAMING. IF SPECIFIC FRAMING SIZES ARE NOT PROVIDED ON THE FRAMING PLAN, REFER TYPICAL DETAILS FOR ROOF AND FLOOR OPENING FRAME DETAILS.

3) SUBSTITUTION OF POST-INSTALLED ANCHORS FOR EMBEDDED ANCHORS SHOWN ON THE DRAWINGS WILL NOT BE PERMITTED UNLESS SPECIFICALLY APPROVED IN WRITING BY THE OWNER'S REPRESENTATIVE.

4) WHERE POST-INSTALLED ANCHORS ARE USED IN CONTINUOUS ANGLES, FABRICATE ANGLE WITH OPTIONAL HOLE LOCATIONS TO ALLOW REMEDIATION OF CASES WHERE ANCHORS FOUL WITH REBAR. AS AN EXAMPLE, FOR A CONTINUOUS ANGLE WITH ANCHORS AT 24" ON CENTER, PROVIDE HOLES AT 6" ON CENTER.

5) GALVANIZED LOOSE LEDGE ANGLES SHALL BE PROVIDED OVER ALL MASONRY VENEER OPENINGS OR RECESSES DEEPER THAN 1". LINTELS SHALL HAVE 1" OF BEARING AT EACH END FOR EVERY FOOT OF SPAN, WITH A MINIMUM OF 4" AND SIZED AS FOLLOWS UNLESS SHOWN OTHERWISE IN THE DRAWINGS.
A) UP TO 4'-0".....L3-1/2 x 3-1/2 x 3/8
B) 4'-1" to 5'-0".....L4 x 3-1/2 x 3/8 (LLV)
C) 5'-1" to 6'-6".....L5 x 3-1/2 x 3/8 (LLV)
D) 6'-7" to 8'-0".....L6 x 3-1/2 x 3/8 (LLV)

12. STEEL JOIST AND BRIDGING NOTES

A. COORDINATION BY GENERAL CONTRACTOR:

1) THE GENERAL CONTRACTOR SHALL CONFIRM OR REVISE MECHANICAL EQUIPMENT SIZE AND WEIGHT AND PROVIDE THE JOIST MANUFACTURER THE POINT LOADS FOR WHICH SPECIAL JOISTS ARE TO BE DESIGNED. PRELIMINARY ROOF TOP UNIT (RTU) WEIGHTS ARE SHOWN ON THE ROOF PLANS. SHOULD WEIGHTS EXCEED THOSE SHOWN, CONTRACTOR SHALL CONTACT THE OWNER'S REPRESENTATIVE FOR REVIEW.

B. JOIST DESIGN BY MANUFACTURER

1) AS A MINIMUM REQUIREMENT, THE JOIST MANUFACTURER SHALL DESIGN ALL JOISTS FOR THE DESIGN LOADS SPECIFIED IN THE STEEL JOIST INSTITUTE'S LOAD TABLES. IN ADDITION, JOISTS SHALL BE DESIGNED TO CARRY ANY OTHER LOADS INDICATED ON THE DRAWINGS, INCLUDING BUT NOT LIMITED TO, EQUIPMENT AND/OR PIPING SUPPORTED ON OR SUSPENDED FROM THE ROOF STRUCTURE.

2) UNLESS SHOWN OTHERWISE IN THE DRAWINGS, JOISTS SHALL BE DESIGNED BY THE JOIST MANUFACTURER FOR A NET UPLIFT OF 10 PSF IN THE FIELD OF THE ROOF AND 15 PSF WITHIN 10 FEET OF ROOF EDGES.

3) BETWEEN PANEL POINTS OF STEEL JOISTS THE CHORD MEMBERS SHALL BE DESIGNED TO SUPPORT 100 LBS VERTICAL LOAD WITHOUT REINFORCEMENT OF THE JOIST. TYPICALLY, UNDERHUNG LOADS SHALL BE SUPPORTED AT JOIST PANEL POINTS. OFF-PANEL POINT LOADING IN EXCESS OF 100 POUNDS WILL REQUIRE JOIST REINFORCING. REFER TYPICAL DETAILS FOR JOIST REINFORCING DETAIL.

4) UNLESS MORE STRINGENT PROVISIONS ARE SHOWN IN THE CONTRACT DOCUMENTS, THE JOIST MANUFACTURER SHALL DESIGN ALL JOISTS FOR A MAXIMUM LIVE LOAD DEFLECTION OF L/360.

5) JOISTS SEATS SHALL HAVE STANDARD JOIST SEAT DEPTHS UNLESS NOTED OTHERWISE. HOWEVER, FLAT BEARING SEATS SHALL BE PROVIDED FOR ALL JOISTS BY INCREASING THE DEPTH OF THE SEAT AT THE HIGH END OF SLOPED JOISTS. CONTRACTOR SHALL VERIFY FINAL SEAT DEPTHS PRIOR TO DETAILING SUPPORTING STRUCTURE. STANDARD JOIST SEAT DEPTHS ARE AS FOLLOWS:
A) K-SERIES: 2-1/2"

6) BOTTOM CHORDS ON ALL JOISTS SHALL BE EXTENDED TO RECEIVE CEILING OR POTENTIAL FUTURE CEILING.

7) IN STEEL FRAMES, WHERE COLUMNS ARE NOT FRAMED IN AT LEAST TWO DIRECTIONS WITH SOLID WEB STRUCTURAL STEEL MEMBERS, STEEL JOISTS SHALL BE FIELD-BOLTED TO THE COLUMNS TO PROVIDE LATERAL STABILITY TO THE COLUMNS DURING ERECTION AND BOTTOM CHORD STABILITY PLATES SHALL BE PROVIDED AS REQUIRED BY OSHA SAFETY STANDARDS.

C. JOIST BRIDGING

1) JOIST BRIDGING SHOWN ON FRAMING PLANS IS PRELIMINARY AND SHALL NOT BE USED AS THE BASIS FOR BID OR FOR ERECTION. ALL JOIST BRIDGING SHALL BE DESIGNED BY THE JOIST MANUFACTURER TO MEET OR EXCEED THE MINIMUM REQUIREMENTS OF THE SJI "STANDARD SPECIFICATION FOR K-SERIES, LH-SERIES, AND DLH SERIES OPEN WEB STEEL JOISTS AND FOR JOIST GIRDERS", AND ALL OSHA PROVISIONS REGARDING JOIST ERECTION.

2) ADDITIONAL BRIDGING LINES AT THE BOTTOM CHORD OUTSIDE PANEL POINT HAVE NOT BEEN SHOWN FOR CLARITY BUT ARE REQUIRED FOR THE SUPPORT OF UPLIFT LOADS. PROVIDE AS DESIGNED BY THE JOIST MANUFACTURER.

3) NO VERTICAL LOAD SHALL BE IMPOSED ON BRIDGING.

4) HORIZONTAL BRIDGING ANGLES FOR TOP AND BOTTOM CHORDS OF JOISTS ARE SHOWN ON FRAMING PLANS THUS: - - - - -

5) DIAGONAL BRIDGING IS SHOWN AS AN "X" ALONG A LINE OF HORIZONTAL BRIDGING. DIAGONAL BRIDGING SHALL BE PROVIDED WHERE SHOWN AND AT ANY DISCONTINUITIES IN THE ROW OF BRIDGING.

6) ALL BRIDGING LINES SHALL BE TERMINATED WITH AN "X" OR ANCHORED TO A STRUCTURAL WALL. REFER TYPICAL DETAILS FOR JOIST BRIDGING DETAILS.

D. JOIST ERECTION

1) ERECTION OF JOISTS SHALL FOLLOW THE STEEL JOIST INSTITUTE'S CODE OF STANDARD PRACTICE, SJI TECHNICAL DIGEST NO. 9 AND ALL APPLICABLE PROVISIONS OF OSHA SAFETY STANDARDS. JOISTS SHALL NOT BE FULLY LOADED UNTIL ALL BRIDGING LINES ARE SECURED AND METAL DECKING IS IN PLACE. THE JOIST MANUFACTURER AND ERECTOR SHALL PROVIDE ADDITIONAL BRIDGING DURING CONSTRUCTION SEQUENCING AS REQUIRED BY THE CURRENT SJI SPECIFICATIONS AND OSHA REQUIREMENTS.

2) NO LOAD APPLIED TO JOIST SHALL BE DONE IN A MANNER THAT EXCEEDS THE MOMENT OR SHEAR CAPACITY OF THE JOIST.

3) ANY HANGERS SUPPORTED FROM JOISTS SHALL BE CONNECTED WITHOUT FIELD WELDING OR DRILLING TO THE JOIST.

13. METAL DECK NOTES:

A. ROOF DECK:

1) BASIS OF DESIGN: VULCRAFT TYPE 1.5B WIDE RIB DECK WITH THE CHARACTERISTICS AND STRUCTURAL PROPERTIES OUTLINED BELOW. WIDE RIB DECKS OF OTHER MANUFACTURERS ARE ACCEPTABLE IF THEY PROVIDE SIMILAR LOAD-CARRYING CAPACITY FOR THE DECK SPANS APPLICABLE TO THIS PROJECT.
A) SDI DECK TYPE: WIDE RIB (WR)
B) DEPTH: 1-1/2 IN.
C) THICKNESS: 20 GAGE
D) FINISH: GALVANIZED
E) I = 0.201 IN4/FT
F) Sp = 0.234 IN3/FT
G) Sn = 0.247 IN3/FT
H) Fy = 33 KSI
I) SIDE LAPS: OVERLAPPED

2) SUPPORT FASTENERS: ROOF DECK SHALL BE CONNECTED TO SUPPORTS WITH #12 MECHANICAL FASTENERS AT 12" O.C. (36/4 PATTERN).
A) FASTENERS SHALL PENETRATE ALL PLIES OF DECKING INTO SUPPORTING SUBSTRATE OR 2 LINES OF FASTENERS SHALL BE PROVIDED.
B) #12 MECHANICAL FASTENERS ARE CAPABLE OF SELF-TAPPING INTO A 1/2-INCH MAXIMUM SUPPORTING STEEL THICKNESS. IF SUPPORTING STEEL THICKNESS EXCEEDS 1/2-INCH OR IF SUPPORT IS AN EMBED PLATE, PROVIDE (1) 5/8-INCH DIAMETER PUDDLE WELD IN LIEU OF EACH #12 FASTENER.

3) SIDE LAP FASTENERS: ROOF DECK SIDE LAPS SHALL BE FASTENED WITH #10 SIDE LAP FASTENERS AT 12" ON CENTER.

4) MINIMUM BEARING LENGTH AND LAP LENGTH: MINIMUM BEARING LENGTH ON SUPPORTS AT DISCONTINUOUS ENDS OF ROOF DECK IS 2-INCHES. MINIMUM BEARING LENGTH AND LAP LENGTH OF CONTINUOUS ROOF DECK OVER INTERIOR SUPPORTS IS 3-INCHES.

B. SUBSTITUTION OF WELDING OR PINS FOR MECHANICAL SCREW ANCHORS WILL NOT BE PERMITTED.

C. SUPPORTS FOR DECKING ARE DEFINED AS MEMBERS PROVIDING DIRECT TRANSVERSE SUPPORT AS WELL AS CONTINUOUS PARALLEL EDGE SUPPORT.

D. ALL DECKING SHALL BE PLACED WITH RIBS PERPENDICULAR TO SUPPORTING ROOF OR FLOOR MEMBERS AND SHALL SPAN A MINIMUM OF 3 SPANS UNLESS SHOWN OTHERWISE IN STRUCTURAL DRAWINGS.

E. METAL DECKING SHALL NOT BE USED TO SUPPORT ANY HANGING LOADS INCLUDING, BUT NOT LIMITED TO, SUSPENDED MECHANICAL, ELECTRICAL, OR PLUMBING EQUIPMENT, CABLE TRAYS OR RACEWAYS, CEILING FINISHES OR CEILING FRAMING.

F. ALL DECK OPENINGS UP TO 8-IN. SHALL BE REINFORCED WITH A MINIMUM 16-GAGE PLATE AS SHOWN IN TYPICAL ROOF DECK REINFORCING DETAIL.

G. ALL DECK OPENINGS GREATER THAN 8-IN. SHALL BE SUPPORTED BY AN ANGLE FRAME. IF SPECIFIC FRAMING SIZES ARE NOT PROVIDED ON THE FRAMING PLAN, REFER TYPICAL DETAILS FOR ROOF OPENING FRAME DETAIL.

H. PROVIDE SHEET STEEL COLUMN CLOSURES, Z-CLOSURES, CELL CLOSURES, POUR STOPS AND GIRDER FILLERS OF SAME MATERIAL AND FINISH AS DECK WITH THICKNESS AND PROFILE RECOMMENDED IN SDI FLOOR DECK DESIGN MANUAL, SECOND EDITION (JUNE 2020). WELD TO SUPPORTING STRUCTURE ACCORDING TO SDI RECOMMENDATIONS AND AS CONCEPTUALLY SHOWN IN TYPICAL FLOOR DECK CLOSURE DETAILS.

I. ALL FLOOR DECK EDGES SHALL BE SUPPORTED WITH POUR STOPS OR BENT PLATES. IF BENT PLATES ARE NOT SHOWN IN THE STRUCTURAL DRAWINGS, PROVIDE GAGE METAL POUR STOPS COMPLYING WITH SDI FLOOR DECK DESIGN MANUAL, SECOND EDITION (JUNE 2020), SECTION 5, TABLE 11 AND AS SHOWN IN TYPICAL DETAILS.

AGP
the Abla Griffin Partnership L.L.C.
201 N. BROADWAY
SUITE 210
MOORE, OK. 73160
405.735.3477
AGP@theAGP.net
www.theAGP.net

CEDAR CREEK
CIVIL

KFC ENGINEERING
STRUCTURAL

SALAS O'BRIEN
MECHANICAL / ELECTRICAL

CJC
drawn by

BWB
checked by

JULY 2023
date

revisions

MOORE PUBLIC SCHOOLS
BOARD OF EDUCATION
MOORE, OKLAHOMA

MOORE Public Schools
LEARNING FOR LIFE

CLASSROOM ADDITION
HIGHLAND WEST
JUNIOR HIGH SCHOOL

sheet no:

S102

KFC engineering
Kirkpatrick Forest Curtis PC
Structural Engineering
OK CA #3888, EXP. 06/30/25
525 Central Park Drive, Suite 202
Oklahoma City, OK 73105
405.528.4596 | kfcengr.com

OWNERSHIP USE OF DOCUMENTS:

AGP EXPRESSLY RESERVES ITS COPYRIGHT AND OTHER PROPERTY RIGHTS OF ALL PLANS AND DRAWINGS DESIGNED AND/OR PRODUCED. PLANS AND DRAWINGS ARE NOT TO BE REPRODUCED IN ANY FORM OR MANNER WITHOUT THE EXPRESSED WRITTEN CONSENT OF AGP.

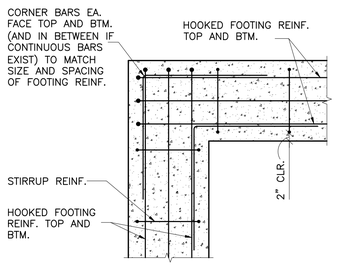

1 TYP. FOOTING CORNER REINF.
SCALE: NONE

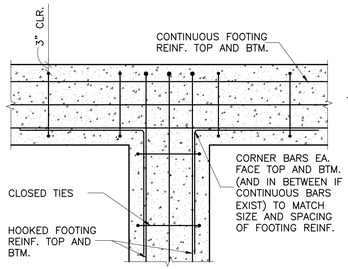

2 TYP. FOOTING TEE REINF.
SCALE: NONE

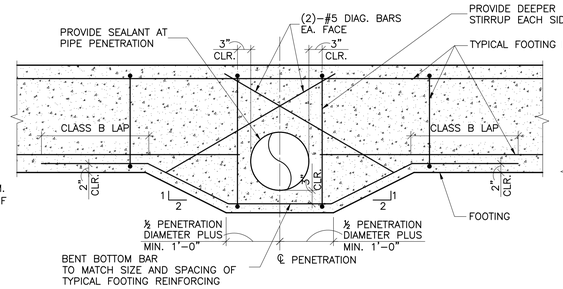

3 TYP. FOOTING PENETRATION
SCALE: NONE

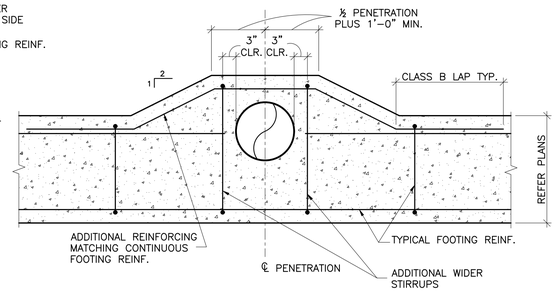

4 PLAN SECTION AT TYPICAL VERTICAL PENETRATION
SCALE: NONE

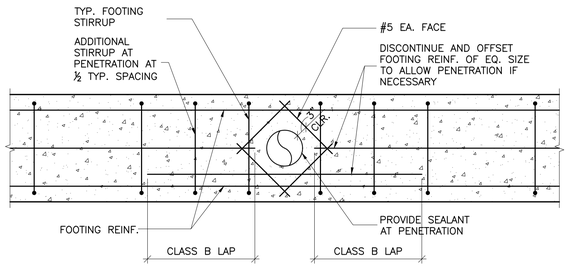

5 FOOTING PENETRATION
SCALE: NONE

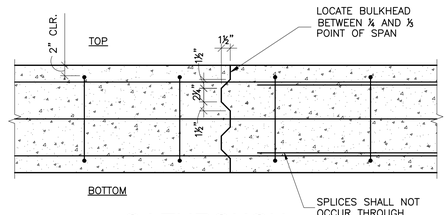

6 CJ THROUGH FOOTING
SCALE: NONE

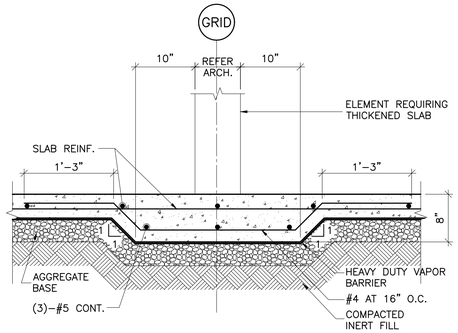

7 TYP. THICKENED SLAB
SCALE: NONE

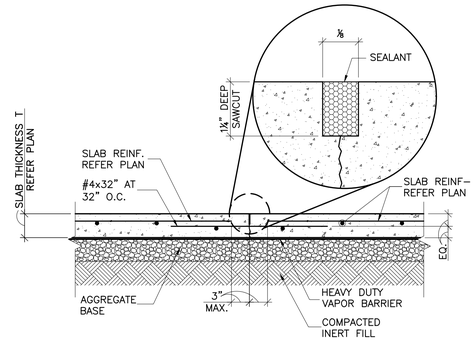

8 TYP. SAWED JOINT (SJ)
SCALE: NONE

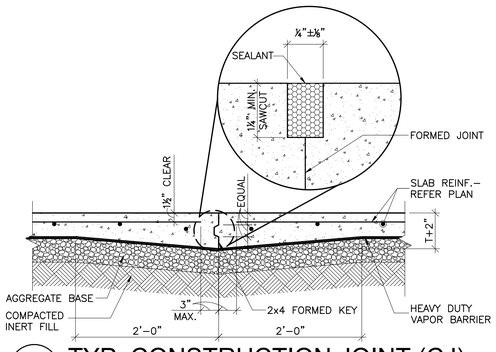

9 TYP. CONSTRUCTION JOINT (CJ)
SCALE: NONE

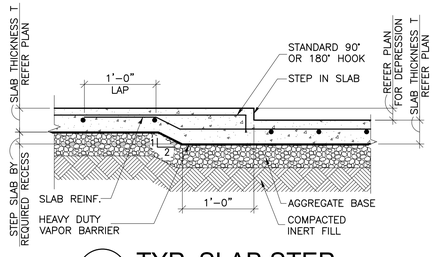

10 TYP. SLAB STEP
SCALE: NONE

CONCRETE EXPOSURE	MEMBER	REINFORCEMENTS	SPECIFIED COVER, IN.
CAST AGAINST AND PERMANENTLY IN CONTACT WITH GROUND	ALL	ALL	3
EXPOSED TO WEATHER OR IN CONTACT WITH GROUND	ALL	NO. 6 THROUGH NO. 18 BAR	2
		NO. 5 BAR, W31 OR D31 WIRE, AND SMALLER	1–1/2
NOT EXPOSED TO WEATHER OR IN CONTACT WITH GROUND	SLAB, JOISTS, AND WALLS	NO. 14 AND NO. 18 AND SMALLER	1–1/2
		NO. 11 BAR AND SMALLER	3/4
	BEAMS, COLUMNS, PEDESTALS, AND TENSION TIES	PRIMARY REINFORCEMENT, STIRRUPS, TIES, SPIRALS, AND HOOPS	1–1/2

11 TYP. MIN. CONCRETE COVER
SCALE: NONE

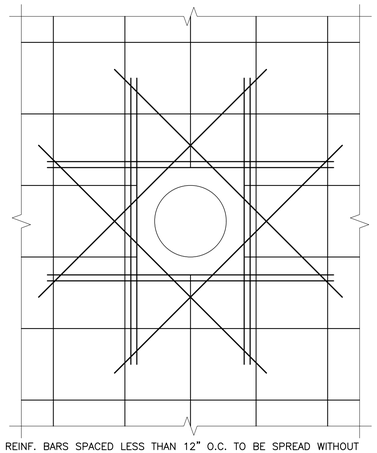

REINF. BARS SPACED LESS THAN 12" O.C. TO BE SPREAD WITHOUT INTERRUPTION TO CLEAR PENETRATIONS LESS THAN 12" DIAM.
SIZE OF DIAGONAL AND EXTRA PARALLEL BARS TO EQUAL SIZE OF TYPICAL SLAB OR WALL REINFORCING BARS.
SEE DESIGN DRAWINGS FOR DIAMETER AND LOCATION OF PENETRATIONS
NUMBER OF EXTRA PARALLEL BARS PLACED EACH WAY AROUND PENETRATION TO BE EQUAL TO NUMBER OF BARS INTERRUPTED.
(TYPICAL FOR EACH FACE OF SLAB OR WALL). MINIMUM OF ONE BAR EACH WAY, EACH FACE OF SLAB OR WALL
FOR PENETRATIONS LESS THAN 12"ø, PROVIDE 4–#4x4'–0" DIAGONAL BARS EACH FACE.

12 TYP. PENETRATION THRU CONC. SLAB OR WALL
SCALE: 12

TENSION DEVELOPMENT AND LAP–SPLICE LENGTHS FOR UNCOATED REINFORCING BARS

BAR SIZE	LAP CLASS	LENGTHS (IN.) PER CONCRETE STRENGTH f'c=3500 psi (NORMAL WEIGHT) TOP BARS CASE 1	TOP BARS CASE 2	OTHER BARS CASE 1	OTHER BARS CASE 2
#3	A	20	30	16	23
	B	26	39	20	30
#4	A	27	40	21	31
	B	35	52	27	40
#5	A	33	50	26	39
	B	43	65	33	50
#6	A	40	60	31	46
	B	52	78	40	60
#7	A	58	87	45	67
	B	75	113	58	87
#8	A	66	99	51	77
	B	86	129	66	99
#9	A	75	112	58	86
	B	97	145	75	112
#10	A	84	126	65	97
	B	109	164	84	126
#11	A	93	140	72	108
	B	121	182	93	140
#14	N/A	112	168	86	129
#18	N/A	149	224	115	172

TENSION DEVELOPMENT AND LAP–SPLICE LENGTHS FOR UNCOATED REINFORCING BARS

BAR SIZE	LAP CLASS	LENGTHS (IN.) PER CONCRETE STRENGTH f'c=4000 psi (NORMAL WEIGHT) TOP BARS CASE 1	TOP BARS CASE 2	OTHER BARS CASE 1	OTHER BARS CASE 2
#3	A	19	28	15	22
	B	24	36	19	28
#4	A	25	37	19	29
	B	32	48	25	37
#5	A	31	47	24	36
	B	40	60	31	47
#6	A	37	56	29	43
	B	48	72	37	56
#7	A	54	81	42	63
	B	70	106	54	81
#8	A	62	93	48	71
	B	80	121	62	93
#9	A	70	105	54	81
	B	91	136	70	105
#10	A	79	118	61	91
	B	102	153	79	118
#11	A	87	131	67	101
	B	113	170	87	131
#14	N/A	105	157	81	121
#18	N/A	139	209	107	161

NOTES: 1 in.=25.4 mm.
1. TABULATED VALUES ARE BASED ON GRADE 60 REINFORCING BARS AND NORMAL WEIGHT CONCRETE. LENGTHS ARE IN INCHES.
2. TENSION DEVELOPMENT LENGTHS AND TENSION LAP–SPLICE LENGTHS ARE CALCULATED PER ACI 318, SECTIONS 25.4.2.2 AND 25.5.2.1, RESPECTIVELY. TABULATED VALUES FOR BEAMS OR COLUMNS ARE BASED ON TRANSVERSE REINFORCEMENT AND CONCRETE COVER MEETING MINIMUM CODE REQUIREMENTS.
3. CASES 1 AND 2, WHICH DEPEND ON THE TYPE OF STRUCTURAL ELEMENT, CONCRETE COVER, AND CENTER–TO–CENTER SPACING OF THE BARS, ARE DEFINED AS: BEAMS OR COLUMNS: CASE 1–COVER AT LEAST $1.0d_b$ AND CENTER–TO–CENTER SPACING AT LEAST $2.0d_b$ AND CASE 2–COVER LESS THAN $1.0d_b$ OR CENTER–TO–CENTER SPACING LESS THAN $2.0d_b$. ALL OTHERS: CASE 1–COVER AT LEAST $1.0d_b$ AND CENTER–TO–CENTER SPACING AT LEAST $3.0d_b$. CASE 2–COVER LESS THAN $1.0d_b$ OR CENTER–TO–CENTER SPACING LESS THAN $3.0d_b$.
4. LAP SPLICE LENGTHS ARE MULTIPLES OF TENSION DEVELOPMENT LENGTHS; CLASS A=$1.0l_d$ AND CLASS B=$1.3l_d$ (ACI 318, SECTION 25.5.2.1).
5. ACI 318 DOES NOT ALLOW TENSION LAP SPLICES OF #14 OR #18 BARS. THE TABULATED VALUES FOR THOSE BAR SIZES ARE THE TENSION DEVELOPMENT LENGTHS.
6. TOP BARS ARE HORIZONTAL BARS WITH MORE THAN 12 in. OF CONCRETE CAST BELOW THE BARS.
7. FOR LIGHTWEIGHT–AGGREGATE CONCRETE, MULTIPLY THE TABULATED VALUES BY 1.3.

13 REINFORCING LAP LENGTHS
SCALE: NONE

AGP
the Abla Griffin Partnership L.L.C.
201 N. BROADWAY
SUITE 210
MOORE, OK. 73160
405.735.3477
AGP@theAGP.net
www.theAGP.net

CEDAR CREEK
CIVIL

KFC ENGINEERING
STRUCTURAL

SALAS O'BRIEN
MECHANICAL / ELECTRICAL

PROFESSIONAL STRUCTURAL ENGINEER
BRANDON W. BIRCH
26145
OKLAHOMA
6/30/2023

CJC
drawn by

BWB
checked by

JULY 2023
date

revisions

MOORE PUBLIC SCHOOLS
BOARD OF EDUCATION
MOORE, OKLAHOMA

MOORE Public Schools
LEARNING FOR LIFE

CLASSROOM ADDITION
HIGHLAND WEST
JUNIOR HIGH SCHOOL

sheet no:

S103

KFC engineering
Kirkpatrick Forest Curtis PC
Structural Engineering
OK CA #3888, EXP. 06/30/25
525 Central Park Drive, Suite 202
Oklahoma City, OK 73105
405.528.4596 | kfcengr.com

OWNERSHIP USE OF DOCUMENTS:

AGP EXPRESSLY RESERVES ITS COPYRIGHT AND OTHER PROPERTY RIGHTS OF ALL PLANS AND DRAWINGS DESIGNED AND/OR PRODUCED. PLANS AND DRAWINGS ARE NOT TO BE REPRODUCED IN ANY FORM OR MANNER WITHOUT THE EXPRESSED WRITTEN CONSENT OF AGP.

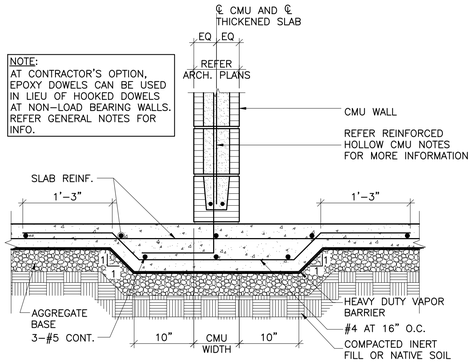

1 THICKENED SLAB AT CMU
SCALE: NONE

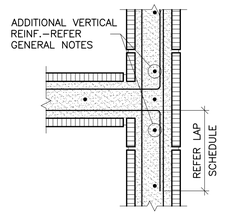

2 DETAIL AT BOND BEAM CORNER W/ NO CONTROL JT
SCALE: NONE

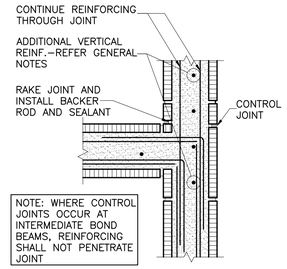

3 DETAIL AT FLOOR/ROOF BOND BEAM CORNER W/ CONTROL JT
SCALE: NONE

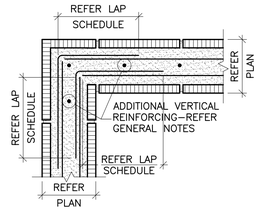

4 CORNER BOND BEAM WITH NO CONTROL JT
SCALE: NONE

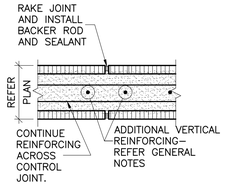

5 CONTROL JT AT FLOOR/ROOF BOND BEAM
SCALE: NONE

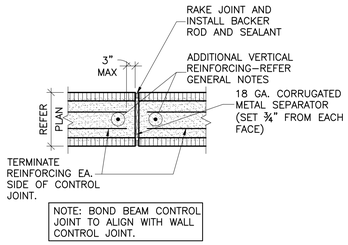

6 CONTROL JT AT INTERMEDIATE BOND BEAM
SCALE: NONE

LENGTH (in.)				
BAR SIZE	CENTER			EDGE (2 IN CLEAR COVER)
	6" CMU	8" CMU	12" CMU	6", 8", 12" CMU
3	1'-0"	1'-0"	1'-0"	1'-6"
4	1'-6"	1'-6"	1'-0"	2'-0"
5	2'-6"	2'-0"	1'-6"	3'-0"
6	**	3'-6"	2'-0"	**
7	**	**	3'-0"	**
8	**	**	**	**

7 CMU REINFORCING LAP SCHEDULE
SCALE: NONE

NOTES:
1. f'm= 2000 psi
2. fy= 60,000 psi
*SCHEDULE ALSO APPLIES TO EMBEDMENT LENGTHS
**MECHANICAL SPLICES SHALL BE USED

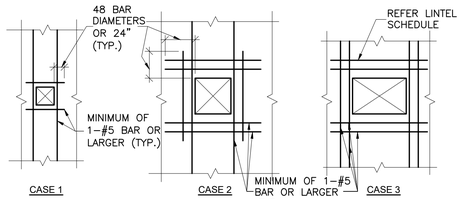

CASE 1 APPLIES TO: ALL OPENINGS 2 FEET OR LESS BOTH WAYS.

CASE 2 APPLIES TO: ALL OPENINGS EXCEEDING 2 FEET BUT NOT MORE THAN 4 FEET BOTH WAYS, WHERE NO LINTEL IS INDICATED

CASE 3 APPLIES TO: ALL OPENINGS EXCEEDING 4 FEET AND WIDER

NOTE: 1.) WHERE VERTICAL REINFORCING CONSISTS OF 2 BARS OR MORE EACH BAR SHALL BE PLACED IN A SEPARATE CELL
2.) WHERE OPENING IS SUPPORTED BY A PERPENDICULAR WALL AND ONLY 8" OF WALL EXTENDS BEYOND THE OPENING, HOOK LINTEL AND SILL REINFORCING 90°

8 REINFORCING AROUND CMU WALL OPENING
SCALE: NONE

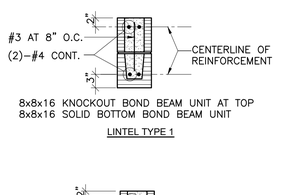

8x8x16 KNOCKOUT BOND BEAM UNIT AT TOP
8x8x16 SOLID BOTTOM BOND BEAM UNIT

LINTEL TYPE 1

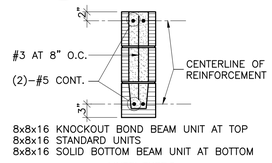

8x8x16 KNOCKOUT BOND BEAM UNIT AT TOP
8x8x16 STANDARD UNITS
8x8x16 SOLID BOTTOM BEAM UNIT AT BOTTOM

LINTEL TYPE 2

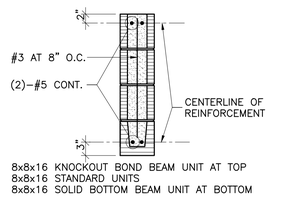

8x8x16 KNOCKOUT BOND BEAM UNIT AT TOP
8x8x16 STANDARD UNITS
8x8x16 SOLID BOTTOM BEAM UNIT AT BOTTOM

LINTEL TYPE 3

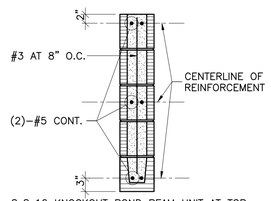

8x8x16 KNOCKOUT BOND BEAM UNIT AT TOP
8x8x16 STANDARD UNITS
8x8x16 SOLID BOTTOM BEAM UNIT AT BOTTOM

LINTEL TYPE 4

9 TYP. LINTEL TYPES
SCALE: NONE

NON-LOAD BEARING CMU LINTEL SCHEDULE	
TYPE	SPAN IN FEET
1	UP TO 4'-0"
2	4'-1" TO 6'-8"
3	6'-9" TO 9'-4"
4	9'-5" TO 12'-0"

NOTE: REFER (#) ON PLANS FOR LINTEL TYPES.

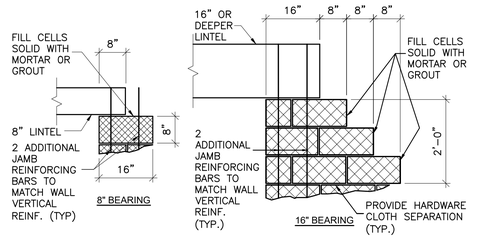

10 BEARING DETAILS TYP. LINTEL TYPES
SCALE: NONE

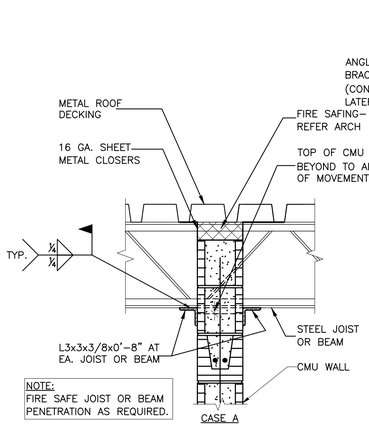

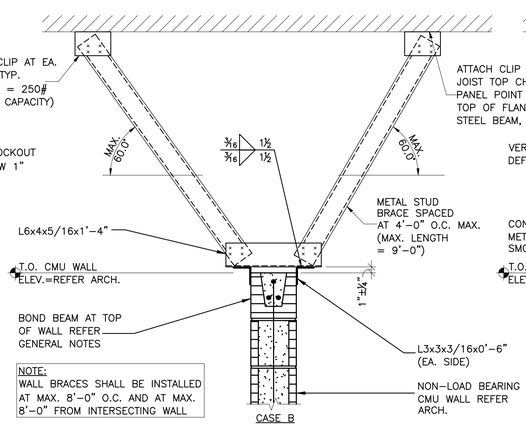

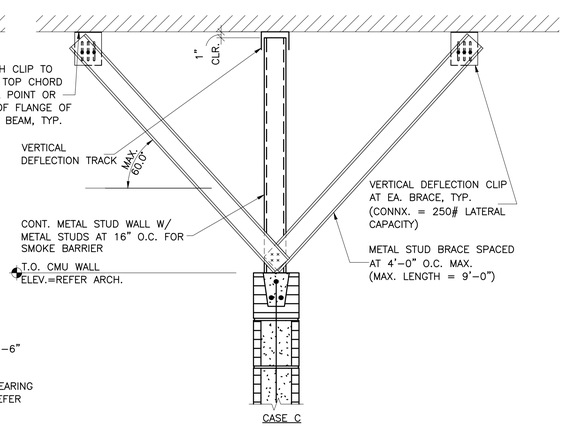

11 TYP. BRACING AT TOP OF NON-LOAD BEARING CMU
SCALE: NONE

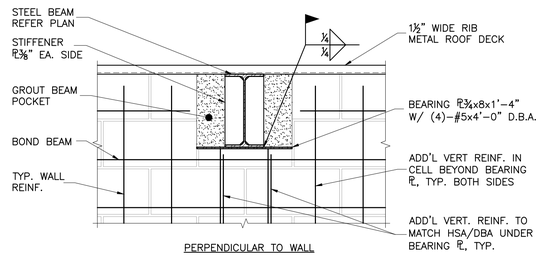

PERPENDICULAR TO WALL

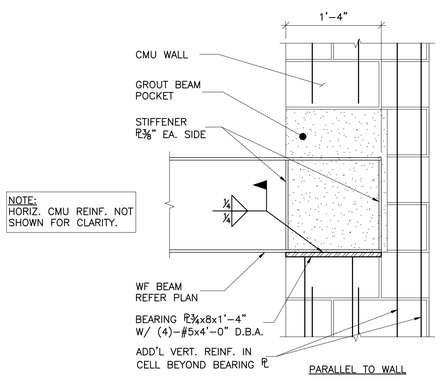

PARALLEL TO WALL

12 TYPICAL BEAM BEARING PLATE DETAILS
SCALE: NONE

AGP
the Abla Griffin Partnership L.L.C.
201 N. BROADWAY
SUITE 210
MOORE, OK. 73160
405.735.3477
AGP@theAGP.net
www.theAGP.net

CEDAR CREEK
CIVIL

KFC ENGINEERING
STRUCTURAL

SALAS O'BRIEN
MECHANICAL / ELECTRICAL

PROFESSIONAL STRUCTURAL ENGINEER
BRANDON W. BIRCH
26145
OKLAHOMA
8/4/2023

CJC
drawn by

BWB
checked by

JULY 2023
date

revisions

MOORE PUBLIC SCHOOLS
BOARD OF EDUCATION
MOORE, OKLAHOMA

MOORE Public Schools
LEARNING FOR LIFE

CLASSROOM ADDITION
HIGHLAND WEST
JUNIOR HIGH SCHOOL

sheet no:

S104

KFC engineering
Kirkpatrick Forest Curtis PC
Structural Engineering
OK CA #3888, EXP. 06/30/25
525 Central Park Drive, Suite 202
Oklahoma City, OK 73105
405.528.4596 | kfcengr.com

OWNERSHIP USE OF DOCUMENTS:

AGP EXPRESSLY RESERVES ITS COPYRIGHT AND OTHER PROPERTY RIGHTS OF ALL PLANS AND DRAWINGS DESIGNED AND/OR PRODUCED. PLANS AND DRAWINGS ARE NOT TO BE REPRODUCED IN ANY FORM OR MANNER WITHOUT THE EXPRESSED WRITTEN CONSENT OF AGP.

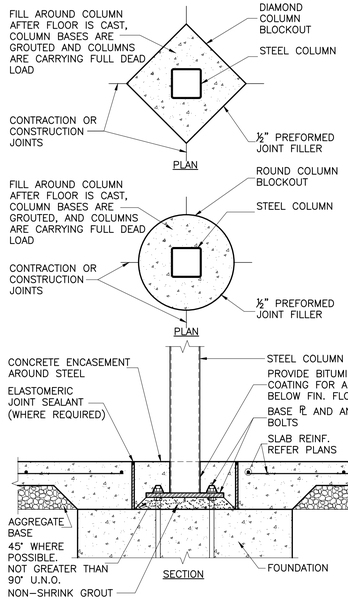

1 TYP. ISOLATION JOINT DETAILS

SCALE: NONE

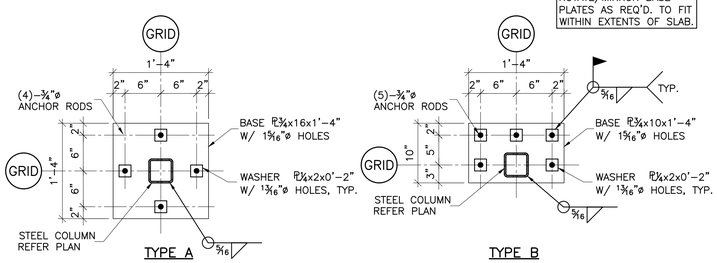

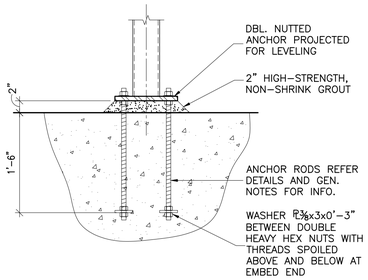

2 BASE PLATE DETAILS

SCALE: NONE

¾"ø A325-N BOLT SCHEDULE FOR SINGLE PLATE SHEAR TAB CONNECTIONS (FACTORED LOADS)	
END REACTION	NO. OF BOLTS
0 THRU 31 KIPS	2-¾ø
31 THRU 47 KIPS	3-¾ø
47 THRU 63 KIPS	4-¾ø
63 THRU 79 KIPS	5-¾ø
79 THRU 95 KIPS	6-¾ø
95 THRU 111 KIPS	7-¾ø
111 THRU 127 KIPS	8-¾ø

NOTES:
1. VALUES SHOWN ARE APPLICABLE FOR SINGLE PLATE SHEAR TAB CONNECTIONS
2. SEE PLAN FOR END REACTIONS
3. L = PLATE LENGTH ≥ T/2 OF CONNECTED BEAM.
4. AT HSS OR PIPE COLUMNS, A THROUGH-PLATE WITH EQUAL WELD ON THE BACK SIDE OF THE COLUMN IS REQUIRED UNDER EITHER OF THE FOLLOWING CIRCUMSTANCES:

   A. FOR SQUARE OR RECTANGULAR HSS:

   $$\text{WHEN } \frac{B-2.79t}{0.93t} > 35.1$$

   B. FOR ROUND HSS OR PIPE:

   $$\text{WHEN } \frac{D}{t} > \frac{3,190}{Fy}$$

   WHERE:
   B = NOMINAL COLUMN WIDTH ACROSS THE COLUMN FACE WITH THE SINGLE PLATE CONNECTION, IN.
   D = OUTSIDE DIAMETER OF ROUND HSS OR PIPE, IN.
   t = NOMINAL THICKNESS OF COLUMN,IN.
   Fy = YIELD STRENGTH OF COLUMN, KSI

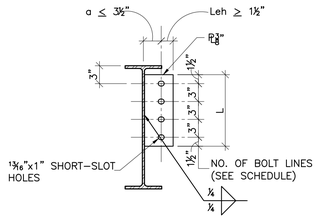

3 SINGLE PLATE SHEAR TAB CONNECTIONS (LRFD)

SCALE: NONE

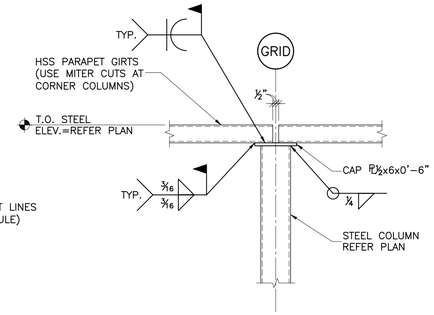

4 TYP. PARAPET GIRT TO COLUMN

SCALE: NONE

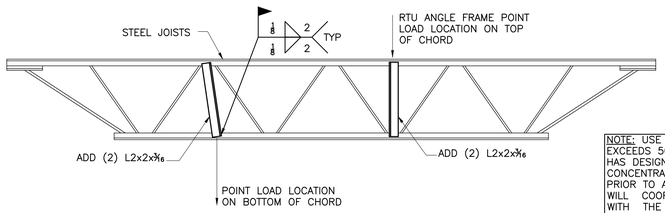

NOTE: USE THIS DETAIL WHEN POINT LOAD EXCEEDS 50 LBS. AND THE JOIST MANUFACTURER HAS DESIGNED THE JOIST FOR THE FULL CONCENTRATED LOAD. ANGLES TO BE IN PLACE PRIOR TO APPLICATION OF LOAD. CONTRACTOR WILL COORDINATE ALL SUPERIMPOSED LOADS WITH THE JOIST MANUFACTURER & ENGINEER PRIOR TO APPLICATION OF LOAD.

5 BRACING DETAIL FOR STEEL JOISTS W/ POINT LOADS

SCALE: NONE

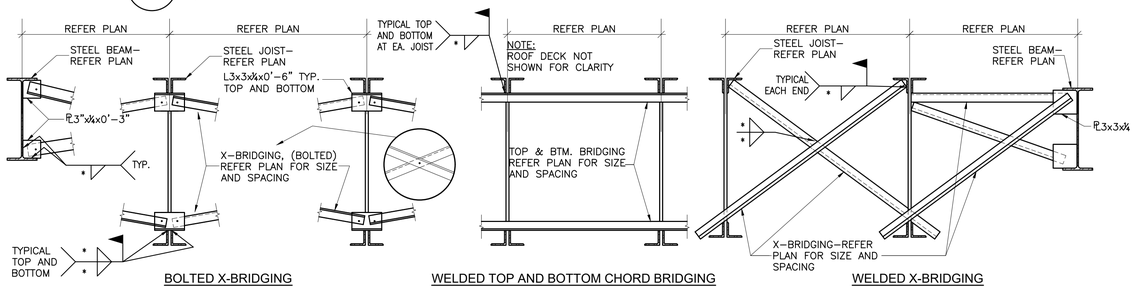

*WELD AS REQUIRED BY JOIST MANUFACTURER

6 TYP. ROOF OPENING FRAME AND MECHANICAL UNIT SUPPORT

SCALE: NONE

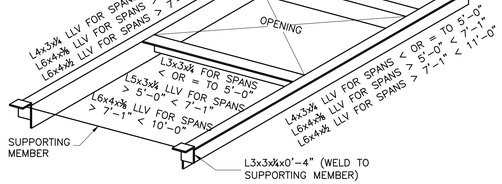

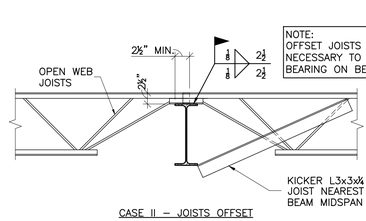

7 KICKER ANGLE AT BOTTOM FLANGE

SCALE: NONE

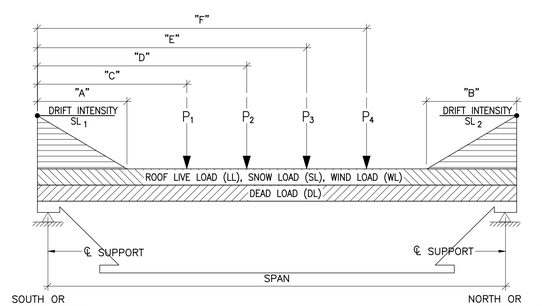

8 TYP. BRIDGING DETAILS AT JOISTS

SCALE: NONE

JOIST DESIGNATION	SPAN, FT.	UNIFORMLY DISTRIBUTED LOADS, PLF						TRAPEZOIDAL LOADS, PLF				CONCENTRATED LIVE LOADS, LBS								REMARKS
		DL	LL	SL (N.D.)	SL (W.D.)	WL (IN)	WL (OUT)	SL1	"A"	SL2	"B"	P1	"C"	P2	"D"	P3	"E"	P4	"F"	
16K4-SP1	28' - 0"	100.0	100.0	55.0	38.5	50.0	140.0	127.5	6.65			100	24'-0"							
16K4-SP2	28' - 0"	100.0	100.0	55.0	38.5	50.0	140.0			127.5	6.65	100	3'-5"							
18K4-SP3	28' - 0"	100.0	100.0	55.0	38.5	50.0	140.0			215.1	11.25	100	0'-8"	100	4'-5"					
10K1-SP4	15' - 0"	100.0	100.0	55.0	38.5	50.0	140.0					100	5'-11"	100	9'-7"					
18K4-SP5	30' - 0"	100.0	100.0	55.0	38.5	50.0	140.0			95.8	5.01	100	1'-5"	100	5'-1"	100	11'-3"	100	14'-11"	
24K4-SP6	34' - 0"	83.4	83.4	45.9	32.1	108.4	181.0					100	11'-9"	100	15'-1"	100	18'-10"	100	22'-2"	

NOTES:
1. SPANS SHOWN ARE APPROXIMATE. MANUFACTURER SHALL DETERMINE EXACT DESIGN SPANS.
2. REFER TO THE SPECIAL JOIST DIAGRAM FOR CLARIFICATION OF ALL NOMENCLATURE.
3. SL (N.D.) IS THE UNIFORM BALANCED SNOW LOAD TO BE CONSIDERED WITHOUT DRIFT LOADS.
4. SL (W.D.) IS THE UNIFORM SNOW LOAD WITH DRIFT INCLUDED.
5. JOISTS SHALL BE DESIGNED FOR ALL LOAD COMBINATIONS SPECIFIED IN THE GOVERNING BUILDING CODE. REFER GENERAL NOTES FOR THE APPLICABLE CODE.

9 SPECIAL JOIST ELEVATION

SCALE: NONE

AGP
the Abla Griffin Partnership L.L.C.
201 N. BROADWAY
SUITE 210
MOORE, OK. 73160
405.735.3477
AGP@theAGP.net
www.theAGP.net

CEDAR CREEK
CIVIL
KFC ENGINEERING
STRUCTURAL
SALAS O'BRIEN
MECHANICAL / ELECTRICAL

PROFESSIONAL STRUCTURAL ENGINEER
BRANDON W. BIRCH
26145
OKLAHOMA
6/30/2023

CJC
drawn by
BWB
checked by
JULY 2023
date
revisions

MOORE PUBLIC SCHOOLS
BOARD OF EDUCATION
MOORE, OKLAHOMA

MOORE Public Schools
LEARNING FOR LIFE

CLASSROOM ADDITION
HIGHLAND WEST
JUNIOR HIGH SCHOOL

sheet no:

S105

KFC engineering
Kirkpatrick Forest Curtis PC
Structural Engineering
OK CA #3888, EXP. 06/30/25
525 Central Park Drive, Suite 202
Oklahoma City, OK. 73105
405.528.4596 | kfcengr.com

OWNERSHIP USE OF DOCUMENTS:

AGP EXPRESSLY RESERVES ITS COPYRIGHT AND OTHER PROPERTY RIGHTS OF ALL PLANS AND DRAWINGS DESIGNED AND/OR PRODUCED. PLANS AND DRAWINGS ARE NOT TO BE REPRODUCED IN ANY FORM OR MANNER WITHOUT THE EXPRESSED WRITTEN CONSENT OF AGP.

1. STATEMENT OF SPECIAL INSPECTIONS NOTES:

A. THIS STATEMENT OF SPECIAL INSPECTIONS IS INCLUDED AS REQUIRED BY CHAPTER 17 OF 2015 INTERNATIONAL BUILDING CODE AND AISC 360.

B. SPECIAL INSPECTIONS SHALL CONFORM TO CHAPTER 17 OF THIS SHEET, SPECIFICATIONS, AISC 360, AND 2015 INTERNATIONAL BUILDING CODE. GENERAL REQUIREMENTS ARE LISTED BELOW AND IN THE ATTACHED INSPECTION TABLES.

C. REFER TO PROJECT SPECIFICATIONS FOR ADDITIONAL SPECIAL INSPECTION REQUIREMENTS. IF CONFLICTING REQUIREMENTS ARE FOUND BETWEEN STATEMENTS OF SPECIAL INSPECTIONS AND THE PROJECT SPECIFICATIONS, THE MORE STRINGENT PROVISION SHALL CONTROL UNLESS DIRECTED OTHERWISE IN WRITING BY THE STRUCTURAL ENGINEER OF RECORD.

D. THE OWNER SHALL EMPLOY ONE OR MORE SPECIAL INSPECTORS FOR THIS PROJECT. THE SPECIAL INSPECTOR SHALL BE A QUALIFIED PERSON WHO SHALL DEMONSTRATE COMPETENCE, TO THE SATISFACTION OF THE BUILDING OFFICIAL, FOR THE INSPECTION OF THE PARTICULAR TYPE OF CONSTRUCTION OR OPERATION REQUIRING SPECIAL INSPECTION.

E. THE SPECIAL INSPECTOR SHALL PROVIDE WRITTEN DOCUMENTATION TO THE BUILDING OFFICIAL DEMONSTRATING HIS OR HER COMPETENCE AND RELEVANT EXPERIENCE OR TRAINING. EXPERIENCE OR TRAINING SHALL BE CONSIDERED RELEVANT WHEN THE DOCUMENTED EXPERIENCE OR TRAINING IS RELATED IN COMPLEXITY TO THE SAME TYPE OF SPECIAL INSPECTION ACTIVITIES FOR PROJECTS OF SIMILAR COMPLEXITY AND MATERIAL QUALITIES.

F. THE SPECIAL INSPECTOR SHALL PROVIDE CONTINUOUS OR PERIODIC INSPECTIONS AS SHOWN IN THE ATTACHED INSPECTION TABLES

1) CONTINUOUS INSPECTION: THE SPECIAL INSPECTOR SHALL BE PRESENT AT ALL PROCEDURAL EVENTS.
2) PERIODIC INSPECTION: THE SPECIAL INSPECTOR SHALL BE PRESENT AT THE START OF THE WORK AND PERIODIC INSPECTION IS MADE TO VERIFY PROGRESS OF WORK IS IN COMPLIANCE.

G. INSPECTION OF FABRICATORS: WHERE FABRICATION OF STRUCTURAL LOADBEARING MEMBERS AND ASSEMBLIES IS BEING PERFORMED ON THE PREMISES OF A FABRICATOR'S SHOP, SPECIAL INSPECTION OF THE FABRICATED ITEMS SHALL BE REQUIRED BY SECTION 1704.2 OF THE 2009 INTERNATIONAL BUILDING CODE AND SECTION 1704.2.5 OF THE 2015 INTERNATIONAL BUILDING CODE AND AS REQUIRED ELSEWHERE IN THE CODE.

H. FABRICATOR APPROVAL: SPECIAL INSPECTIONS REQUIRED BY SECTION 1704 ARE NOT REQUIRED WHERE THE WORK IS DONE ON THE PREMISES OF A FABRICATOR REGISTERED AND APPROVED TO PERFORM SUCH WORK WITHOUT SPECIAL INSPECTION. APPROVAL SHALL BE BASED UPON REVIEW OF THE FABRICATOR'S WRITTEN PROCEDURAL AND QUALITY CONTROL MANUALS AND PERIODIC AUDITING OF FABRICATION PRACTICES BY AN APPROVED SPECIAL INSPECTION AGENCY. AT COMPLETION OF FABRICATION, THE APPROVED FABRICATOR SHALL SUBMIT A CERTIFICATE OF COMPLIANCE TO THE BUILDING OFFICIAL STATING THAT THE WORK WAS PERFORMED IN ACCORDANCE WITH THE APPROVED CONSTRUCTION DOCUMENTS.

I. REPORT REQUIREMENTS: SPECIAL INSPECTORS SHALL KEEP RECORDS OF INSPECTIONS. THE SPECIAL INSPECTOR SHALL FURNISH INSPECTION REPORTS TO THE BUILDING OFFICIAL, AND TO THE REGISTERED DESIGN PROFESSIONAL IN RESPONSIBLE CHARGE. REPORTS SHALL INDICATE THAT WORK INSPECTED WAS OR WAS NOT COMPLETED IN CONFORMANCE TO APPROVED CONSTRUCTION DOCUMENTS. DISCREPANCIES SHALL BE BROUGHT TO THE IMMEDIATE ATTENTION OF THE CONTRACTOR FOR CORRECTION. IF THEY ARE NOT CORRECTED, THE DISCREPANCIES SHALL BE BROUGHT TO THE ATTENTION OF THE BUILDING OFFICIAL AND TO THE REGISTERED DESIGN PROFESSIONAL IN RESPONSIBLE CHARGE PRIOR TO THE COMPLETION OF THAT PHASE OF THE WORK. A FINAL REPORT DOCUMENTING REQUIRED SPECIAL INSPECTIONS AND CORRECTION OF ANY DISCREPANCIES NOTED IN THE INSPECTIONS SHALL BE SUBMITTED AT A POINT IN TIME AGREED UPON PRIOR TO THE START OF WORK BY THE APPLICANT AND THE BUILDING OFFICIAL.

J. THE CONTRACTOR IS RESPONSIBLE FOR PROVIDING REASONABLE NOTICE TO THE SPECIAL INSPECTOR(S) REGARDING WHEN ELEMENTS OF THE PROJECT WILL BE READY FOR EFFICIENT IMPLEMENTATION OF SPECIAL INSPECTIONS.

K. THE CONTRACTOR SHALL PROVIDE ACCESS TO THE LATEST VERSION OF ALL APPROVED PLANS AND SHOP DRAWINGS FOR THE SPECIAL INSPECTOR'S USE IN PERFORMING SPECIAL INSPECTIONS.

L. CONTRACTOR SHALL GRANT ACCESS TO OWNER'S SPECIAL INSPECTOR AS IS REASONABLY NECESSARY FOR THE PROPER PERFORMANCE OF SPECIAL INSPECTIONS.

M. SPECIAL INSPECTIONS DO NOT RELIEVE THE CONTRACTOR OF RESPONSIBILITY TO COMPLY WITH ALL REQUIREMENTS OF THE CONTRACT DOCUMENTS. CONSTRUCTION MEANS AND METHODS AND JOBSITE SAFETY ARE SOLELY THE RESPONSIBILITY OF THE CONTRACTOR.

N. STEEL QUALITY INSPECTOR QUALIFICATIONS.

1) QUALITY CONTROL INSPECTOR OF ERECTOR/FABRICATOR SHALL BE QUALIFIED TO THE SATISFACTION OF THE ERECTOR/ FABRICATOR'S QC PROGRAM AND AISC 360 SECTION N.4.1 REQUIREMENTS.
2) QUALITY ASSURANCE INSPECTOR SHALL BE QUALIFIED BY A QA AGENCY AND AISC 360 SECTION N.4.2 REQUIREMENTS.
3) NON-DESTRUCTIVE TESTING PERSONNEL, OR OTHER THAN VISUAL, SHALL BE QUALIFIED IN ACCORDANCE W/ EMPLOYER'S WRITTEN PRACTICE MEETING OR EXCEEDING REQUIREMENTS OF AWS D1.1/D1.1M AND EITHER ANST SNT-TC-1A OR ANST CP-189 REQUIREMNTS.

TABLE 1705.3
REQUIRED SPECIAL INSPECTIONS AND TESTS OF CONCRETE CONSTRUCTION

TYPE	CONTINUOUS SPECIAL INSPECTION	PERIODIC SPECIAL INSPECTION	REFERENCED STANDARD	IBC REFERENCE
1) Inspect reinforcement, including prestressing tendon, and verify placement.	-	X	ACI 318 Ch. 20, 25.2, 25.3, 26.6.1-26.6.3	1908.4
2) Reinforcing bar welding:				
a) Verify weldability of reinforcing bars other than ASTM A706;	-	X	AWS D1.4 ACI 318: 26.5.4	-
b) Inspect single-pass fillet welds, maximum 5/16"; and	-	X		
c) Inspect all other welds.	X	-		
3) Inspect anchors cast in concrete.	-	X	ACI 318:17.8.2	-
4) Inspect size, embedment, and installation of post-installed anchors.	X	-	Manuf. Requirements	
5) Verify use of required design mix.	-	X	ACI 318: Ch. 19, 26.4.3, 26.4.4	1904.1, 1904.2, 1908.2, 1908.3
6) Prior to concrete placement, fabricate specimens for strength tests, perform slump and air content tests, and determine the temperature of the concrete.	X	-	ASTM C 172 ASTM C 31 ACI 318: 26.4, 26.12	1908.10
7) Inspect concrete and shotcrete placement for proper application techniques.	X	-	ACI 318: 26.5	1908.6, 1908.7, 1908.8
8) Verify maintenance of specified curing temperature and techniques.	-	X	ACI 318: 26.5.3-26.5.5	1908.9
9) Inspect prestressed concrete for:				
a) Application of prestressing forces; and	X	-	ACI 318: 26.10	-
b) Grouting of bonded prestressing tendons.	X	-		
10) Inspect erection of precast concrete members.	-	X	ACI 318: Ch. 26.8	-
11) Verify in-situ concrete strength, prior to stressing of tendons in post-tensioned concrete and prior to removal of shores and forms from beams and structural slabs.	-	X	ACI 318: 26.11.2	-
12) Inspect formwork for shape, location and dimensions of the concrete member being formed.	-	X	ACI 318: 26.11.1.2(b)	-

TABLE 3.1.2 – QUALITY ASSURANCE
REQUIRED INSPECTIONS AND TESTS OF MASONRY CONSTRUCTION

MINIMUM TESTS

Verification of Slump flow and Visual Stability Index (VSI) as delivered to the project site in accordance with Specification Article 1.5B.1.b.3 for self-consolidation grout

Verification of f'_m and f'_{AAC} in accordance with Specification Article 1.4 B prior to construction, except where specifically exempted. At shelter walls, prisms created in the field shall be tested to verify f'm.

MINIMUM SPECIAL INSPECTIONS

INSPECTION TASK	FREQUENCY (NON-SHELTER)		FREQUENCY (SHELTER)		REFERENCE FOR CRITERIA	
	CONTINUOUS	PERIODIC	CONTINUOUS	PERIODIC	TMS 402/ACI 530/ASCE 5	TMS 602/ACI 530.1/ASCE 6
1. Verify compliance with the approved submittals.	-	X	X	-	-	Art. 1.5
2. As masonry construction begins, verify that the following are in compliance:						
a. Proportions of site-prepare mortar	-	X	-	X	-	-
b. Construction of mortar joints	-	X	-	X	-	Art. 2.1, 2.6 A
c. Grade and size of prestressing tendons and anchorages	-	X	X	-	-	Art. 2.4 B, 2.4 H
d. Location of reinforcement, connectors, and prestressing tendons and anchorages	-	X	X	-	-	Art. 3.4, 3.6 A
e. Prestressing technique	-	X	X	-	-	Art. 3.6 B
f. Properties of thin-bed mortar for AAC masonry	X[a]	X[b]	X[a]	X[b]	-	Art. 2.1 C
3. Prior to grouting, verify that the following are in compliance:						
a. Grout space	-	X	X	-	-	Art. 3.2 D, 3.2 F
b. Grade, type, and size of reinforcement and anchor bolts , and prestressing tendons and anchorages	-	X	X	-	Sec. 6.1	Art. 2.4, 3.4
c. Placement of reinforcement, connectors, and prestressing tendons and anchorages	-	X	X	-	Sec. 6.1, 6.2.1, 6.2.6, 6.2.7	Art. 3.2 E, 3.4, 3.6A
d. Proportions of site-prepared grout and prestressing grout for bonded tendons	-	X	X	-	-	Art. 2.6 B, 2.4 G.1.b
e. Construction of mortar joints	-	X	X	-	-	Art. 3.3. B
4. Verify during construction:						
a. Size and location of structural elements.	-	X	X	X	-	Art. 3.3 F
b. Type, size and location of anchors, including other details of anchorage of masonry to structural members, frames or other construction.	-	X	X	X	Sec. 1.2.1 (e), 6.1.4.3, 6.2.1	-
c. Welding of reinforcing bars.	X	-	X	-	Sec. 8.1.6.7.2, 9.3.3.4(c), 11.3.3.4(b)	-
d. Preparation, construction and protection of masonry during cold weather (temperature below 40°F) or hot weather (temperature above 90°F).	-	X	X	-	-	Art. 1.8 C, 1.8 D
e. Application and measurement of prestressing force	X	-	X	-		Art. 3.6 B
f. Placement of grout and prestressing grout for bonded tendons in compliance	X	-	X	-		Art. 3.5, 3.6 C
g. Placement of AAC masonry units and construction of thin-bed mortar joints	X[a]	X[b]	X	X		Art. 3.3 B.9, 3.3 F.1.b
5. Observe preparation of grout specimens, mortar specimens, and/or prisms	-	X	X	-	-	Art. 1.4 B.2.a.3, 1.4 B.2.b.3, 1.4 B.2.c.3, 1.4 B.3, 1.4 B.4

a. Required for the first 5000 square feet of AAC masonry.
b. Required after the first 5000 square feet of AAC masonry.

REQUIRED VERIFICATION AND INSPECTION OF STEEL CONSTRUCTION

VERIFICATION AND INSPECTION	FREQUENCY OF INSPECTION: CONTINUOUS (inspect each joint/member)	FREQUENCY OF INSPECTION: PERIODIC (inspect random joint/members)	REFERENCED STANDARD
1. Material verification of high-strength bolts, nuts and washers:			
a. Identification markings to conform to ASTM standards specified in the approved construction documents.	-	QC and QA	AISC 360, Section A3.3 and applicable ASTM material standards
b. Manufacturer's certifications available for fastener materials.	QA	QC	AISC 360, Table N5.6-1
c. Fasteners marked in accordance with ASTM requirements.	-	QC and QA	
d. Proper fasteners selected for the joint detail (grade, type, bolt length if threads are to be excluded from shear plane).	-	QC and QA	
e. Proper bolting procedure selected for joint detail.	-	QC and QA	
f. Connecting elements, including the appropriate faying surface condition and hole preparation, if specified, meet applicable requirements.	-	QC and QA	
g. Pre-installation verification testing by installation personnel observed and documented for fastener assemblies and methods used.	QC	QA	
h. Proper storage provided for bolts, nuts, washers and other fastener components.	-	QC and QA	
2. Inspection of high-strength bolting: • For bolts requiring pretensioning, the special inspector shall observe the preinstallation testing and calibration procedures; determine that all plies of connected materials have been drawn together and properly snugged prior to pretentioning and monitor the installation of bolts to verify that fasteners are pretensioned in accordance with the RCSC Specification, progressing systematically from the most rigid point to the free edges. • For joints required to be tightened only to the snug-tight condition, the special inspector need only verify that the connected materials have been drawn together and properly snugged.			
a. Snug-tight joints.	-	QC and QA	AISC 360, Section M2.5
b. Pretensioned and slip-critical joints using turn-of-nut without matchmarking, twist-off bolt or direct tension indicator methods of installation.	-	QC and QA	
c. Pretensioned and slip-critical joints using turn-of-nut without matchmarking of calibrated wrench methods of installation.	QC and QA	-	
d. Fastener assemblies, of suitable condition, placed in all holes and washers (if required) are positioned as required.	-	QC and QA	AISC 360, Table N5.6-2
e. Fastener component not turned by the wrench prevented from rotating.	-	QC and QA	
f. Document acceptance or rejection of bolted connections.	QC and QA	-	AISC 360, Table N5.6-3
3. Material verification of structural steel and cold-formed steel deck U.N.O.:			
a. For structural steel, identification markings to conform to AISC 360.	-	QC and QA	AISC 360, Section M1
b. For other steel, identification markings to conform to ASTM standards specified in the approved construction documents.	-	QC and QA	Applicable ASTM material standards
4. Inspection prior to welding:			
a. Verify identification markings of weld filler materials conform to AWS specification in the approved construction documents.	-	QC and QA	AISC 360, Section A3.5 and applicable AWS AS documents
b. Welding procedure specifications are available.	QC and QA	-	AISC 360, Table N5.4-1
c. Manufacturer certifications for welding consumables available.	QC and QA	-	
d. Material identification (type/grade) and welded identification system.	-	QC and QA	
e. Fit-up of welds including but not limited to joint preparation, dimensions, cleanliness, tacking, and backing type/fit as applicable.	-	QC and QA	
f. Configuration and finish of access holes	-	QC and QA	
g. Check welding equipment.	-	QC	

TABLE 1705.6
REQUIRED SPECIAL INSPECTIONS AND TESTS OF SOILS

TYPE	CONTINUOUS SPECIAL INSPECTION	PERIODIC SPECIAL INSPECTION
1. Verify materials below shallow foundations are adequate to achieve the design bearing capacity.	-	X
2. Verify excavations are extended to proper depth and have reached proper material.	-	X
3. Perform classification and testing of compacted fill materials.	-	X
4. Verify use of proper materials, densities and lift thicknesses during placement and compaction of compacted fill.	X	-
5. Prior to placement of compacted fill, inspect subgrade and verify that site has been prepared properly.	-	X

REQUIRED VERIFICATION AND INSPECTION OF STEEL CONSTRUCTION

VERIFICATION AND INSPECTION	FREQUENCY OF INSPECTION: CONTINUOUS (inspect each joint/member)	FREQUENCY OF INSPECTION: PERIODIC (inspect random joint/members)	REFERENCED STANDARD
5. Inspection of welding:			
a. AISC 360 requirements for welding structural steel			
1) Use of qualified welders	-	QC and QA	AISC 360, Table N5.4-2 During Welding
2) Packaging and exposure control and handling of welding consumables.	-	QC and QA	
3) Welding over cracked tack welds	-	QC and QA	
4) Environmental conditions including but not limited to precipitation, temperature and wind.	-	QC and QA	
5) Verify settings on equipment, travel speeds, elected materials, shielding gas type/floow rate, preheating interpass temperatures and proper position meets WPS standards.	-	QC and QA	
6) Verify welding techniques for interpass, final cleaning, profile limitations, and quality requirements.	-	QC and QA	
7) Welds are cleaned and painted where required.	-	QC and QA	AISC 360, Table N5.4-2 After Welding
8) Verify size, length and locations of welds.	QC and QA	-	
9) Visually verify welds for crack prohibition, weld/base-metal fusion, crater cross section, weld profiles, weld size, undercutting, and porosity.	QC and QA	-	
10) Arc strikes, k-area cracks within 3" of weld, removal of backing, and repair activities as applicable.	QC and QA	-	
11) Documentation of acceptance or rejection of welded joint or member.	QC and QA	-	
b. American Welding Society requirements for structural steel and cold-formed steel deck:			
1) Complete and partial joint penetration groove welds.	X	-	AWS D1.1
2) Multipass fillet welds.	X	-	
3) Single-pass fillet welds > 5/ 16"	X	-	
4) Plug and slot welds.	X	-	
5) Single-pass fillet welds ≤ 5/ 16"	-	X	
6) Floor and roof deck welds.	-	X	AWS D1.3
7) Welded studs & deformed bar anchors (DBA's).	-	X	AWS D1.1
8) Welded sheet steel for cold-formed steel members	-	X	AWS D1.3
9) Welding of stairs & railing systems	-	X	AWS D1.1
c. Reinforcing steel:			
1) Verification of weldability of reinforcing steel other than ASTM A 706.	-	X	AWS D1.4, ACI 318: Section 3.5.2
2) Reinforcing steel resisting flexural and axial forces in intermediate and special moment frames, and boundary elements of special structural walls of concrete and shear reinforcement.	X	-	
3) Shear reinforcement.	X	-	
4) Other reinforcing steel.	-	X	
6. Inspection of steel elements of composite construction prior to concrete placement:			
a. Placement and installation of steel deck.	QC and QA	-	AISC 360, Table N6.1
b. Placement and installation of steel HSA.	QC and QA	-	AISC 360, Table N6.1
c. Documentation of acceptance or rejection of steel elements.	QC and QA	-	AISC 360, Table N6.1

TABLE 1705.2.3
REQUIRED SPECIAL INSPECTIONS OF OPEN-WEB STEEL JOISTS AND JOIST GIRDERS

TYPE	CONTINUOUS SPECIAL INSPECTION	PERIODIC SPECIAL INSPECTION	REFERENCED STANDARD
1. Installation of open-web steel joists and joist girders.			
a. End connections – welding or bolted.	-	X	SJI specification listed in Section 2207.1
b. Bridging – horizontal or diagonal.			
1. Standard bridging.	-	X	SJI specification listed in Section 2207.1
2. Bridging that differs from SJI specifications listed in Section 2207.1	-	X	

KFC engineering
Kirkpatrick Forest Curtis PC
Structural Engineering
OK CA #3888, EXP. 06/30/25
525 Central Park Drive, Suite 202
Oklahoma City, OK. 73105
405.528.4596 | kfcengr.com

AGP
the Abla Griffin Partnership L.L.C.
201 N. BROADWAY
SUITE 210
MOORE, OK. 73160
405.735.3477
AGP@theAGP.net
www.theAGP.net

CEDAR CREEK
CIVIL

KFC ENGINEERING
STRUCTURAL

SALAS O'BRIEN
MECHANICAL / ELECTRICAL

CJC
drawn by

BWB
checked by

JULY 2023
date

revisions

MOORE PUBLIC SCHOOLS
BOARD OF EDUCATION
MOORE, OKLAHOMA

MOORE Public Schools
LEARNING FOR LIFE

CLASSROOM ADDITION
HIGHLAND WEST
JUNIOR HIGH SCHOOL

sheet no:

S106

OWNERSHIP USE OF DOCUMENTS:

AGP EXPRESSLY RESERVES ITS COPYRIGHT AND OTHER PROPERTY RIGHTS OF ALL PLANS AND DRAWINGS DESIGNED AND/OR PRODUCED. PLANS AND DRAWINGS ARE NOT TO BE REPRODUCED IN ANY FORM OR MANNER WITHOUT THE EXPRESSED WRITTEN CONSENT OF AGP.

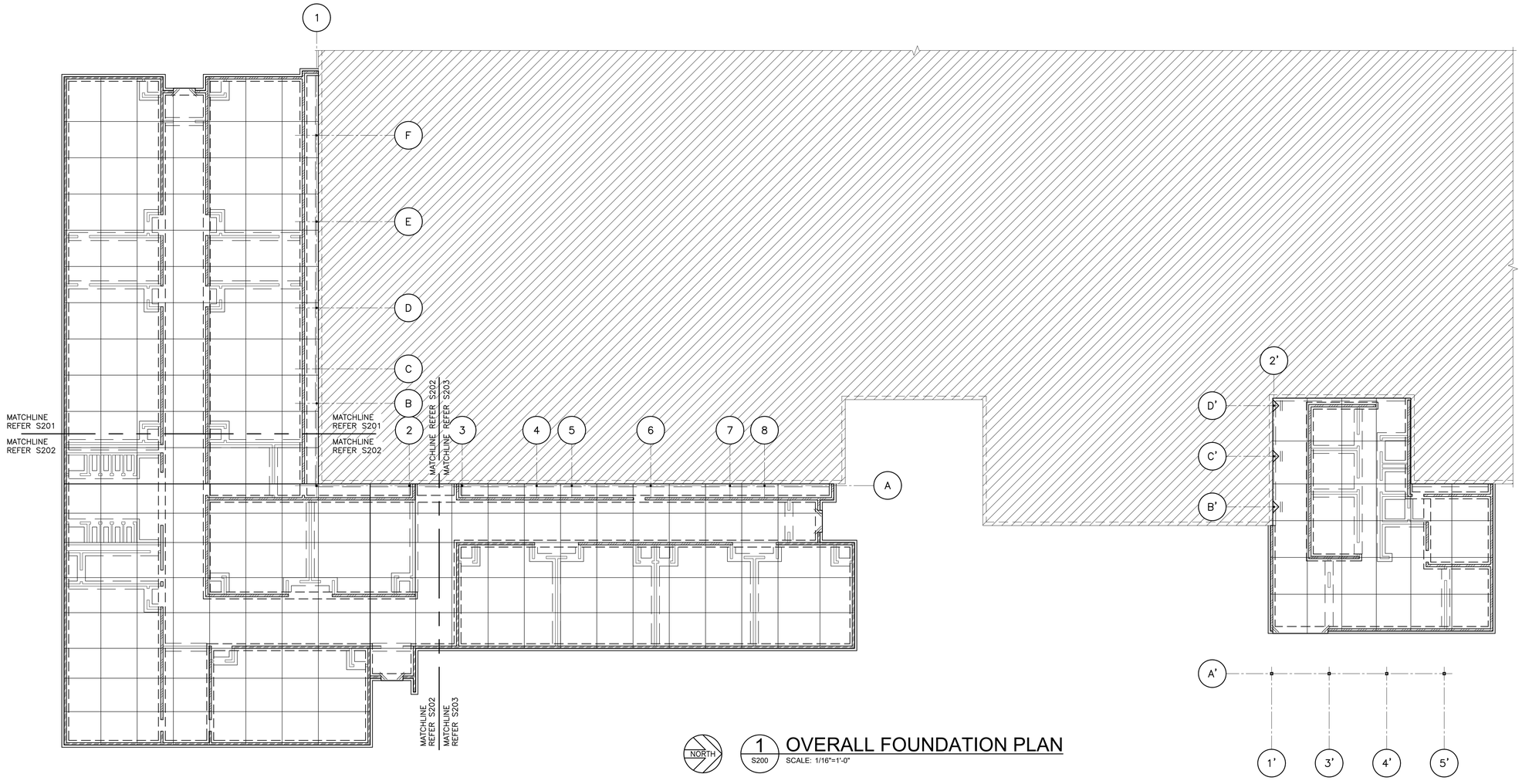

1 S200 OVERALL FOUNDATION PLAN

SCALE: 1/16"=1'-0"

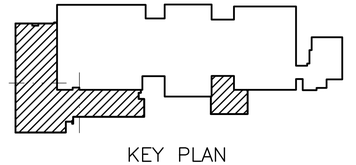

KEY PLAN

AGP
the Abla Griffin Partnership L.L.C.

201 N. BROADWAY
SUITE 210
MOORE, OK. 73160
405.735.3477
AGP@theAGP.net
www.theAGP.net

CEDAR CREEK
CIVIL

KFC ENGINEERING
STRUCTURAL

SALAS O'BRIEN
MECHANICAL / ELECTRICAL

CJC
drawn by

BWB
checked by

JULY 2023
date

revisions

MOORE PUBLIC SCHOOLS
BOARD OF EDUCATION
MOORE, OKLAHOMA

MOORE Public Schools
LEARNING FOR LIFE

CLASSROOM ADDITION
HIGHLAND WEST
JUNIOR HIGH SCHOOL

sheet no:

S200

KFC engineering
Kirkpatrick Forest Curtis PC
Structural Engineering
OK CA #3888, EXP. 06/30/25
525 Central Park Drive, Suite 202
Oklahoma City, OK. 73105
405.528.4596 | kfcengr.com

OWNERSHIP USE OF DOCUMENTS:

AGP EXPRESSLY RESERVES ITS COPYRIGHT AND OTHER PROPERTY RIGHTS OF ALL PLANS AND DRAWINGS DESIGNED AND/OR PRODUCED. PLANS AND DRAWINGS ARE NOT TO BE REPRODUCED IN ANY FORM OR MANNER WITHOUT THE EXPRESSED WRITTEN CONSENT OF AGP.

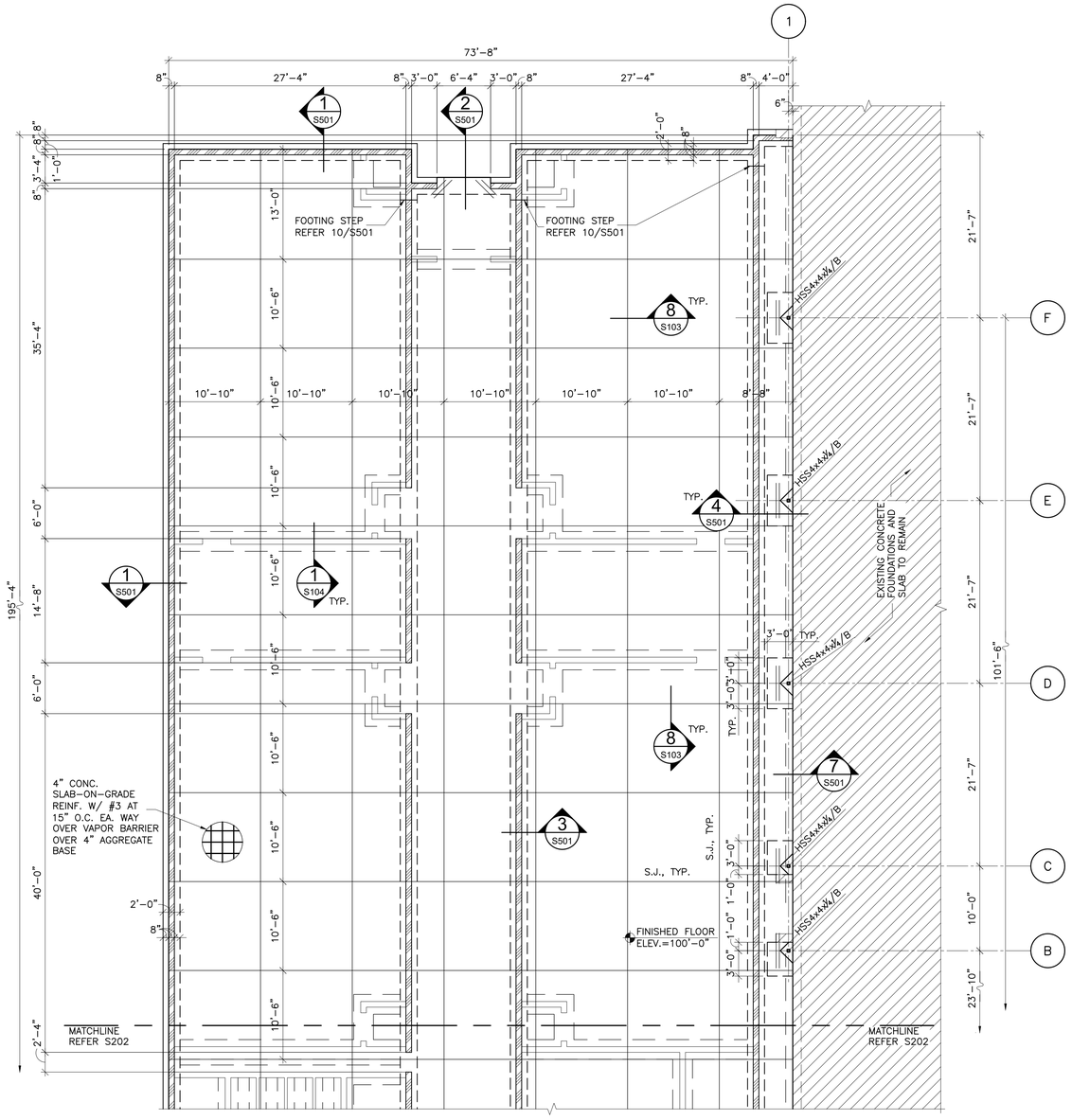

NORTH

1 S201 FOUNDATION PLAN AREA A

SCALE: 1/8"=1'-0"

FOUNDATION PLAN LEGEND:

= LOAD BEARING MASONRY WALLS

= NON-LOAD BEARING MASONRY WALLS

FOUNDATION PLAN NOTES:

1. FOUNDATION AND SLAB SUBGRADE SHALL BE PREPARED AS OUTLINED IN THE STRUCTURAL GENERAL NOTES.
2. REFERENCE ELEVATION OF 100'-0" EQUALS DATUM FINISHED FLOOR ELEVATION OF 1249.21 FEET FOR THE NEW BUILDING.
3. EXCEPT WHERE SHOWN OTHERWISE, SLABS-ON-GRADE SHALL BE 4" THICK CONCRETE REINFORCED WITH #3 BARS AT 15" ON CENTER EACH WAY OVER A 15 MIL VAPOR RETARDER OVER A 4" AGGREGATE BASE COURSE. REINFORCING BARS SHALL BE PLACED 1½" CLEAR FROM TOP OF SLAB USING CHAIRS OR SLAB BOLSTERS COMPLYING WITH CRSI'S "MANUAL OF STANDARD PRACTICE".
4. SLABS-ON-GRADE SHALL BE WATER CURED FOR A MINIMUM OF 7 DAYS BY PONDING, SPRAYING, SPRINKLING OR BY USE OF SATURATED COVERINGS. THE USE OF CURING COMPOUNDS FOR SLABS-ON-GRADE IS PROHIBITED.
5. SAWED JOINTS (SJ) AND REQUIRED CONSTRUCTION JOINTS (CJ) ARE SHOWN ON THE DRAWINGS. AT THE CONTRACTOR'S OPTION, ADDITIONAL CONSTRUCTION JOINTS MAY BE PLACED AT LOCATIONS INDICATED TO BE SAWED JOINTS.
6. // INDICATES (2)#4 BARSx4'-0" TO BE PLACED IN SLAB-ON-GRADE AT ALL RE-ENTRANT CORNERS. RE-ENTRANT CORNERS ARE DEFINED AS INTERIOR CORNERS WHERE JOINTS DO NOT OCCUR IN BOTH DIRECTIONS. SIMILAR BARS SHALL BE PLACED AT ANY DISCONTINUOUS ENDS OF SAWED JOINTS OR CONSTRUCTION JOINTS.
7. REFER MECHANICAL FOR FLOOR DRAIN (F.D.) INFORMATION.

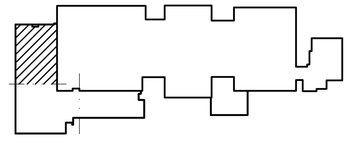

KEY PLAN

AGP
the Abla Griffin Partnership L.L.C.
201 N. BROADWAY
SUITE 210
MOORE, OK. 73160
405.735.3477
AGP@theAGP.net
www.theAGP.net

CEDAR CREEK
CIVIL

KFC ENGINEERING
STRUCTURAL

SALAS O'BRIEN
MECHANICAL / ELECTRICAL

PROFESSIONAL STRUCTURAL ENGINEER
BRANDON W. BIRCH
26145
OKLAHOMA
07/31/2023

CJC
drawn by

BWB
checked by

JULY 2023
date

revisions

MOORE PUBLIC SCHOOLS
BOARD OF EDUCATION
MOORE, OKLAHOMA

MOORE Public Schools
LEARNING FOR LIFE

CLASSROOM ADDITION
HIGHLAND WEST
JUNIOR HIGH SCHOOL

sheet no:

S201

KFC engineering
Kirkpatrick Forest Curtis PC
Structural Engineering
OK CA #3888, EXP. 06/30/25
525 Central Park Drive, Suite 202
Oklahoma City, OK 73105
405.528.4596 | kfcengr.com

OWNERSHIP USE OF DOCUMENTS:

AGP EXPRESSLY RESERVES ITS COPYRIGHT AND OTHER PROPERTY RIGHTS OF ALL PLANS AND DRAWINGS DESIGNED AND/OR PRODUCED. PLANS AND DRAWINGS ARE NOT TO BE REPRODUCED IN ANY FORM OR MANNER WITHOUT THE EXPRESSED WRITTEN CONSENT OF AGP.

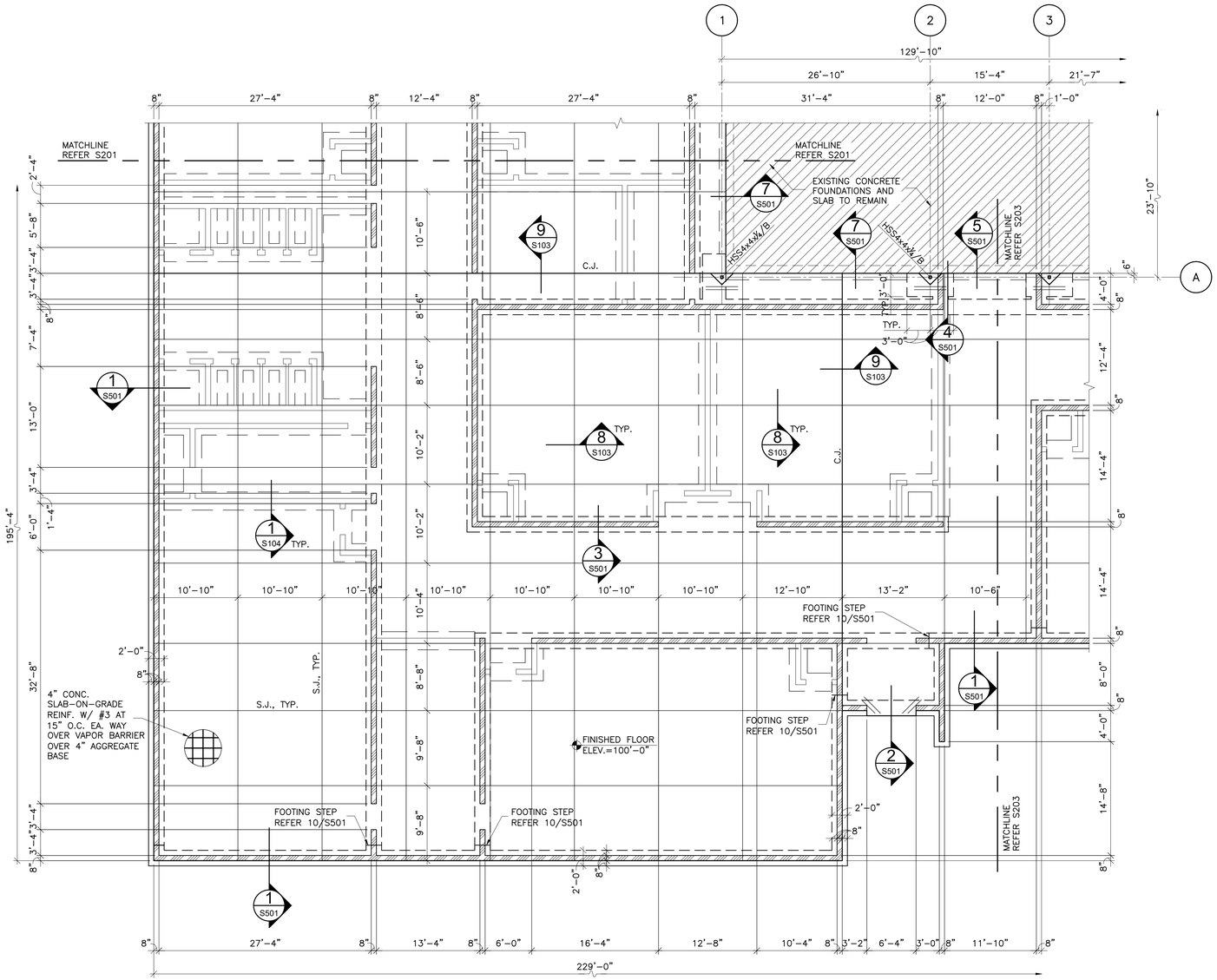

NORTH

1 S202 FOUNDATION PLAN AREA B

SCALE: 1/8"=1'-0"

FOUNDATION PLAN LEGEND:

= LOAD BEARING MASONRY WALLS

= NON–LOAD BEARING MASONRY WALLS

FOUNDATION PLAN NOTES:

1. FOUNDATION AND SLAB SUBGRADE SHALL BE PREPARED AS OUTLINED IN THE STRUCTURAL GENERAL NOTES.
2. REFERENCE ELEVATION OF 100'-0" EQUALS DATUM FINISHED FLOOR ELEVATION OF 1249.21 FEET FOR THE NEW BUILDING.
3. EXCEPT WHERE SHOWN OTHERWISE, SLABS-ON-GRADE SHALL BE 4" THICK CONCRETE REINFORCED WITH #3 BARS AT 15" ON CENTER EACH WAY OVER A 15 MIL VAPOR RETARDER OVER A 4" AGGREGATE BASE COURSE. REINFORCING BARS SHALL BE PLACED 1½" CLEAR FROM TOP OF SLAB USING CHAIRS OR SLAB BOLSTERS COMPLYING WITH CRSI'S "MANUAL OF STANDARD PRACTICE".
4. SLABS-ON-GRADE SHALL BE WATER CURED FOR A MINIMUM OF 7 DAYS BY PONDING, SPRAYING, SPRINKLING OR BY USE OF SATURATED COVERINGS. THE USE OF CURING COMPOUNDS FOR SLABS-ON-GRADE IS PROHIBITED.
5. SAWED JOINTS (SJ) AND REQUIRED CONSTRUCTION JOINTS (CJ) ARE SHOWN ON THE DRAWINGS. AT THE CONTRACTOR'S OPTION, ADDITIONAL CONSTRUCTION JOINTS MAY BE PLACED AT LOCATIONS INDICATED TO BE SAWED JOINTS.
6. // INDICATES (2)#4 BARS×4'-0" TO BE PLACED IN SLAB-ON-GRADE AT ALL RE-ENTRANT CORNERS. RE-ENTRANT CORNERS ARE DEFINED AS INTERIOR CORNERS WHERE JOINTS DO NOT OCCUR IN BOTH DIRECTIONS. SIMILAR BARS SHALL BE PLACED AT ANY DISCONTINUOUS ENDS OF SAWED JOINTS OR CONSTRUCTION JOINTS.
7. REFER MECHANICAL FOR FLOOR DRAIN (F.D.) INFORMATION.

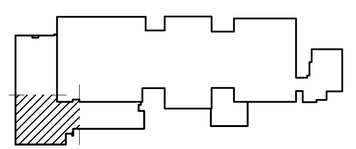

KEY PLAN

AGP
the Abla Griffin Partnership L.L.C.
201 N. BROADWAY
SUITE 210
MOORE, OK. 73160
405.735.3477
AGP@theAGP.net
www.theAGP.net

CEDAR CREEK
CIVIL

KFC ENGINEERING
STRUCTURAL

SALAS O'BRIEN
MECHANICAL / ELECTRICAL

PROFESSIONAL STRUCTURAL ENGINEER
BRANDON W. BIRCH
26145
OKLAHOMA
6/19/2023

CJC
drawn by

BWB
checked by

JULY 2023
date

revisions

MOORE PUBLIC SCHOOLS
BOARD OF EDUCATION
MOORE, OKLAHOMA

MOORE Public Schools
LEARNING FOR LIFE

CLASSROOM ADDITION
HIGHLAND WEST
JUNIOR HIGH SCHOOL

sheet no:

S202

KFC engineering
Kirkpatrick Forest Curtis PC
Structural Engineering
OK CA #3888, EXP. 06/30/25
525 Central Park Drive, Suite 202
Oklahoma City, OK 73105
405.528.4596 | kfcengr.com

OWNERSHIP USE OF DOCUMENTS:

AGP EXPRESSLY RESERVES ITS COPYRIGHT AND OTHER PROPERTY RIGHTS OF ALL PLANS AND DRAWINGS DESIGNED AND/OR PRODUCED. PLANS AND DRAWINGS ARE NOT TO BE REPRODUCED IN ANY FORM OR MANNER WITHOUT THE EXPRESSED WRITTEN CONSENT OF AGP.

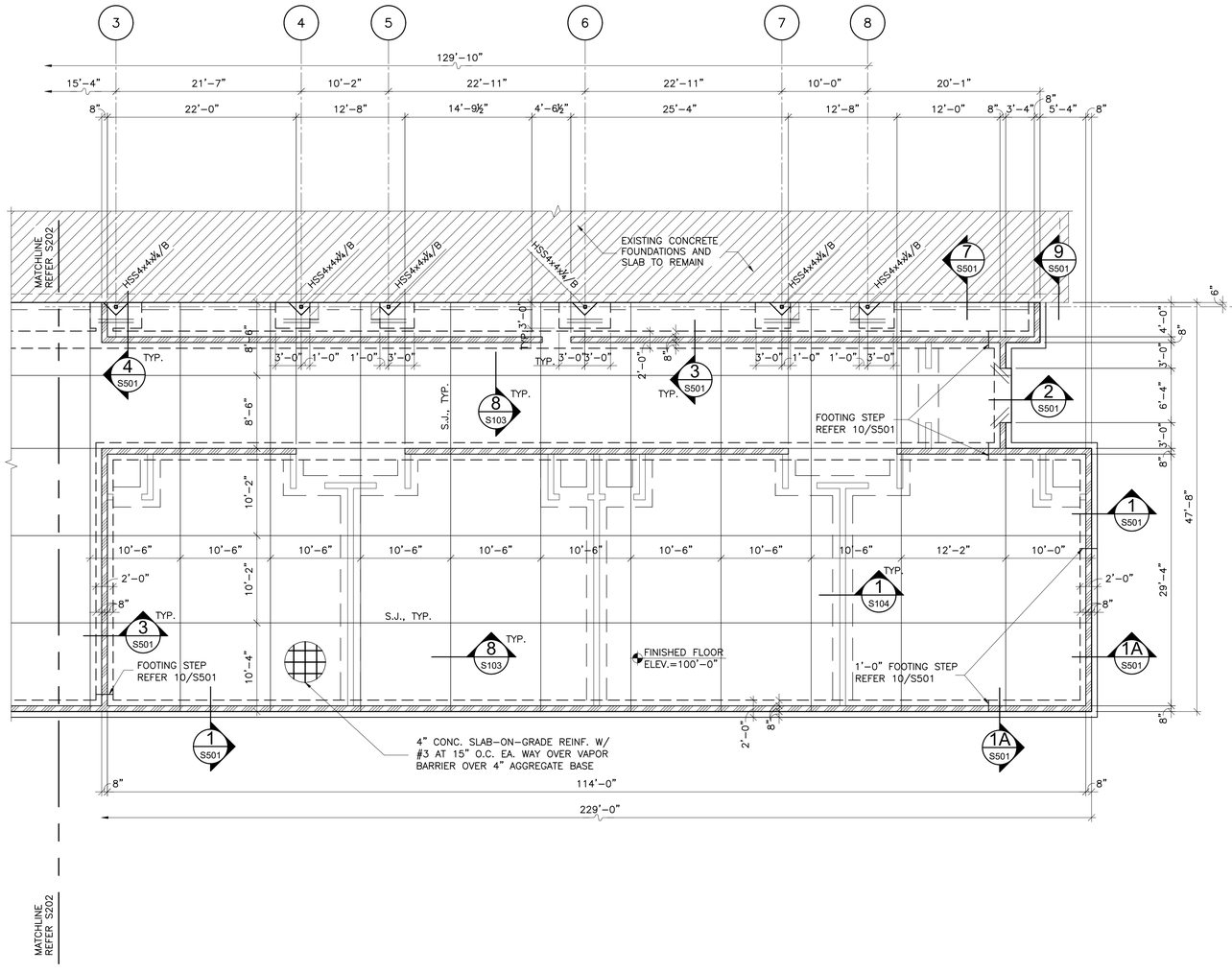

NORTH

1 S203 **FOUNDATION PLAN AREA C**

SCALE: 1/8"=1'-0"

FOUNDATION PLAN LEGEND:

= LOAD BEARING MASONRY WALLS

= NON-LOAD BEARING MASONRY WALLS

FOUNDATION PLAN NOTES:

1. FOUNDATION AND SLAB SUBGRADE SHALL BE PREPARED AS OUTLINED IN THE STRUCTURAL GENERAL NOTES.
2. REFERENCE ELEVATION OF 100'-0" EQUALS DATUM FINISHED FLOOR ELEVATION OF 1249.21 FEET FOR THE NEW BUILDING.
3. EXCEPT WHERE SHOWN OTHERWISE, SLABS-ON-GRADE SHALL BE 4" THICK CONCRETE REINFORCED WITH #3 BARS AT 15" ON CENTER EACH WAY OVER A 15 MIL VAPOR RETARDER OVER A 4" AGGREGATE BASE COURSE. REINFORCING BARS SHALL BE PLACED 1½" CLEAR FROM TOP OF SLAB USING CHAIRS OR SLAB BOLSTERS COMPLYING WITH CRSI'S "MANUAL OF STANDARD PRACTICE".
4. SLABS-ON-GRADE SHALL BE WATER CURED FOR A MINIMUM OF 7 DAYS BY PONDING, SPRAYING, SPRINKLING OR BY USE OF SATURATED COVERINGS. THE USE OF CURING COMPOUNDS FOR SLABS-ON-GRADE IS PROHIBITED.
5. SAWED JOINTS (SJ) AND REQUIRED CONSTRUCTION JOINTS (CJ) ARE SHOWN ON THE DRAWINGS. AT THE CONTRACTOR'S OPTION, ADDITIONAL CONSTRUCTION JOINTS MAY BE PLACED AT LOCATIONS INDICATED TO BE SAWED JOINTS.
6. // INDICATES (2)#4 BARSx4'-0" TO BE PLACED IN SLAB-ON-GRADE AT ALL RE-ENTRANT CORNERS. RE-ENTRANT CORNERS ARE DEFINED AS INTERIOR CORNERS WHERE JOINTS DO NOT OCCUR IN BOTH DIRECTIONS. SIMILAR BARS SHALL BE PLACED AT ANY DISCONTINUOUS ENDS OF SAWED JOINTS OR CONSTRUCTION JOINTS.
7. REFER MECHANICAL FOR FLOOR DRAIN (F.D.) INFORMATION.

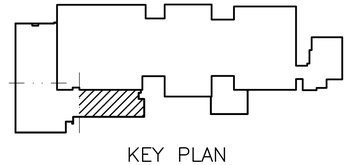

KEY PLAN

AGP
the Abla Griffin Partnership L.L.C.
201 N. BROADWAY
SUITE 210
MOORE, OK. 73160
405.735.3477
AGP@theAGP.net
www.theAGP.net

CEDAR CREEK
CIVIL

KFC ENGINEERING
STRUCTURAL

SALAS O'BRIEN
MECHANICAL / ELECTRICAL

PROFESSIONAL STRUCTURAL ENGINEER
BRANDON W. BIRCH
26145
OKLAHOMA
6/14/2023

CJC
drawn by

BWB
checked by

JULY 2023
date

revisions

MOORE PUBLIC SCHOOLS
BOARD OF EDUCATION
MOORE, OKLAHOMA

MOORE Public Schools
LEARNING FOR LIFE

CLASSROOM ADDITION
HIGHLAND WEST
JUNIOR HIGH SCHOOL

sheet no:

S203

KFC engineering
Kirkpatrick Forest Curtis PC
Structural Engineering
OK CA #3888, EXP. 06/30/25
525 Central Park Drive, Suite 202
Oklahoma City, OK. 73105
405.528.4596 | kfcengr.com

OWNERSHIP USE OF DOCUMENTS:

AGP EXPRESSLY RESERVES ITS COPYRIGHT AND OTHER PROPERTY RIGHTS OF ALL PLANS AND DRAWINGS DESIGNED AND/OR PRODUCED. PLANS AND DRAWINGS ARE NOT TO BE REPRODUCED IN ANY FORM OR MANNER WITHOUT THE EXPRESSED WRITTEN CONSENT OF AGP.

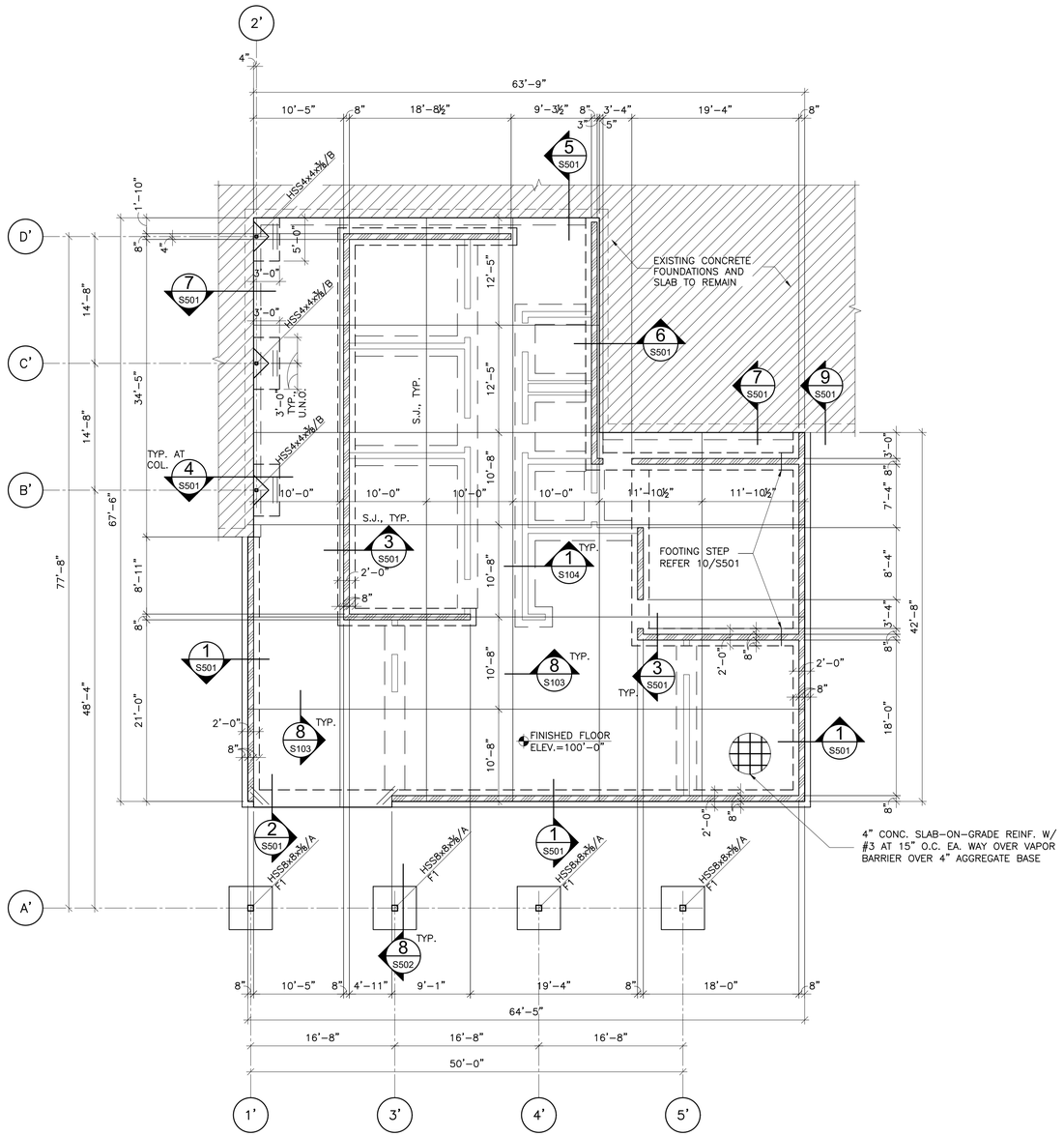

NORTH

1 FOUNDATION PLAN AREA D

S204

SCALE: 1/8"=1'-0"

FOUNDATION PLAN LEGEND:

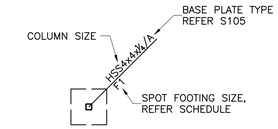

= LOAD BEARING MASONRY WALLS

= NON-LOAD BEARING MASONRY WALLS

FOUNDATION PLAN NOTES:

1. FOUNDATION AND SLAB SUBGRADE SHALL BE PREPARED AS OUTLINED IN THE STRUCTURAL GENERAL NOTES.
2. REFERENCE ELEVATION OF 100'-0" EQUALS DATUM FINISHED FLOOR ELEVATION OF 1249.38 FEET FOR THE NEW BUILDING.
3. EXCEPT WHERE SHOWN OTHERWISE, SLABS-ON-GRADE SHALL BE 4" THICK CONCRETE REINFORCED WITH #3 BARS AT 15" ON CENTER EACH WAY OVER A 15 MIL VAPOR RETARDER OVER A 4" AGGREGATE BASE COURSE. REINFORCING BARS SHALL BE PLACED 1½" CLEAR FROM TOP OF SLAB USING CHAIRS OR SLAB BOLSTERS COMPLYING WITH CRSI'S "MANUAL OF STANDARD PRACTICE".
4. SLABS-ON-GRADE SHALL BE WATER CURED FOR A MINIMUM OF 7 DAYS BY PONDING, SPRAYING, SPRINKLING OR BY USE OF SATURATED COVERINGS. THE USE OF CURING COMPOUNDS FOR SLABS-ON-GRADE IS PROHIBITED.
5. SAWED JOINTS (SJ) AND REQUIRED CONSTRUCTION JOINTS (CJ) ARE SHOWN ON THE DRAWINGS. AT THE CONTRACTOR'S OPTION, ADDITIONAL CONSTRUCTION JOINTS MAY BE PLACED AT LOCATIONS INDICATED TO BE SAWED JOINTS.
6. // INDICATES (2)#4 BARSx4'-0" TO BE PLACED IN SLAB-ON-GRADE AT ALL RE-ENTRANT CORNERS. RE-ENTRANT CORNERS ARE DEFINED AS INTERIOR CORNERS WHERE JOINTS DO NOT OCCUR IN BOTH DIRECTIONS. SIMILAR BARS SHALL BE PLACED AT ANY DISCONTINUOUS ENDS OF SAWED JOINTS OR CONSTRUCTION JOINTS.
7. REFER MECHANICAL FOR FLOOR DRAIN (F.D.) INFORMATION.

SPOT FOOTING SCHEDULE

MARK	SIZE			REINFORCEMENT
	WIDTH	LENGTH	DEPTH	
F1	5'-0"	5'-0"	2'-0"	(6) #5 TOP AND BOT. EA. WAY

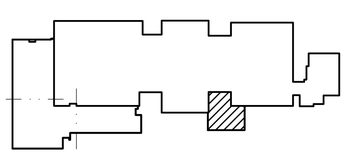

KEY PLAN

AGP
the Abla Griffin Partnership L.L.C.
201 N. BROADWAY
SUITE 210
MOORE, OK. 73160
405.735.3477
AGP@theAGP.net
www.theAGP.net

CEDAR CREEK
CIVIL

KFC ENGINEERING
STRUCTURAL

SALAS O'BRIEN
MECHANICAL / ELECTRICAL

PROFESSIONAL STRUCTURAL ENGINEER
BRANDON W. BIRCH
26145
OKLAHOMA
6/30/2023

CJC
drawn by

BWB
checked by

JULY 2023
date

revisions

MOORE PUBLIC SCHOOLS
BOARD OF EDUCATION
MOORE, OKLAHOMA

MOORE Public Schools
LEARNING FOR LIFE

CLASSROOM ADDITION
HIGHLAND WEST
JUNIOR HIGH SCHOOL

sheet no:

S204

OWNERSHIP USE OF DOCUMENTS:

AGP EXPRESSLY RESERVES ITS COPYRIGHT AND OTHER PROPERTY RIGHTS OF ALL PLANS AND DRAWINGS DESIGNED AND/OR PRODUCED. PLANS AND DRAWINGS ARE NOT TO BE REPRODUCED IN ANY FORM OR MANNER WITHOUT THE EXPRESSED WRITTEN CONSENT OF AGP.

KFC engineering
Kirkpatrick Forest Curtis PC
Structural Engineering
OK CA #3888, EXP. 06/30/25
525 Central Park Drive, Suite 202
Oklahoma City, OK. 73105
405.528.4596 | kfcengr.com

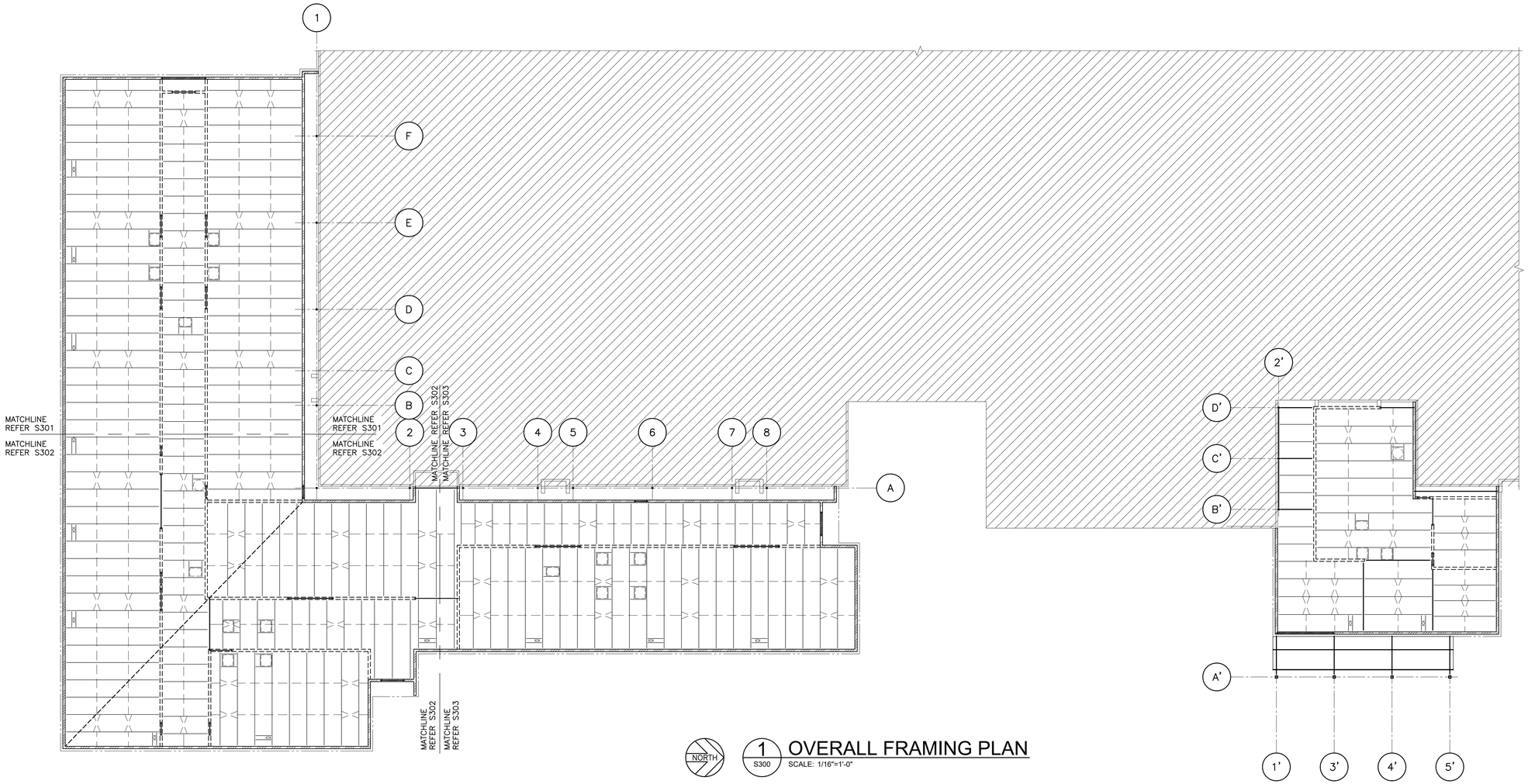

NORTH

1 S300 OVERALL FRAMING PLAN

SCALE: 1/16"=1'-0"

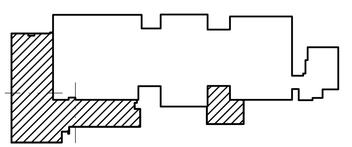

KEY PLAN

AGP
the Abla Griffin Partnership L.L.C.

201 N. BROADWAY
SUITE 210
MOORE, OK. 73160
405.735.3477
AGP@theAGP.net
www.theAGP.net

CEDAR CREEK
CIVIL

KFC ENGINEERING
STRUCTURAL

SALAS O'BRIEN
MECHANICAL / ELECTRICAL

PROFESSIONAL STRUCTURAL ENGINEER
BRANDON W. BIRCH
26145
OKLAHOMA
07/31/2023

CJC
drawn by

BWB
checked by

JULY 2023
date

revisions

MOORE PUBLIC SCHOOLS
BOARD OF EDUCATION
MOORE, OKLAHOMA

MOORE Public Schools
LEARNING FOR LIFE

CLASSROOM ADDITION
HIGHLAND WEST
JUNIOR HIGH SCHOOL

sheet no:

S300

KFC engineering
Kirkpatrick Forest Curtis PC
Structural Engineering
OK CA #3888, EXP. 06/30/25
525 Central Park Drive, Suite 202
Oklahoma City, OK 73105
405.528.4596 | kfcengr.com

OWNERSHIP USE OF DOCUMENTS:

AGP EXPRESSLY RESERVES ITS COPYRIGHT AND OTHER PROPERTY RIGHTS OF ALL PLANS AND DRAWINGS DESIGNED AND/OR PRODUCED. PLANS AND DRAWINGS ARE NOT TO BE REPRODUCED IN ANY FORM OR MANNER WITHOUT THE EXPRESSED WRITTEN CONSENT OF AGP.

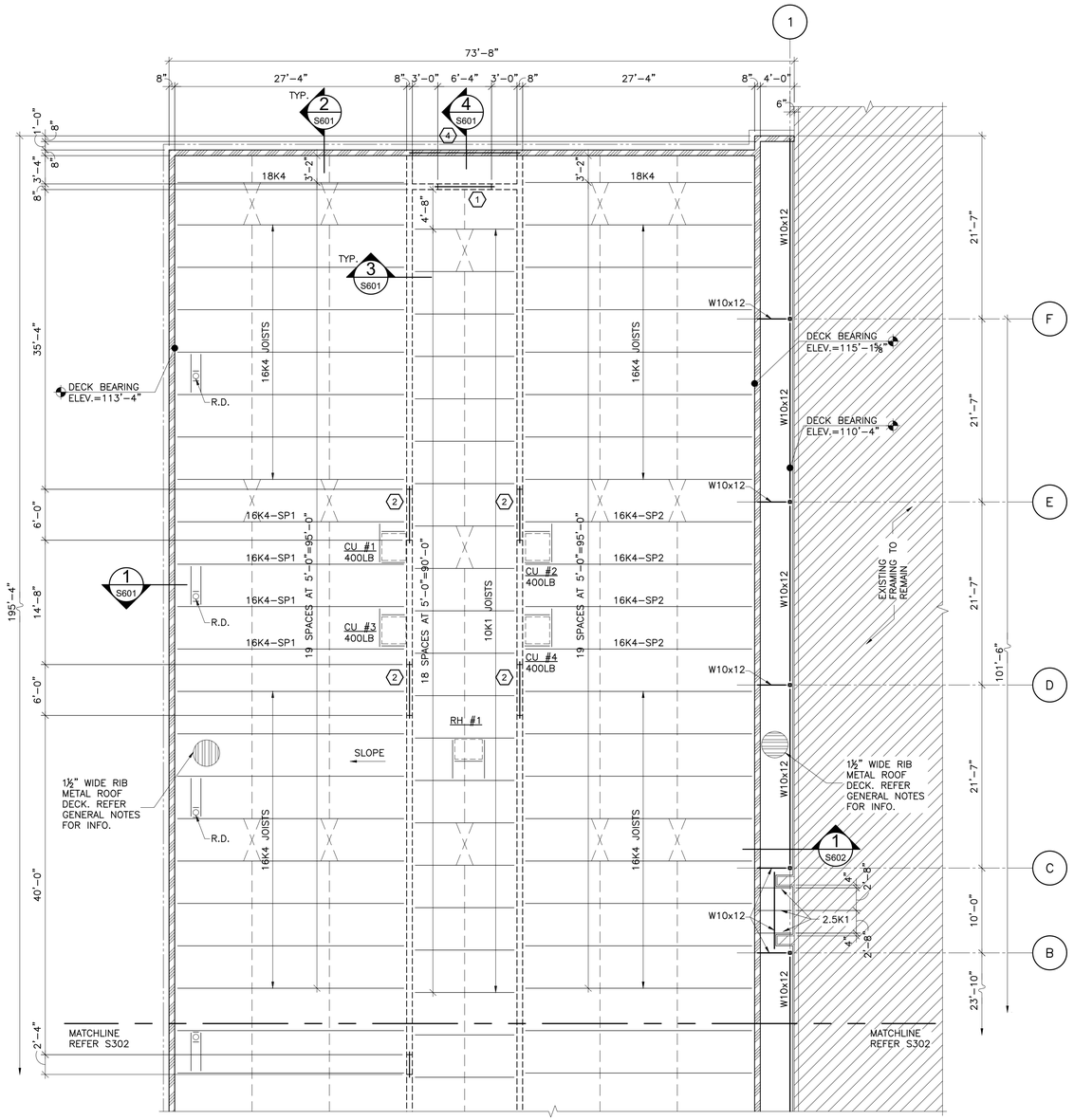

1 S301 FRAMING PLAN AREA A

NORTH

SCALE: 1/8"=1'-0"

ROOF FRAMING PLAN NOTES:

1. ALL ELEVATIONS ARE REFERENCED FROM FINISHED FLOOR DATUM OF 100'-0". REFER FOUNDATION PLAN NOTES FOR ACTUAL ELEVATION.
2. REFER TO FOUNDATION PLAN FOR COLUMN SIZES.
3. ALL ROOF OPENINGS FOR MECHANICAL ROOF TOP UNITS ARE APPROXIMATELY LOCATED. EXACT SIZE AND LOCATIONS SHALL BE COORDINATED WITH THE SUCCESSFUL MECHANICAL CONTRACTOR. ALL ROOF/WALL OPENINGS SHALL BE SUPPORTED WITH TYPICAL ANGLE FRAME UNLESS NOTED OTHERWISE.
4. (27K) INDICATES MAXIMUM FACTORED BEAM END REACTION IN ACCORDANCE WITH THE AISC LRFD SPECIFICATION. IF NOT SHOWN, PROVIDE 10K MINIMUM CAPACITY. REFER TO TYPICAL CONNECTION DETAILS.
5. T.O. PARAPET REFERS TO THE TOP OF METAL STUD/MASONRY WALL ELEVATION WITH REFERENCE TO FINISH FLOOR ELEVATION SPECIFIED ON THE FOUNDATION PLAN U.N.O.
6. (1) DENOTES MASONRY LINTEL TYPE. REFER S104 FOR ADDITIONAL INFORMATION.

FRAMING PLAN LEGEND:

= L1¾x1¼x7/64 MIN. HORIZONTAL JOIST BRIDGING BY JOIST MANUFACTURER

= L1¾x1¼x7/64 MIN. JOIST X-BRIDGING BY JOIST MANUFACTURER

BEAM SIZE — W12x22

R20/25 — FACTORED END REACTION, KIPS

NOTE:
IF ONLY ONE NUMBER IS PROVIDED FOR END REACTIONS, REACTION APPLIES TO BOTH ENDS. WHERE NO REACTION IS GIVEN, USE 10K.

= LOAD BEARING MASONRY WALLS

= INTERIOR LOAD BEARING MASONRY WALLS

KEY PLAN

AGP
the Abla Griffin Partnership L.L.C.
201 N. BROADWAY
SUITE 210
MOORE, OK. 73160
405.735.3477
AGP@theAGP.net
www.theAGP.net

CEDAR CREEK
CIVIL

KFC ENGINEERING
STRUCTURAL

SALAS O'BRIEN
MECHANICAL / ELECTRICAL

PROFESSIONAL STRUCTURAL ENGINEER
BRANDON W. BIRCH
26145
OKLAHOMA
07/31/2023

CJC
drawn by

BWB
checked by

JULY 2023
date

revisions

MOORE PUBLIC SCHOOLS
BOARD OF EDUCATION
MOORE, OKLAHOMA

MOORE Public Schools
LEARNING FOR LIFE

CLASSROOM ADDITION
HIGHLAND WEST
JUNIOR HIGH SCHOOL

sheet no:

S301

KFC engineering
Kirkpatrick Forest Curtis PC
Structural Engineering
OK CA #3888, EXP. 06/30/25
525 Central Park Drive, Suite 202
Oklahoma City, OK 73105
405.528.4596 | kfcengr.com

OWNERSHIP USE OF DOCUMENTS:

AGP EXPRESSLY RESERVES ITS COPYRIGHT AND OTHER PROPERTY RIGHTS OF ALL PLANS AND DRAWINGS DESIGNED AND/OR PRODUCED. PLANS AND DRAWINGS ARE NOT TO BE REPRODUCED IN ANY FORM OR MANNER WITHOUT THE EXPRESSED WRITTEN CONSENT OF AGP.

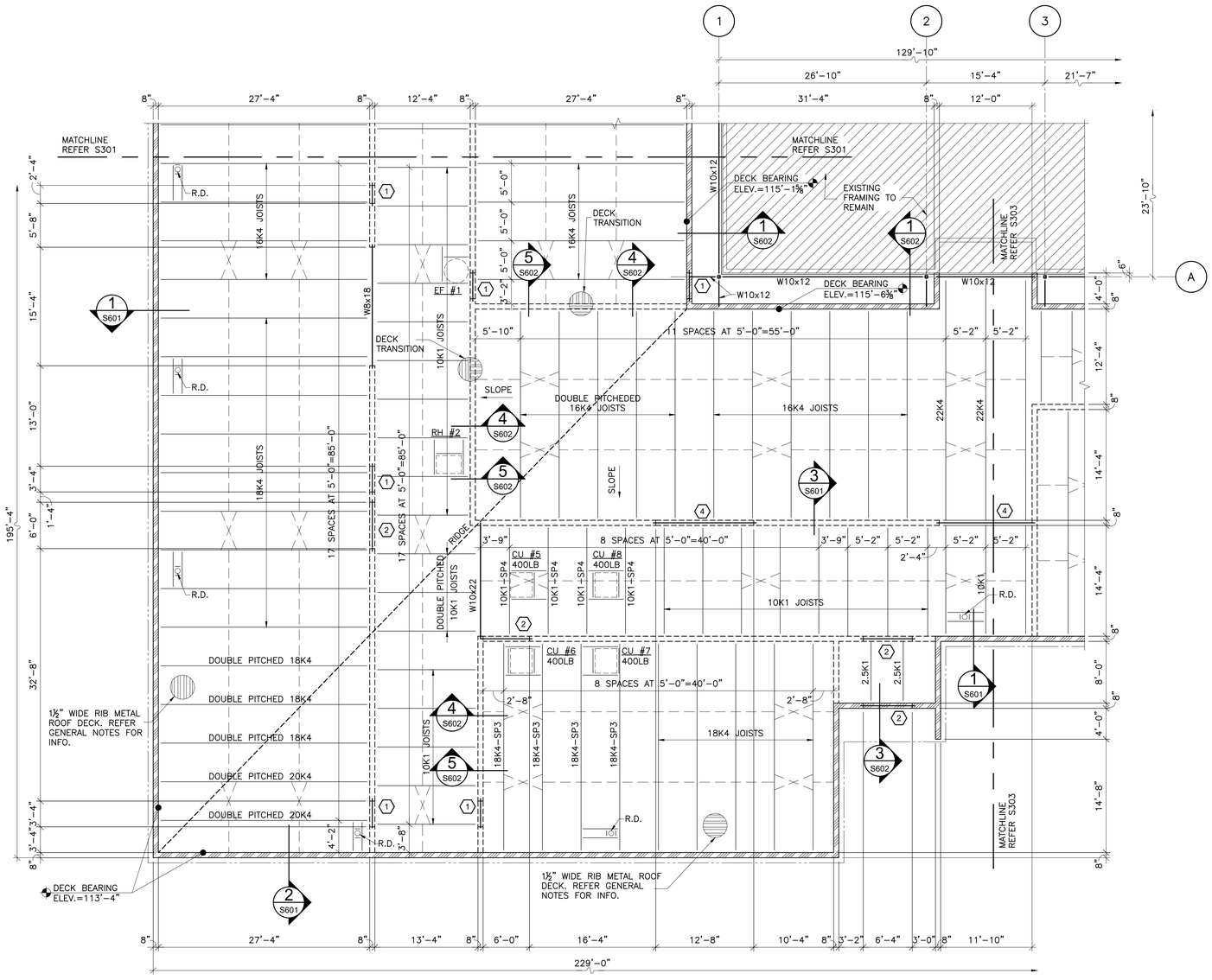

ROOF FRAMING PLAN NOTES:

1. ALL ELEVATIONS ARE REFERENCED FROM FINISHED FLOOR DATUM OF 100'-0". REFER FOUNDATION PLAN NOTES FOR ACTUAL ELEVATION.
2. REFER TO FOUNDATION PLAN FOR COLUMN SIZES.
3. ALL ROOF OPENINGS FOR MECHANICAL ROOF TOP UNITS ARE APPROXIMATELY LOCATED. EXACT SIZE AND LOCATIONS SHALL BE COORDINATED WITH THE SUCCESSFUL MECHANICAL CONTRACTOR. ALL ROOF/WALL OPENINGS SHALL BE SUPPORTED WITH TYPICAL ANGLE FRAME UNLESS NOTED OTHERWISE.
4. (27K) INDICATES MAXIMUM FACTORED BEAM END REACTION IN ACCORDANCE WITH THE AISC LRFD SPECIFICATION. IF NOT SHOWN, PROVIDE 10K MINIMUM CAPACITY. REFER TO TYPICAL CONNECTION DETAILS.
5. T.O. PARAPET REFERS TO THE TOP OF METAL STUD/MASONRY WALL ELEVATION WITH REFERENCE TO FINISH FLOOR ELEVATION SPECIFIED ON THE FOUNDATION PLAN U.N.O.
6. (1) DENOTES MASONRY LINTEL TYPE. REFER S104 FOR ADDITIONAL INFORMATION.

FRAMING PLAN LEGEND:

= L1¾x1¼x7/64 MIN. HORIZONTAL JOIST BRIDGING BY JOIST MANUFACTURER

= L1¾x1¼x7/64 MIN. JOIST X-BRIDGING BY JOIST MANUFACTURER

BEAM SIZE — W12x22 — R20/25 — FACTORED END REACTION, KIPS

NOTE:
IF ONLY ONE NUMBER IS PROVIDED FOR END REACTIONS, REACTION APPLIES TO BOTH ENDS. WHERE NO REACTION IS GIVEN, USE 10K.

= LOAD BEARING MASONRY WALLS

= INTERIOR LOAD BEARING MASONRY WALLS

NORTH

1 S302 FRAMING PLAN AREA B

SCALE: 1/8"=1'-0"

KEY PLAN

AGP
the Abla Griffin Partnership L.L.C.
201 N. BROADWAY
SUITE 210
MOORE, OK. 73160
405.735.3477
AGP@theAGP.net
www.theAGP.net

CEDAR CREEK
CIVIL

KFC ENGINEERING
STRUCTURAL

SALAS O'BRIEN
MECHANICAL / ELECTRICAL

PROFESSIONAL STRUCTURAL ENGINEER
BRANDON W. BIRCH
26145
OKLAHOMA
6/30/2023

CJC
drawn by

BWB
checked by

JULY 2023
date

revisions

MOORE PUBLIC SCHOOLS
BOARD OF EDUCATION
MOORE, OKLAHOMA

MOORE Public Schools
LEARNING FOR LIFE

CLASSROOM ADDITION
HIGHLAND WEST
JUNIOR HIGH SCHOOL

sheet no:

S302

KFC engineering
Kirkpatrick Forest Curtis PC
Structural Engineering
OK CA #3888, EXP. 06/30/25
525 Central Park Drive, Suite 202
Oklahoma City, OK 73105
405.528.4596 | kfcengr.com

OWNERSHIP USE OF DOCUMENTS:

AGP EXPRESSLY RESERVES ITS COPYRIGHT AND OTHER PROPERTY RIGHTS OF ALL PLANS AND DRAWINGS DESIGNED AND/OR PRODUCED. PLANS AND DRAWINGS ARE NOT TO BE REPRODUCED IN ANY FORM OR MANNER WITHOUT THE EXPRESSED WRITTEN CONSENT OF AGP.

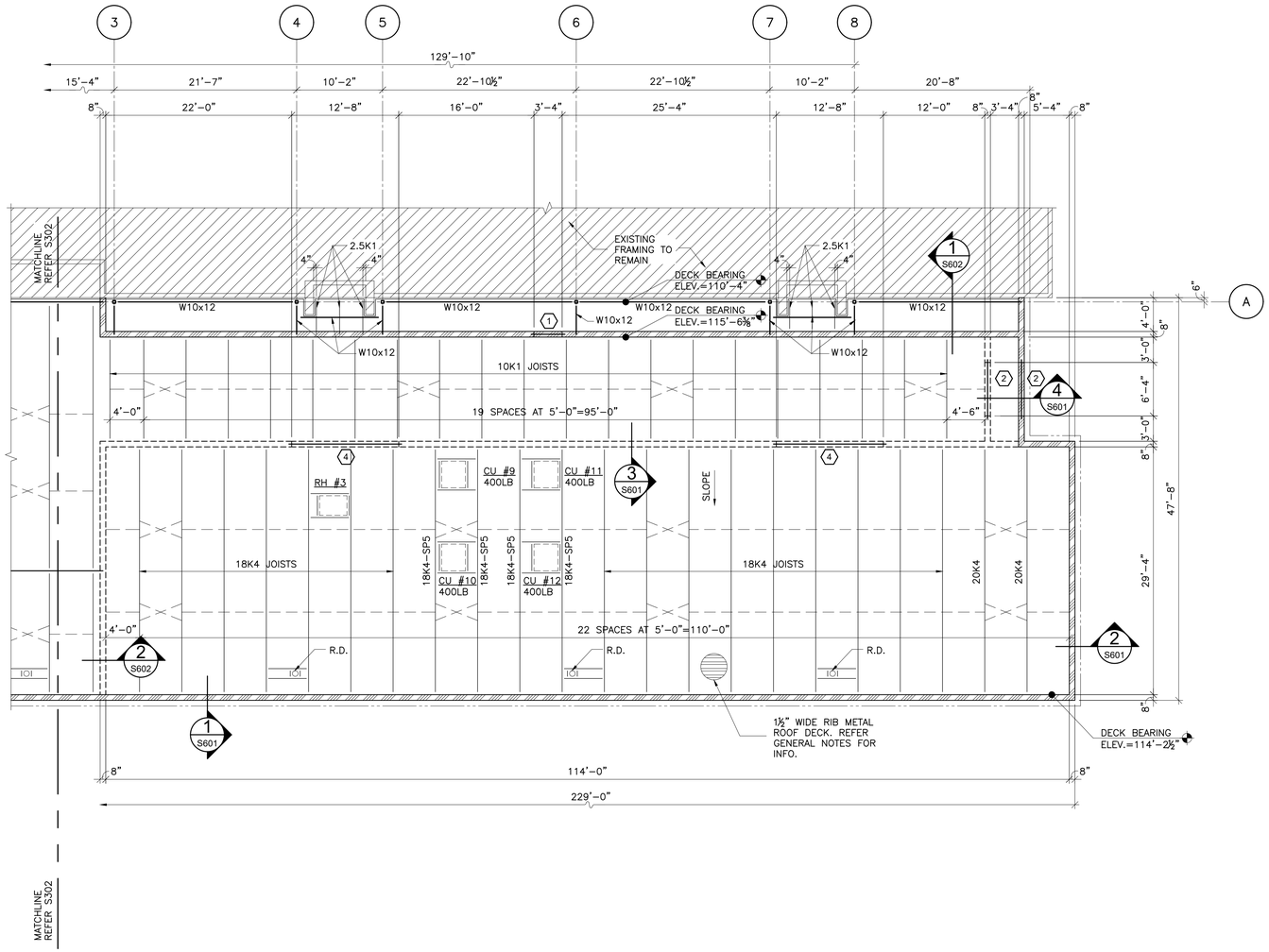

1 S303 FRAMING PLAN AREA C

SCALE: 1/8"=1'-0"

ROOF FRAMING PLAN NOTES:

1. ALL ELEVATIONS ARE REFERENCED FROM FINISHED FLOOR DATUM OF 100'-0". REFER FOUNDATION PLAN NOTES FOR ACTUAL ELEVATION.
2. REFER TO FOUNDATION PLAN FOR COLUMN SIZES.
3. ALL ROOF OPENINGS FOR MECHANICAL ROOF TOP UNITS ARE APPROXIMATELY LOCATED. EXACT SIZE AND LOCATIONS SHALL BE COORDINATED WITH THE SUCCESSFUL MECHANICAL CONTRACTOR. ALL ROOF/WALL OPENINGS SHALL BE SUPPORTED WITH TYPICAL ANGLE FRAME UNLESS NOTED OTHERWISE.
4. (27K) INDICATES MAXIMUM FACTORED BEAM END REACTION IN ACCORDANCE WITH THE AISC LRFD SPECIFICATION. IF NOT SHOWN, PROVIDE 10K MINIMUM CAPACITY. REFER TO TYPICAL CONNECTION DETAILS.
5. T.O. PARAPET REFERS TO THE TOP OF METAL STUD/MASONRY WALL ELEVATION WITH REFERENCE TO FINISH FLOOR ELEVATION SPECIFIED ON THE FOUNDATION PLAN U.N.O.
6. (1) DENOTES MASONRY LINTEL TYPE. REFER S104 FOR ADDITIONAL INFORMATION.

FRAMING PLAN LEGEND:

= L1¾x1¼x7/64 MIN. HORIZONTAL JOIST BRIDGING BY JOIST MANUFACTURER

= L1¾x1¼x7/64 MIN. JOIST X-BRIDGING BY JOIST MANUFACTURER

BEAM SIZE — W12x22

R20/25 — FACTORED END REACTION, KIPS

NOTE:
IF ONLY ONE NUMBER IS PROVIDED FOR END REACTIONS, REACTION APPLIES TO BOTH ENDS. WHERE NO REACTION IS GIVEN, USE 10K.

= LOAD BEARING MASONRY WALLS

= INTERIOR LOAD BEARING MASONRY WALLS

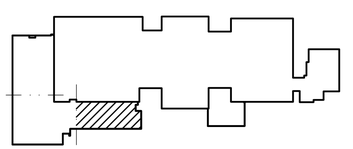

KEY PLAN

AGP
the Abla Griffin Partnership L.L.C.
201 N. BROADWAY
SUITE 210
MOORE, OK. 73160
405.735.3477
AGP@theAGP.net
www.theAGP.net

CEDAR CREEK
CIVIL

KFC ENGINEERING
STRUCTURAL

SALAS O'BRIEN
MECHANICAL / ELECTRICAL

PROFESSIONAL STRUCTURAL ENGINEER
BRANDON W. BIRCH
26145
OKLAHOMA
6/14/2023

CJC
drawn by

BWB
checked by

JULY 2023
date

revisions

MOORE PUBLIC SCHOOLS
BOARD OF EDUCATION
MOORE, OKLAHOMA

MOORE Public Schools
LEARNING FOR LIFE

CLASSROOM ADDITION
HIGHLAND WEST
JUNIOR HIGH SCHOOL

sheet no:

S303

KFC engineering
Kirkpatrick Forest Curtis PC
Structural Engineering
OK CA #3888, EXP. 06/30/25
525 Central Park Drive, Suite 202
Oklahoma City, OK. 73105
405.528.4596 | kfcengr.com

OWNERSHIP USE OF DOCUMENTS:

AGP EXPRESSLY RESERVES ITS COPYRIGHT AND OTHER PROPERTY RIGHTS OF ALL PLANS AND DRAWINGS DESIGNED AND/OR PRODUCED. PLANS AND DRAWINGS ARE NOT TO BE REPRODUCED IN ANY FORM OR MANNER WITHOUT THE EXPRESSED WRITTEN CONSENT OF AGP.

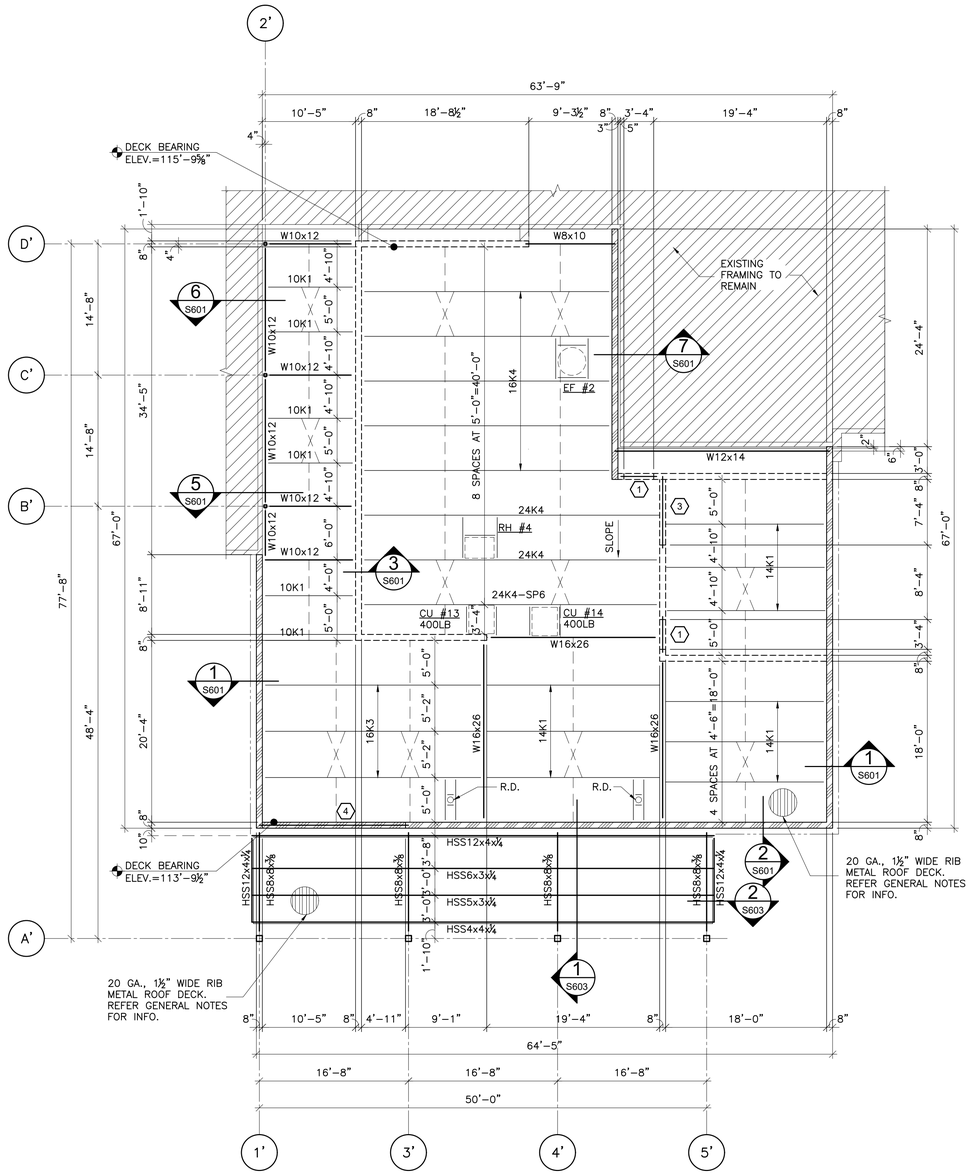

NORTH

1 S304 FRAMING PLAN AREA D

SCALE: 1/8"=1'-0"

NONSHELTER ROOF FRAMING PLAN NOTES:

1. ALL ELEVATIONS ARE REFERENCED FROM FINISHED FLOOR DATUM OF 100'-0". REFER FOUNDATION PLAN NOTES FOR ACTUAL ELEVATION.
2. REFER TO FOUNDATION PLAN FOR COLUMN SIZES.
3. ALL ROOF OPENINGS FOR MECHANICAL ROOF TOP UNITS ARE APPROXIMATELY LOCATED. EXACT SIZE AND LOCATIONS SHALL BE COORDINATED WITH THE SUCCESSFUL MECHANICAL CONTRACTOR. ALL ROOF/WALL OPENINGS SHALL BE SUPPORTED WITH TYPICAL ANGLE FRAME UNLESS NOTED OTHERWISE.
4. (27K) INDICATES MAXIMUM FACTORED BEAM END REACTION IN ACCORDANCE WITH THE AISC LRFD SPECIFICATION. IF NOT SHOWN, PROVIDE 10K MINIMUM CAPACITY. REFER TO TYPICAL CONNECTION DETAILS.
5. T.O. PARAPET REFERS TO THE TOP OF METAL STUD/MASONRY WALL ELEVATION WITH REFERENCE TO FINISH FLOOR ELEVATION SPECIFIED ON THE FOUNDATION PLAN U.N.O.
6. (1) DENOTES MASONRY LINTEL TYPE. REFER S104 FOR ADDITIONAL INFORMATION.

FRAMING PLAN LEGEND:

= L1¾x1¼x7/64 MIN. HORIZONTAL JOIST BRIDGING BY JOIST MANUFACTURER

= L1¾x1¼x7/64 MIN. JOIST X-BRIDGING BY JOIST MANUFACTURER

BEAM SIZE — W12x22 — R20/25 — FACTORED END REACTION, KIPS

NOTE:
IF ONLY ONE NUMBER IS PROVIDED FOR END REACTIONS, REACTION APPLIES TO BOTH ENDS. WHERE NO REACTION IS GIVEN, USE 10K.

= LOAD BEARING MASONRY WALLS

= INTERIOR LOAD BEARING MASONRY WALLS

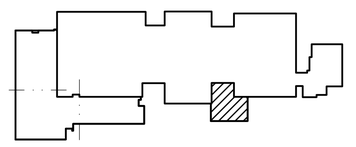

KEY PLAN

AGP
the Abla Griffin Partnership L.L.C.
201 N. BROADWAY
SUITE 210
MOORE, OK. 73160
405.735.3477
AGP@theAGP.net
www.theAGP.net

CEDAR CREEK
CIVIL

KFC ENGINEERING
STRUCTURAL

SALAS O'BRIEN
MECHANICAL / ELECTRICAL

PROFESSIONAL STRUCTURAL ENGINEER
BRANDON W. BIRCH
26145
OKLAHOMA
07/31/2023

KFC engineering
Kirkpatrick Forest Curtis PC
Structural Engineering
OK CA #3888, EXP. 06/30/25
525 Central Park Drive, Suite 202
Oklahoma City, OK. 73105
405.528.4596 | kfcengr.com

CJC
drawn by

BWB
checked by

JULY 2023
date

revisions

MOORE PUBLIC SCHOOLS
BOARD OF EDUCATION
MOORE, OKLAHOMA

MOORE Public Schools
LEARNING FOR LIFE

CLASSROOM ADDITION
HIGHLAND WEST
JUNIOR HIGH SCHOOL

sheet no:

S304

OWNERSHIP USE OF DOCUMENTS:

AGP EXPRESSLY RESERVES ITS COPYRIGHT AND OTHER PROPERTY RIGHTS OF ALL PLANS AND DRAWINGS DESIGNED AND/OR PRODUCED. PLANS AND DRAWINGS ARE NOT TO BE REPRODUCED IN ANY FORM OR MANNER WITHOUT THE EXPRESSED WRITTEN CONSENT OF AGP.

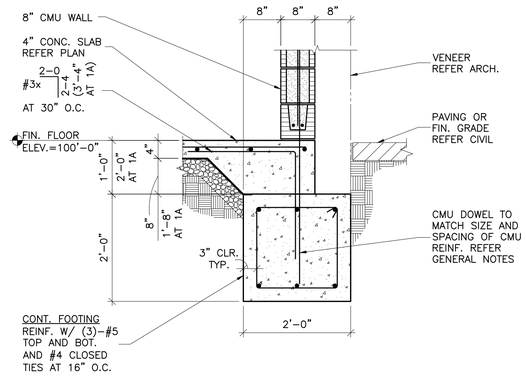

1 1A S501 S501 SECTION
SCALE: 3/4"=1'-0"

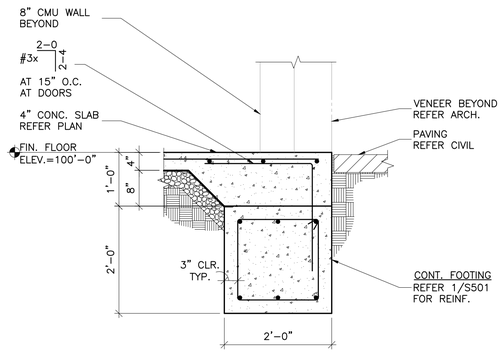

2 SECTION
S501 SCALE: 3/4"=1'-0"

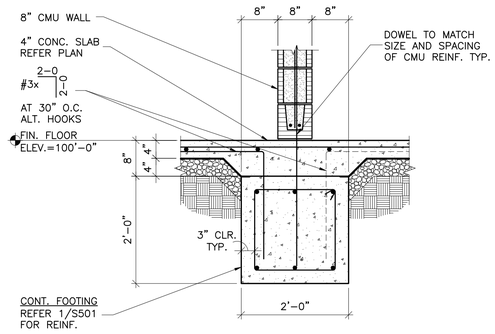

3 SECTION
S501 SCALE: 3/4"=1'-0"

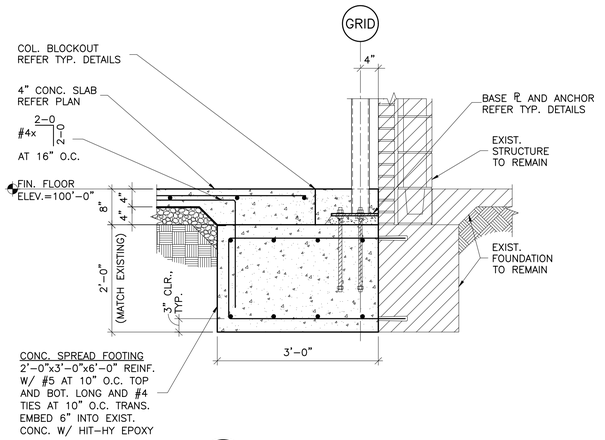

4 SECTION
S501 SCALE: 3/4"=1'-0"

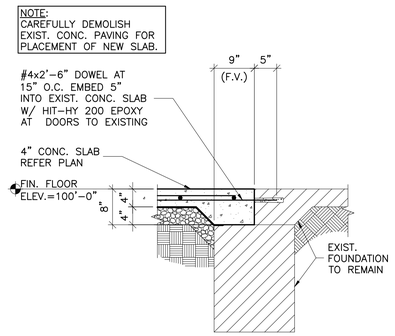

5 SECTION
S501 SCALE: 3/4"=1'-0"

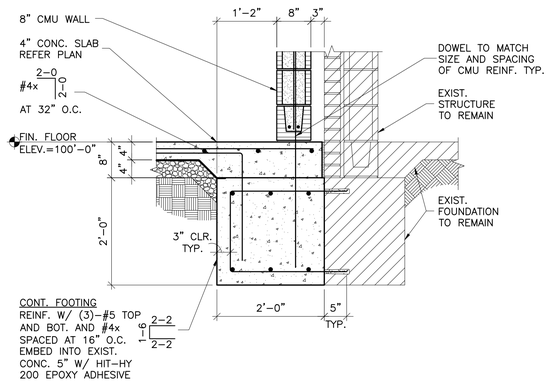

6 SECTION
S501 SCALE: 3/4"=1'-0"

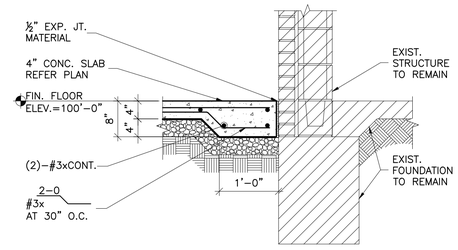

7 SECTION
S501 SCALE: 3/4"=1'-0"

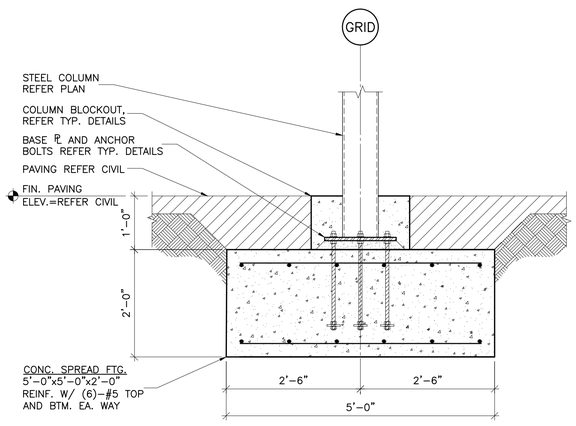

8 SECTION
S501 SCALE: 3/4"=1'-0"

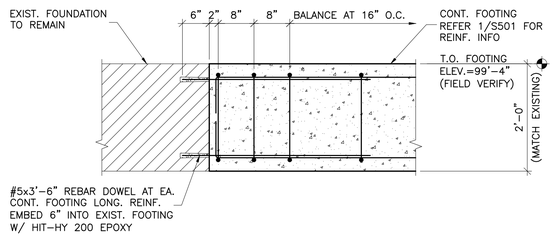

9 SECTION
S501 SCALE: 3/4"=1'-0"

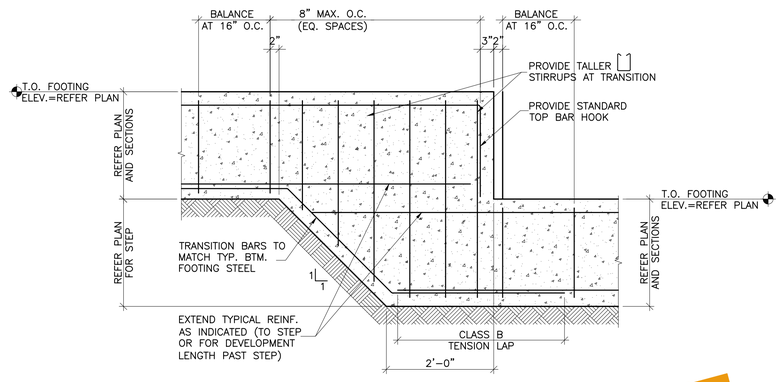

10 TYPICAL FOOTING STEP
S501 SCALE: 3/4"=1'-0"

AGP
the Abla Griffin Partnership L.L.C.
201 N. BROADWAY
SUITE 210
MOORE, OK. 73160
405.735.3477
AGP@theAGP.net
www.theAGP.net

CEDAR CREEK
CIVIL

KFC ENGINEERING
STRUCTURAL

SALAS O'BRIEN
MECHANICAL / ELECTRICAL

PROFESSIONAL STRUCTURAL ENGINEER
BRANDON W. BIRCH
26145
OKLAHOMA
6/14/2023

CJC
drawn by

BWB
checked by

JULY 2023
date

revisions

MOORE PUBLIC SCHOOLS
BOARD OF EDUCATION
MOORE, OKLAHOMA

MOORE Public Schools
LEARNING FOR LIFE

CLASSROOM ADDITION
HIGHLAND WEST
JUNIOR HIGH SCHOOL

sheet no:

S501

KFC engineering
Kirkpatrick Forest Curtis PC
Structural Engineering
OK CA #3888, EXP. 06/30/25
525 Central Park Drive, Suite 202
Oklahoma City, OK 73105
405.528.4596 | kfcengr.com

OWNERSHIP USE OF DOCUMENTS:

AGP EXPRESSLY RESERVES ITS COPYRIGHT AND OTHER PROPERTY RIGHTS OF ALL PLANS AND DRAWINGS DESIGNED AND/OR PRODUCED. PLANS AND DRAWINGS ARE NOT TO BE REPRODUCED IN ANY FORM OR MANNER WITHOUT THE EXPRESSED WRITTEN CONSENT OF AGP.

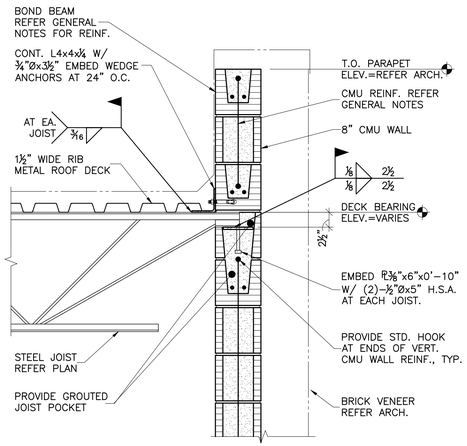

1 S601 **SECTION**
SCALE: 1"=1'-0"

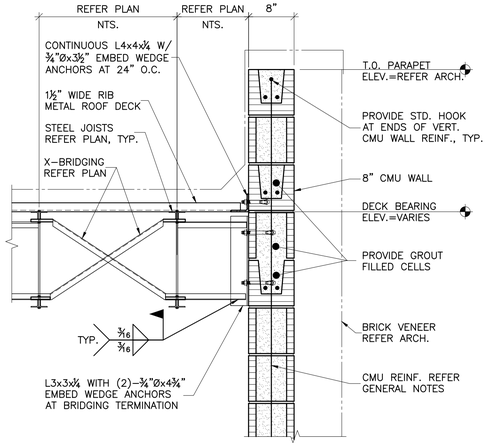

2 S601 **SECTION**
SCALE: 1"=1'-0"

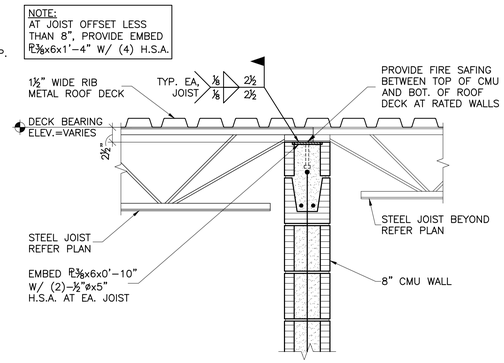

3 S601 **SECTION**
SCALE: 1"=1'-0"

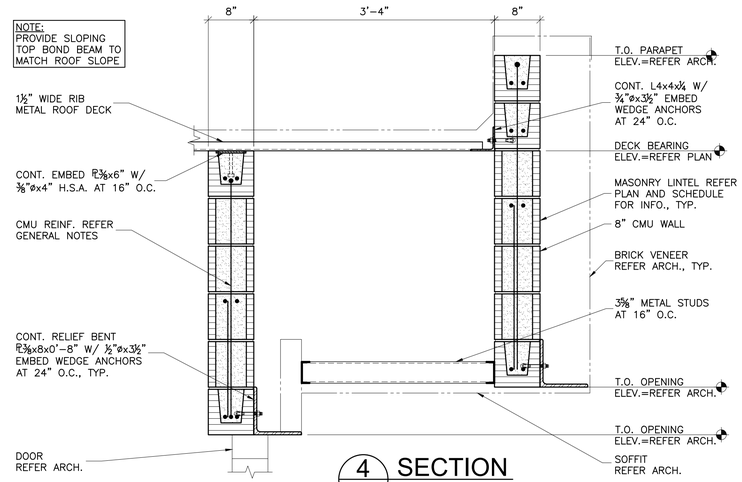

4 S601 **SECTION**
SCALE: 1"=1'-0"

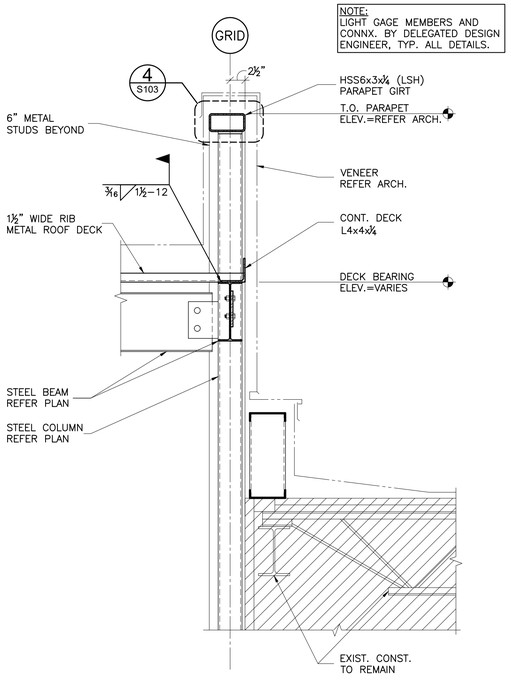

5 S601 **SECTION**
SCALE: 1"=1'-0"

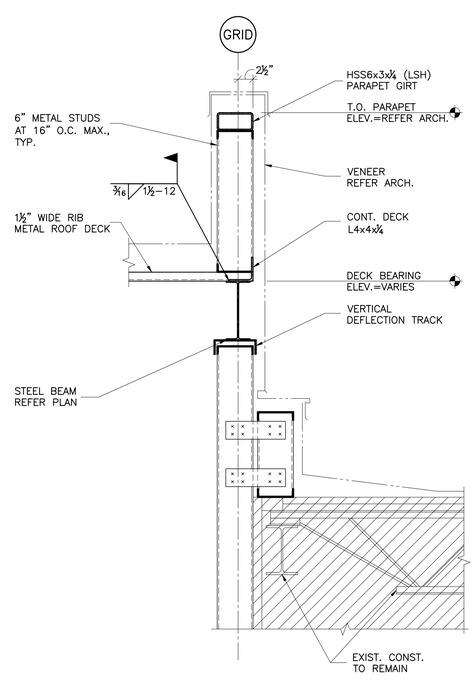

6 S601 **SECTION**
SCALE: 1"=1'-0"

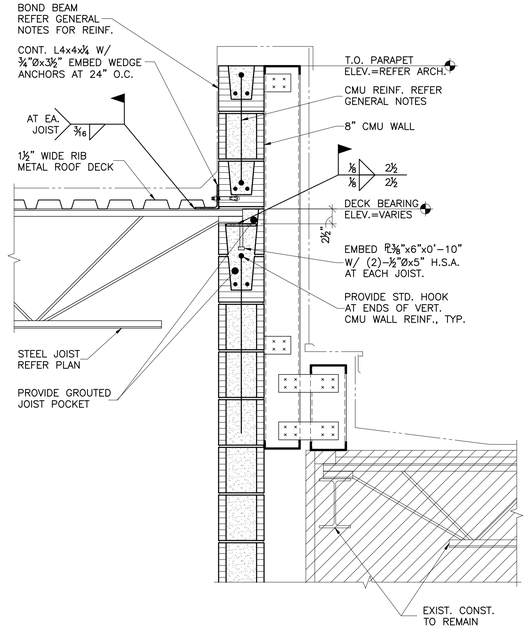

7 S601 **SECTION**
SCALE: 1"=1'-0"

AGP
the Abla Griffin Partnership L.L.C.
201 N. BROADWAY
SUITE 210
MOORE, OK. 73160
405.735.3477
AGP@theAGP.net
www.theAGP.net

CEDAR CREEK
CIVIL

KFC ENGINEERING
STRUCTURAL

SALAS O'BRIEN
MECHANICAL / ELECTRICAL

PROFESSIONAL STRUCTURAL ENGINEER
BRANDON W. BIRCH
26145
OKLAHOMA
6/14/2023

CJC
drawn by

BWB
checked by

JULY 2023
date

revisions

MOORE PUBLIC SCHOOLS
BOARD OF EDUCATION
MOORE, OKLAHOMA

MOORE Public Schools
LEARNING FOR LIFE

CLASSROOM ADDITION
HIGHLAND WEST
JUNIOR HIGH SCHOOL

sheet no:

S601

OWNERSHIP USE OF DOCUMENTS:

AGP EXPRESSLY RESERVES ITS COPYRIGHT AND OTHER PROPERTY RIGHTS OF ALL PLANS AND DRAWINGS DESIGNED AND/OR PRODUCED. PLANS AND DRAWINGS ARE NOT TO BE REPRODUCED IN ANY FORM OR MANNER WITHOUT THE EXPRESSED WRITTEN CONSENT OF AGP.

KFC engineering
Kirkpatrick Forest Curtis PC
Structural Engineering
OK CA #3888, EXP. 06/30/25
525 Central Park Drive, Suite 202
Oklahoma City, OK 73105
405.528.4596 | kfcengr.com

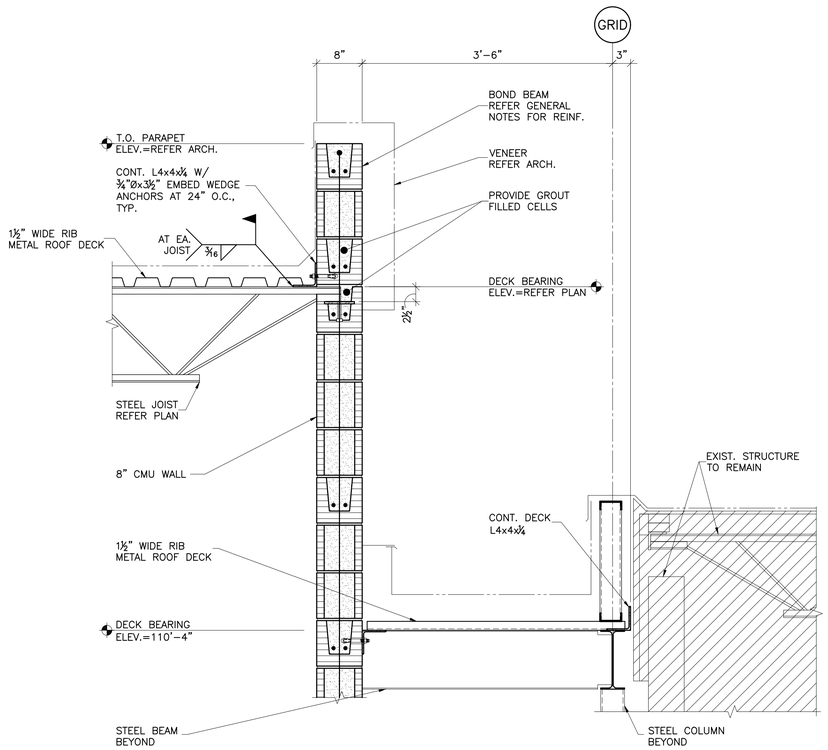

1 S602 **SECTION**
SCALE: 1"=1'-0"

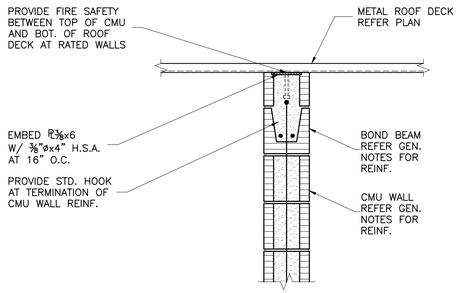

2 S602 **SECTION**
SCALE: 1"=1'-0"

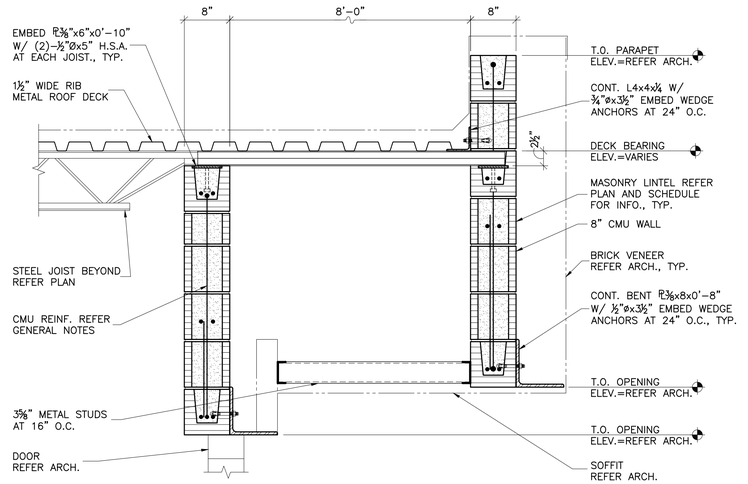

3 S602 **SECTION**
SCALE: 1"=1'-0"

NOTES:
1. AT JOIST OFFSET LESS THAN 8", PROVIDE EMBED R3⅜x6x1'–4" W/ (4) H.S.A.
2. REFER 2/601 FOR INFO SHOWN BUT NOT NOTED.

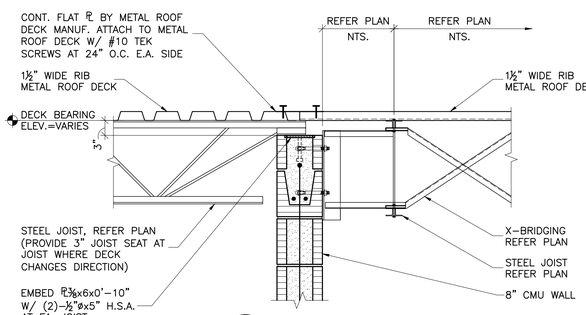

4 S602 **SECTION**
SCALE: 1"=1'-0"

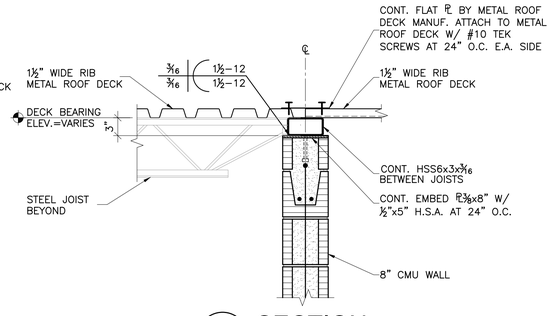

5 S602 **SECTION**
SCALE: 1"=1'-0"

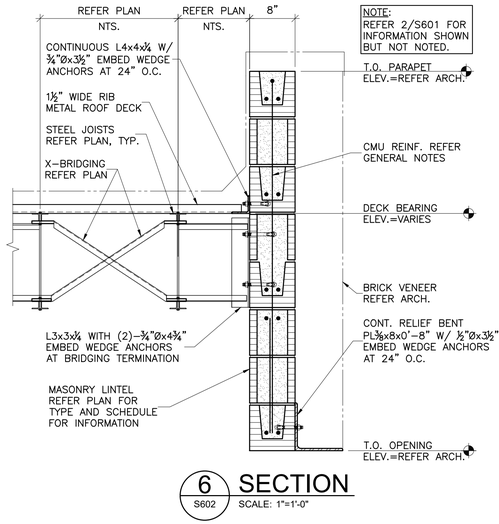

6 S602 **SECTION**
SCALE: 1"=1'-0"

AGP
the Abla Griffin Partnership L.L.C.
201 N. BROADWAY
SUITE 210
MOORE, OK. 73160
405.735.3477
AGP@theAGP.net
www.theAGP.net

CEDAR CREEK
CIVIL
KFC ENGINEERING
STRUCTURAL
SALAS O'BRIEN
MECHANICAL / ELECTRICAL

PROFESSIONAL STRUCTURAL ENGINEER
BRANDON W. BIRCH
26145
OKLAHOMA
6/30/2023

CJC — drawn by
BWB — checked by
JULY 2023 — date
revisions

MOORE PUBLIC SCHOOLS
BOARD OF EDUCATION
MOORE, OKLAHOMA

MOORE Public Schools
LEARNING FOR LIFE

CLASSROOM ADDITION
HIGHLAND WEST
JUNIOR HIGH SCHOOL

sheet no:

S602

KFC engineering
Kirkpatrick Forest Curtis PC
Structural Engineering
OK CA #3888, EXP. 06/30/25
525 Central Park Drive, Suite 202
Oklahoma City, OK 73105
405.528.4596 | kfcengr.com

OWNERSHIP USE OF DOCUMENTS:

AGP EXPRESSLY RESERVES ITS COPYRIGHT AND OTHER PROPERTY RIGHTS OF ALL PLANS AND DRAWINGS DESIGNED AND/OR PRODUCED. PLANS AND DRAWINGS ARE NOT TO BE REPRODUCED IN ANY FORM OR MANNER WITHOUT THE EXPRESSED WRITTEN CONSENT OF AGP.

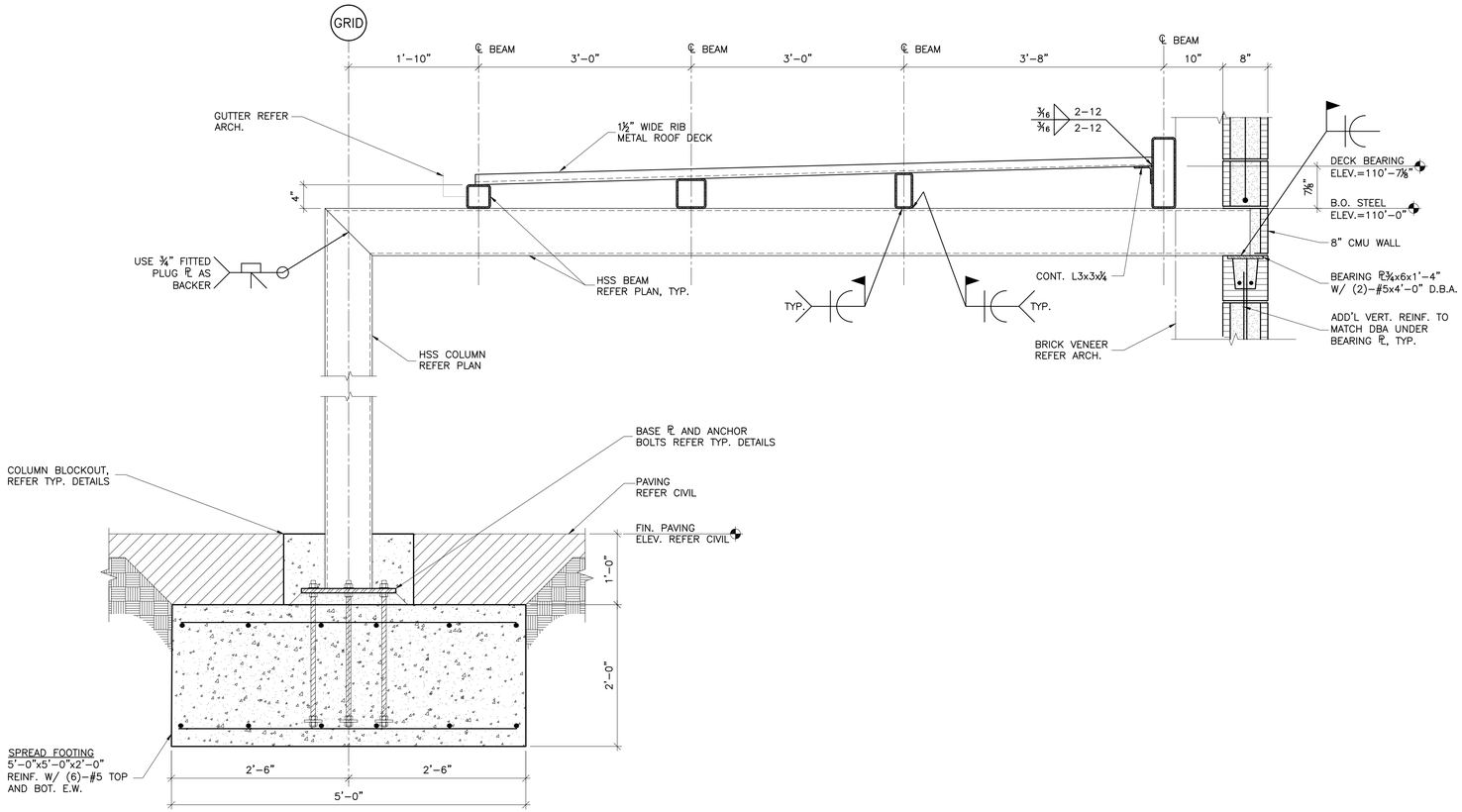

1 S603 SECTION
SCALE: 1"=1'-0"

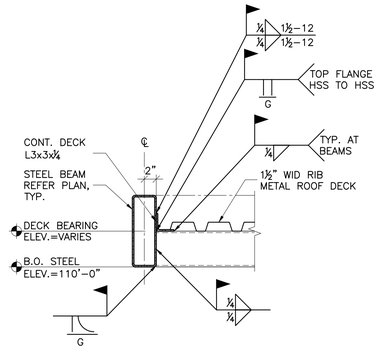

2 S603 SECTION
SCALE: 1"=1'-0"

AGP
the Abla Griffin Partnership L.L.C.
201 N. BROADWAY
SUITE 210
MOORE, OK. 73160
405.735.3477
AGP@theAGP.net
www.theAGP.net

CEDAR CREEK
CIVIL

KFC ENGINEERING
STRUCTURAL

SALAS O'BRIEN
MECHANICAL / ELECTRICAL

PROFESSIONAL STRUCTURAL ENGINEER
BRANDON W. BIRCH
26145
OKLAHOMA
6/14/2023

CJC
drawn by

BWB
checked by

JULY 2023
date

revisions

MOORE PUBLIC SCHOOLS
BOARD OF EDUCATION
MOORE, OKLAHOMA

MOORE Public Schools
LEARNING FOR LIFE

CLASSROOM ADDITION
HIGHLAND WEST
JUNIOR HIGH SCHOOL

sheet no:

S603

KFC engineering
Kirkpatrick Forest Curtis PC
Structural Engineering
OK CA #3888, EXP. 06/30/25
525 Central Park Drive, Suite 202
Oklahoma City, OK. 73105
405.528.4596 | kfcengr.com

OWNERSHIP USE OF DOCUMENTS:

AGP EXPRESSLY RESERVES ITS COPYRIGHT AND OTHER PROPERTY RIGHTS OF ALL PLANS AND DRAWINGS DESIGNED AND/OR PRODUCED. PLANS AND DRAWINGS ARE NOT TO BE REPRODUCED IN ANY FORM OR MANNER WITHOUT THE EXPRESSED WRITTEN CONSENT OF AGP.

STORM WATER DRAINAGE COMPOSITION REPORT

For

Highland West Jr high Classroom Addition

Moore, OK

Submitted July 26, 2023
Revised September 25, 2023

I HEREBY CERTIFY THAT THIS REPORT FOR THE DRAINAGE DESIGN OF HIGHLAND WEST JR HIGH WAS PREPARED BY ME (OR UNDER MY DIRECT SUPERVISION) IN ACCORDANCE WITH THE PROVISIONS OF CITY OF MOORE STORMWATER DESIGN CRITERIA MANUAL FOR THE OWNERS THEREOF.

STATE OF OK # 24273
DATE 09.25.23
CA # 5864

Prepared by:

CEDAR CREEK
Engineering • Planning • Consulting

STORM WATER DRAINAGE COMPOSITION REPORT

July 26, 2023
Revised September 25, 2023

Highland West Jr High Classroom addition
Moore, OK
Cedar Creek Project # 23069

PROJECT DESCRIPTION

The following is the Storm Water Drainage Composition Report for the construction of the proposed Highland West Jr high classroom addition in Moore, Oklahoma. The drainage area considered in this development, is approximately 1.176 acres. This design and report is only accounting for the offset of the proposed additional impervious area.

This report will act as an accounting of the pond release in comparison to its current state, showing the total flow leaving the site will not increase as part of the development of the subject areas.

CURRENT SITE CONDITIONS

The existing subject area on site consists of 1.176 acres of currently developed school area. Of the 1.176 acres, approximately 0.384 acres is currently impervious. The remaining 0.792 acres is greater than 75% grass cover.

The runoff CN value for the site was taken as weighted developed area with Hydrologic Soil Group 'D'. With the Corresponding CN value of 80, the existing site releases stormwater according to the table below:

EXISTING FLOW TABLE

	CN	Area (ac)	Tc (min)	Q100 (cfs)	Pond Elevation
Existing Site	86	1.254	5	15.93	---
*Q100 FROM HYDROCAD CALCULATIONS * TC used a min of 5 min.					

DEVELOPED CONDITIONS

The site will be developed to add additional classrooms and offices. The office addition increase in runoff will discharge at grade, and be considered bypass to the pond. The classroom addition will be collected entirely underground, and carried to a proposed detention pond at the SE corner of the site. The detention pond will discharge to an existing trickle channel that runs west to east, at the southern portion of the site.

Per the new construction and the new detention pond , the flows are presented below:

Rainfall depth-duration estimates taken from City of Moore SMC table 3.

COMPARISON OF PEAK FLOWS

	Area (acres)	Tc (minutes)	Peak Flow (Q100)	Peak Pond Elevation
Proposed Classrooms (into pond)	1.168	5	8.68	1242.23’
Pr bypass	0.086	5	1.17	---
Existing Site (from above)	1.254	---	15.93	---
Change in Flow	---	---	-6.44 cfs	---

The peak flow for the proposed development will be reduced to below the existing values via the proposed detention pond. The proposed outfall structure consists of a headwall with a 15.5” metal plate orifice, attached to a headwall discharging through an 18” culvert pipe. Per the attached HydroCAD report, the impact on the onsite storage is summarized below (optimized for maximum pond volume).

DETENTION POND INFORMATION (100 year storm)

STRM	Volume required	Volume provided	% used	Q100 (cfs) (pond out)	Peak Elevation	Outfall Size and Type
2	1,840	10,436	17	4.35	1240.86’	15.5” orifice
5	2,340	10,436	22	5.39	1241.07’	15.5” orifice
10	2,914	10,436	27	6.13	1241.28’	15.5” orifice
50	4,911	10,436	47	7.92	1241.92’	15.5” orifice
100	6,081	10,436	58	8.68	1242.23’	15.5” orifice
*FROM HYDROCAD CALCULATIONS						

Conclusions

Based on the provided site data, the proposed adjustment to the drainage basins is not anticipated to have an adverse impact on capacity or competence of the downstream drainage facilities. Further, development of the site as proposed is in keeping with the intent of the approved design.

National Flood Hazard Layer FIRMette

FEMA

97°31'5"W 35°20'54"N

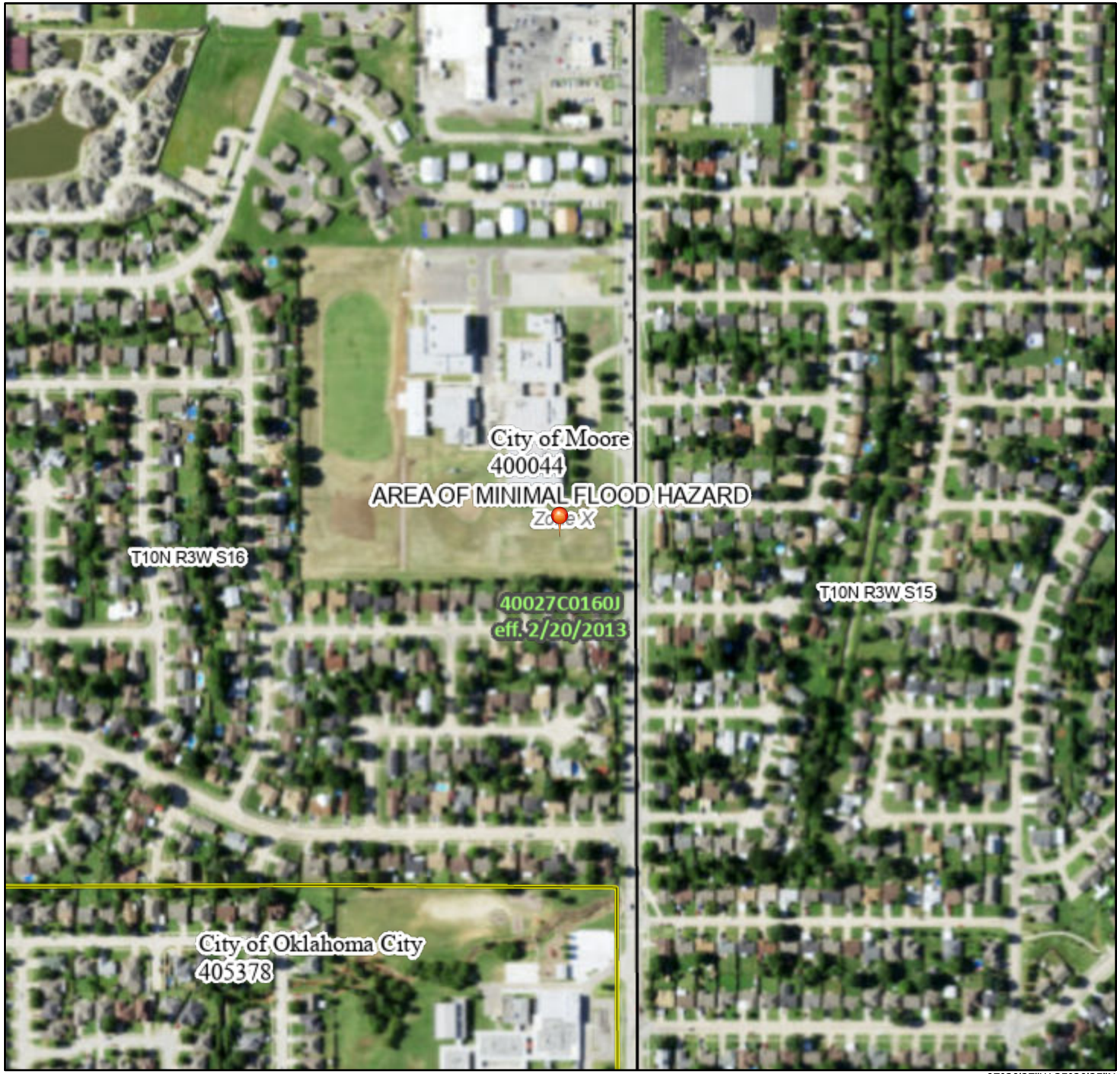

97°30'27"W 35°20'25"N

Feet

0 250 500 1,000 1,500 2,000

1:6,000

Basemap Imagery Source: USGS National Map 2023

Legend

SEE FIS REPORT FOR DETAILED LEGEND AND INDEX MAP FOR FIRM PANEL LAYOUT

SPECIAL FLOOD HAZARD AREAS
- Without Base Flood Elevation (BFE) *Zone A, V, A99*
- With BFE or Depth *Zone AE, AO, AH, VE, AR*
- Regulatory Floodway

OTHER AREAS OF FLOOD HAZARD
- 0.2% Annual Chance Flood Hazard, Areas of 1% annual chance flood with average depth less than one foot or with drainage areas of less than one square mile *Zone X*
- Future Conditions 1% Annual Chance Flood Hazard *Zone X*
- Area with Reduced Flood Risk due to Levee. See Notes. *Zone X*
- Area with Flood Risk due to Levee *Zone D*

OTHER AREAS
- NO SCREEN Area of Minimal Flood Hazard *Zone X*
- Effective LOMRs
- Area of Undetermined Flood Hazard *Zone D*

GENERAL STRUCTURES
- Channel, Culvert, or Storm Sewer
- Levee, Dike, or Floodwall

OTHER FEATURES
- 20.2 Cross Sections with 1% Annual Chance
- 17.5 Water Surface Elevation
- Coastal Transect
- Base Flood Elevation Line (BFE)
- Limit of Study
- Jurisdiction Boundary
- Coastal Transect Baseline
- Profile Baseline
- Hydrographic Feature

MAP PANELS
- Digital Data Available
- No Digital Data Available
- Unmapped

N

The pin displayed on the map is an approximate point selected by the user and does not represent an authoritative property location.

This map complies with FEMA's standards for the use of digital flood maps if it is not void as described below. The basemap shown complies with FEMA's basemap accuracy standards

The flood hazard information is derived directly from the authoritative NFHL web services provided by FEMA. This map was exported on 9/25/2023 at 3:18 PM and does not reflect changes or amendments subsequent to this date and time. The NFHL and effective information may change or become superseded by new data over time.

This map image is void if the one or more of the following map elements do not appear: basemap imagery, flood zone labels, legend, scale bar, map creation date, community identifiers, FIRM panel number, and FIRM effective date. Map images for unmapped and unmodernized areas cannot be used for regulatory purposes.

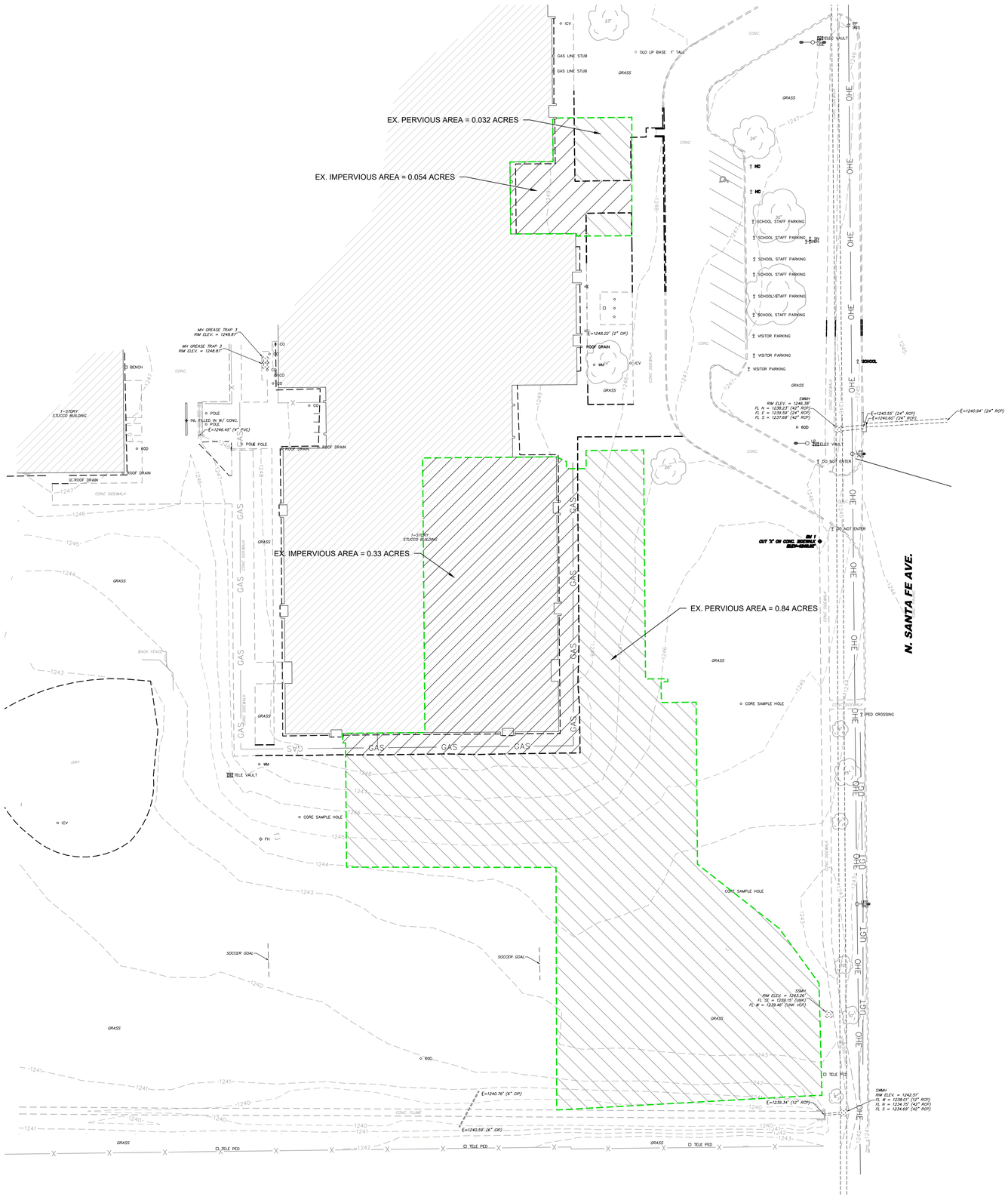

DRAINAGE LEGEND

EXISTING PERVIOUS CN = 80

EXISTING IMPERVIOUS CN = 98

N

SCALE IN FEET

0 30' 45' 60'

BEFORE YOU DIG CALL OKIE 811

CEDAR CREEK
ENGINEERING • PLANNING • CONSULTING
P.O. Box 14534 Oklahoma City, OK 73113
405-778-3385
www.cedarcreekinc.com
OK CA 5864
EXP. 06/30/24

LOCATION MAP:

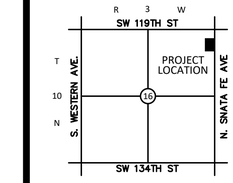

NOT TO SCALE

PROJECT:

HIGHLAND WEST JR. HIGH

901 N. SANTA FE
MOORE, OK

PROJECT NUMBER:	23069
DRAWING DATE:	09.25.23
ISSUE DATE:	09.25.23

SEAL:

SUBMITTAL:

PERMIT SET

REVISIONS:

MARK	DATE	DESCRIPTION

THESE PLANS AND DRAWINGS ARE NOT TO BE REPRODUCED, CHANGED OR COPIED IN ANY FORM OR MANNER WHATSOEVER WITHOUT FIRST OBTAINING THE WRITTEN PERMISSION AND CONSENT OF CEDAR CREEK CONSULTING INC. THIS SHEET IS NOT TO BE USED FOR CONSTRUCTION UNLESS THE ISSUE DATE IN THE TITLE BLOCK COINCIDES WITH OR POST DATES THE DRAWING DATE. ANY CHANGES MADE FROM THESE PLANS WITHOUT CONSENT OF CEDAR CREEK CONSULTING INC. ARE UNAUTHORIZED, AND SHALL RELIEVE CEDAR CREEK CONSULTING OF RESPONSIBILITY FOR ALL CONSEQUENCES ARRIVING OUT OF SUCH CHANGES.

DRAWING TITLE:

DRAINAGE - HISTORIC

SHEET:

C3.01

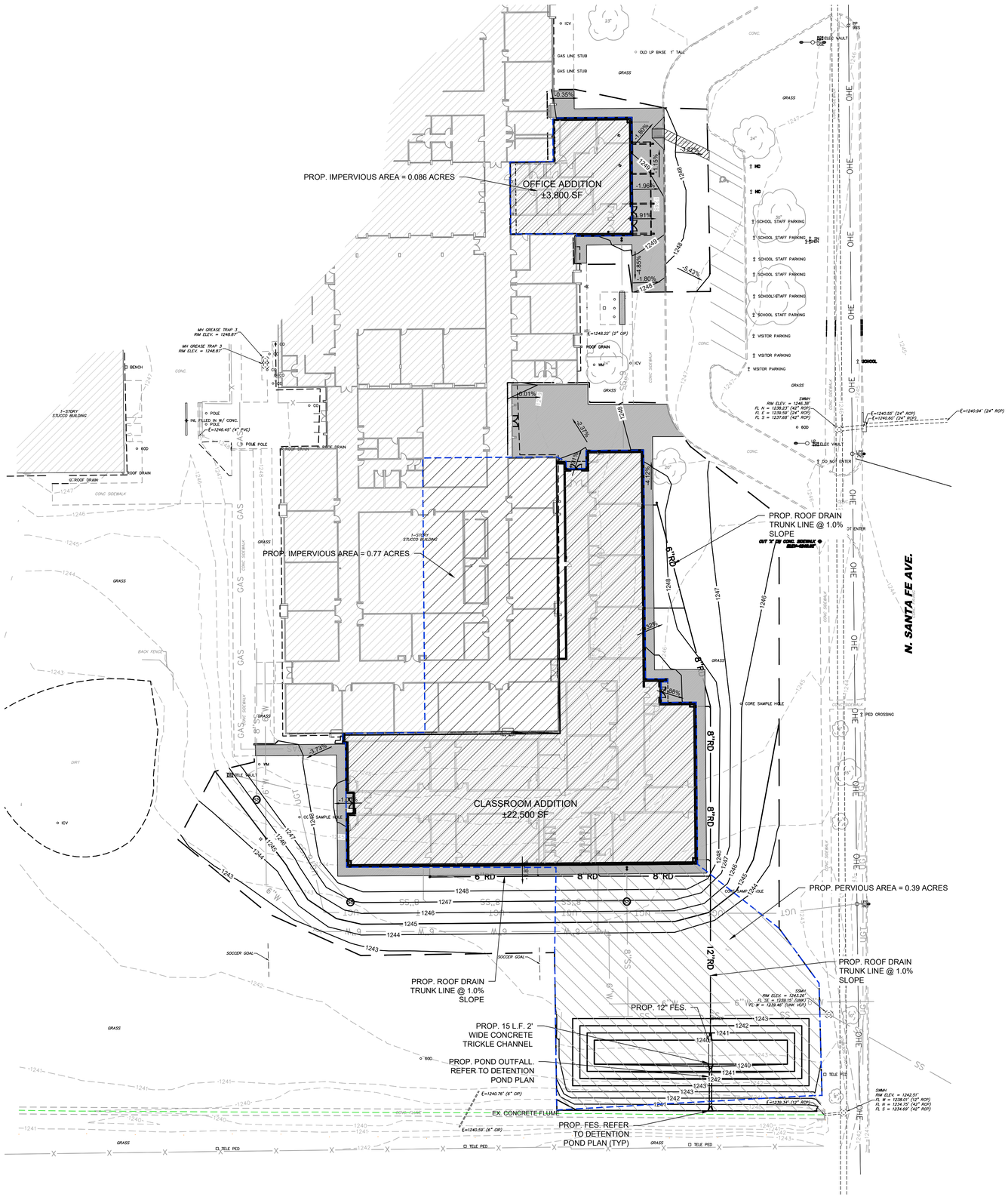

DRAINAGE LEGEND

- PROPOSED PERVIOUS CN = 80
- PROPOSED IMPERVIOUS CN = 98

SCALE IN FEET
0 30' 45' 60'

BEFORE YOU DIG CALL OKIE 811

CEDAR CREEK
ENGINEERING • PLANNING • CONSULTING
P.O. Box 14534 Oklahoma City, OK 73113
405-778-3385
www.cedarcreekinc.com
OK CA 5864
EXP. 06/30/24

LOCATION MAP:

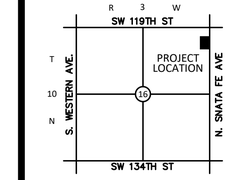

NOT TO SCALE

PROJECT:

HIGHLAND WEST JR. HIGH

901 N. SANTA FE
MOORE, OK

PROJECT NUMBER:	23069
DRAWING DATE:	09.25.23
ISSUE DATE:	09.25.23

SEAL:

SUBMITTAL:

PERMIT SET

REVISIONS:

MARK	DATE	DESCRIPTION

THESE PLANS AND DRAWINGS ARE NOT TO BE REPRODUCED, CHANGED OR COPIED IN ANY FORM OR MANNER WHATSOEVER WITHOUT FIRST OBTAINING THE WRITTEN PERMISSION AND CONSENT OF CEDAR CREEK CONSULTING INC. THIS SHEET IS NOT TO BE USED FOR CONSTRUCTION UNLESS THE ISSUE DATE IN THE TITLE BLOCK COINCIDES WITH OR POST DATES THE DRAWING DATE. ANY CHANGES MADE FROM THESE PLANS WITHOUT CONSENT OF CEDAR CREEK CONSULTING INC. ARE UNAUTHORIZED, AND SHALL RELIEVE CEDAR CREEK CONSULTING OF RESPONSIBILITY FOR ALL CONSEQUENCES ARRIVING OUT OF SUCH CHANGES.

DRAWING TITLE:

DRAINAGE - DEVELOPED

SHEET:

C3.02

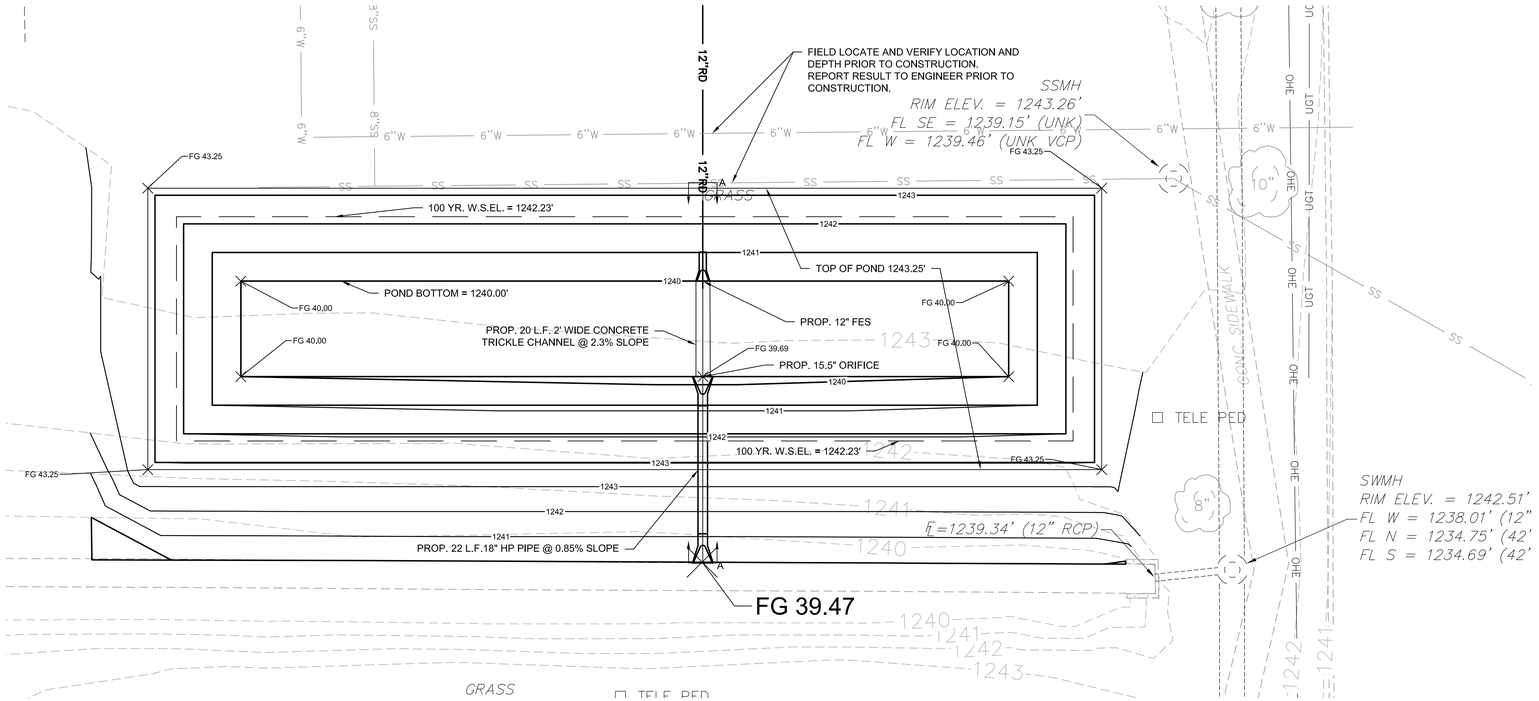

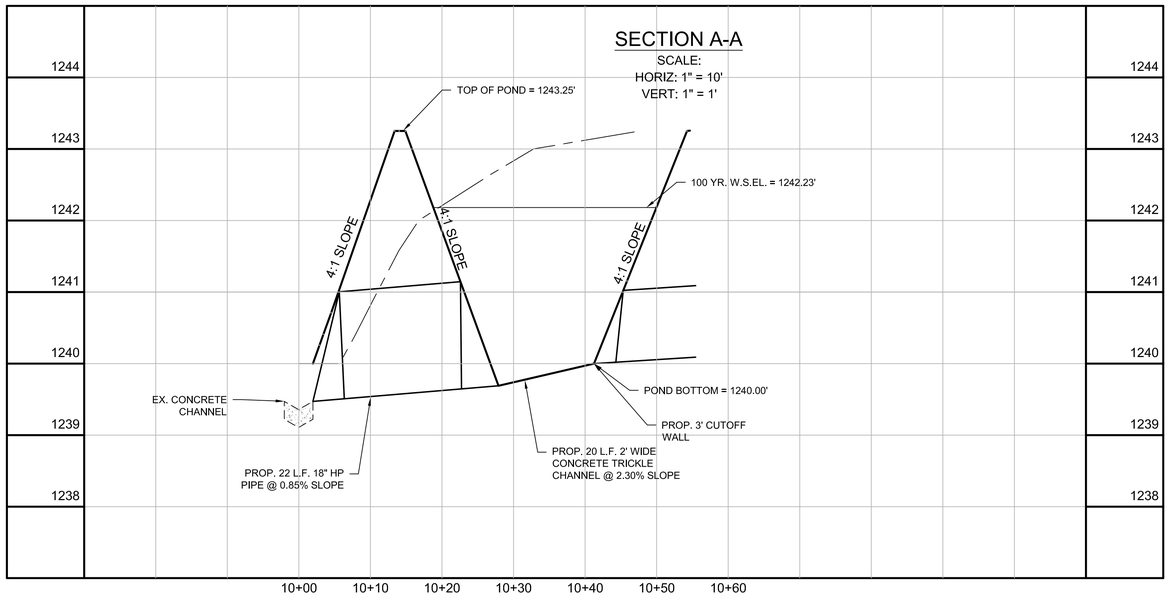

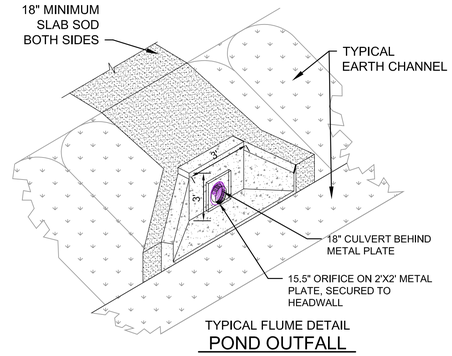

TYPICAL FLUME DETAIL

POND OUTFALL

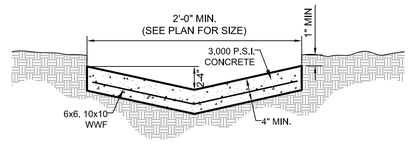

TRICKLE CHANNEL DETAIL

NOT TO SCALE

BEFORE YOU DIG 811 CALL OKIE

CEDAR CREEK
ENGINEERING • PLANNING • CONSULTING
P.O. Box 14534 Oklahoma City, OK 73113
405-778-3385
www.cedarcreekinc.com
OK CA 5864
EXP. 06/30/24

LOCATION MAP:

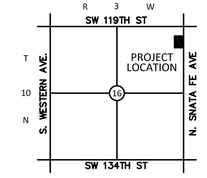

NOT TO SCALE

PROJECT:

HIGHLAND WEST JR. HIGH

901 N. SANTA FE
MOORE, OK

PROJECT NUMBER: 23069
DRAWING DATE: 09.25.23
ISSUE DATE: 09.25.23

SEAL:

SUBMITTAL:

PERMIT SET

REVISIONS:

MARK	DATE	DESCRIPTION

THESE PLANS AND DRAWINGS ARE NOT TO BE REPRODUCED, CHANGED OR COPIED IN ANY FORM OR MANNER WHATSOEVER WITHOUT FIRST OBTAINING THE WRITTEN PERMISSION AND CONSENT OF CEDAR CREEK CONSULTING INC. THIS SHEET IS NOT TO BE USED FOR CONSTRUCTION UNLESS THE ISSUE DATE IN THE TITLE BLOCK COINCIDES WITH OR POST DATES THE DRAWING DATE. ANY CHANGES MADE FROM THESE PLANS WITHOUT CONSENT OF CEDAR CREEK CONSULTING INC. ARE UNAUTHORIZED, AND SHALL RELIEVE CEDAR CREEK CONSULTING OF RESPONSIBILITY FOR ALL CONSEQUENCES ARRIVING OUT OF SUCH CHANGES.

DRAWING TITLE:

DETENTION POND PLAN

SHEET:

C3.03

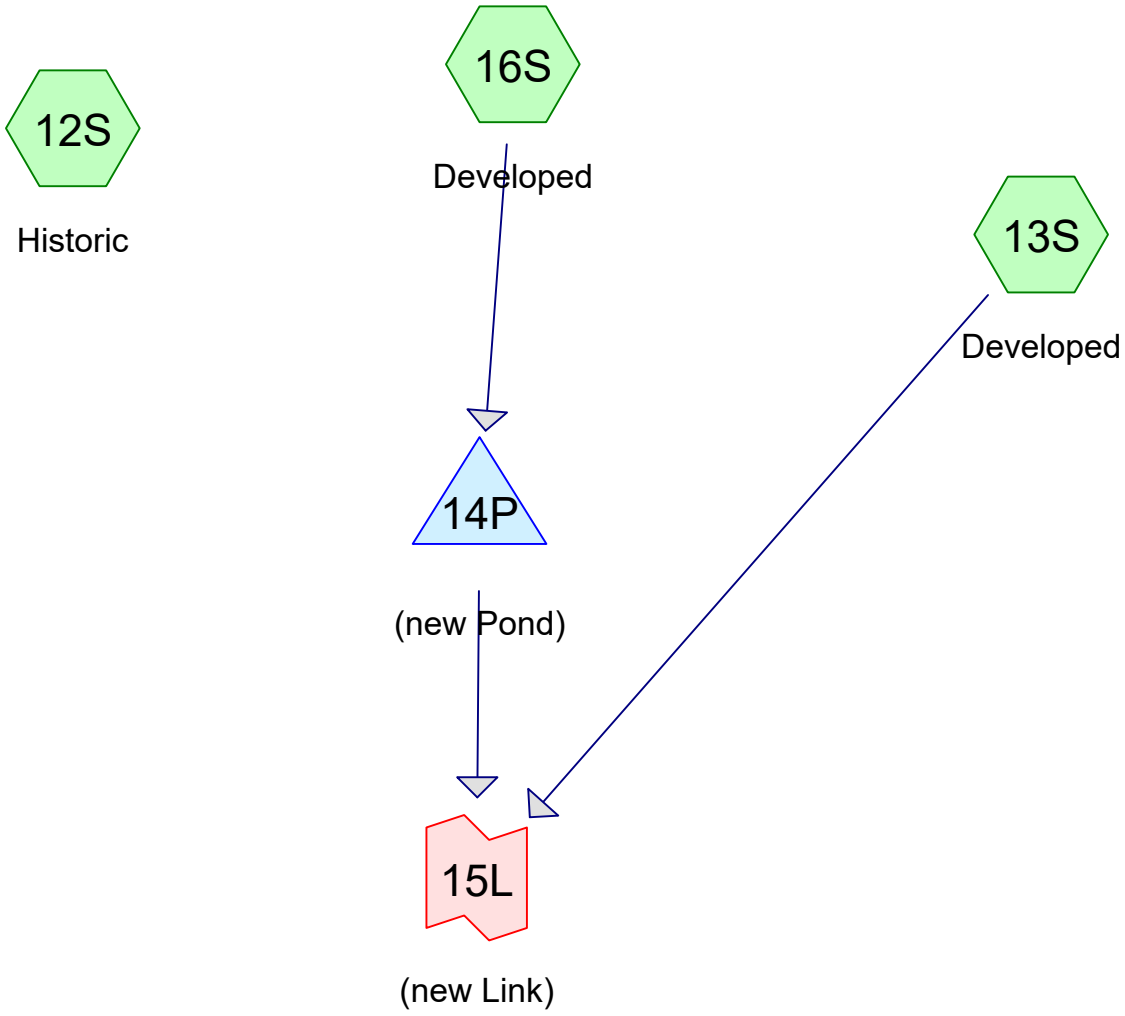

Subcat Reach Pond Link

Routing Diagram for Highland west detention9.25.23
Prepared by {enter your company name here}, Printed 9/25/2023
HydroCAD® 10.00-20 s/n 07286 © 2017 HydroCAD Software Solutions LLC

Summary for Subcatchment 12S: Historic

Runoff = 4.74 cfs @ 11.96 hrs, Volume= 0.202 af, Depth> 1.93"

Runoff by SCS TR-20 method, UH=SCS, Weighted-CN, Time Span= 5.00-20.00 hrs, dt= 0.02 hrs
Type II 24-hr 2 year Rainfall=3.48"

Area (ac)	CN	Description
0.384	98	Paved parking, HSG D
0.870	80	>75% Grass cover, Good, HSG D
1.254	86	Weighted Average
0.870		69.38% Pervious Area
0.384		30.62% Impervious Area

Tc (min)	Length (feet)	Slope (ft/ft)	Velocity (ft/sec)	Capacity (cfs)	Description
5.0					**Direct Entry, Minimum**

Subcatchment 12S: Historic

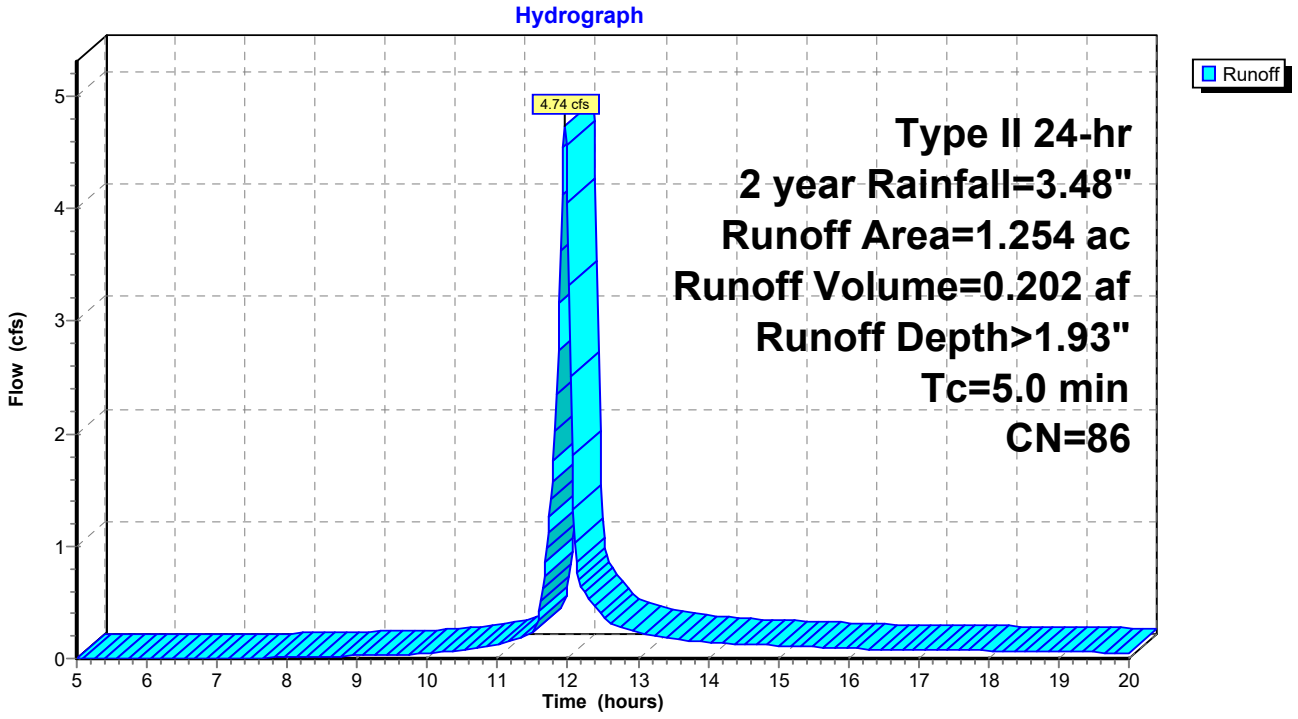

Hydrograph for Subcatchment 12S: Historic

Time (hours)	Precip. (inches)	Excess (inches)	Runoff (cfs)
5.00	0.22	0.00	0.00
5.20	0.23	0.00	0.00
5.40	0.24	0.00	0.00
5.60	0.25	0.00	0.00
5.80	0.27	0.00	0.00
6.00	0.28	0.00	0.00
6.20	0.29	0.00	0.00
6.40	0.30	0.00	0.00
6.60	0.32	0.00	0.00
6.80	0.33	0.00	0.00
7.00	0.34	0.00	0.00
7.20	0.36	0.00	0.00
7.40	0.37	0.00	0.00
7.60	0.39	0.00	0.01
7.80	0.40	0.00	0.01
8.00	0.42	0.00	0.01
8.20	0.43	0.01	0.01
8.40	0.45	0.01	0.01
8.60	0.47	0.01	0.02
8.80	0.49	0.02	0.02
9.00	0.51	0.02	0.03
9.20	0.53	0.02	0.03
9.40	0.56	0.03	0.03
9.60	0.58	0.03	0.03
9.80	0.60	0.04	0.04
10.00	0.63	0.05	0.05
10.20	0.66	0.06	0.06
10.40	0.69	0.07	0.07
10.60	0.73	0.08	0.08
10.80	0.77	0.10	0.10
11.00	0.82	0.11	0.12
11.20	0.87	0.14	0.16
11.40	0.94	0.17	0.21
11.60	1.07	0.23	0.42
11.80	1.50	0.49	**1.77**
12.00	2.31	1.09	**4.05**
12.20	2.43	1.19	0.63
12.40	2.52	1.26	0.46
12.60	2.59	1.32	0.32
12.80	2.64	1.36	0.27
13.00	2.69	1.40	0.24
13.20	2.73	1.43	0.21
13.40	2.76	1.46	0.19
13.60	2.80	1.49	0.17
13.80	2.83	1.51	0.16
14.00	2.85	1.54	0.14
14.20	2.88	1.56	0.13
14.40	2.90	1.58	0.13
14.60	2.93	1.60	0.12
14.80	2.95	1.62	0.12
15.00	2.97	1.64	0.11
15.20	2.99	1.65	0.11
15.40	3.01	1.67	0.10
15.60	3.03	1.69	0.10
15.80	3.05	1.70	0.09
16.00	3.06	1.72	0.09
16.20	3.08	1.73	0.09
16.40	3.09	1.74	0.08
16.60	3.11	1.76	0.08
16.80	3.12	1.77	0.08
17.00	3.14	1.78	0.08
17.20	3.15	1.79	0.08
17.40	3.17	1.81	0.08
17.60	3.18	1.82	0.07
17.80	3.19	1.83	0.07
18.00	3.21	1.84	0.07
18.20	3.22	1.85	0.07
18.40	3.23	1.86	0.07
18.60	3.24	1.87	0.06
18.80	3.25	1.88	0.06
19.00	3.26	1.89	0.06
19.20	3.27	1.90	0.06
19.40	3.28	1.91	0.06
19.60	3.29	1.92	0.05
19.80	3.30	1.93	0.05
20.00	**3.31**	**1.93**	0.05

Summary for Subcatchment 13S: Developed

Runoff = 0.44 cfs @ 11.96 hrs, Volume= 0.021 af, Depth> 3.00"

Runoff by SCS TR-20 method, UH=SCS, Weighted-CN, Time Span= 5.00-20.00 hrs, dt= 0.02 hrs
Type II 24-hr 2 year Rainfall=3.48"

Area (ac)	CN	Description
0.086	98	Paved parking, HSG D
0.086		100.00% Impervious Area

Tc (min)	Length (feet)	Slope (ft/ft)	Velocity (ft/sec)	Capacity (cfs)	Description
5.0					**Direct Entry, Minimum**

Subcatchment 13S: Developed

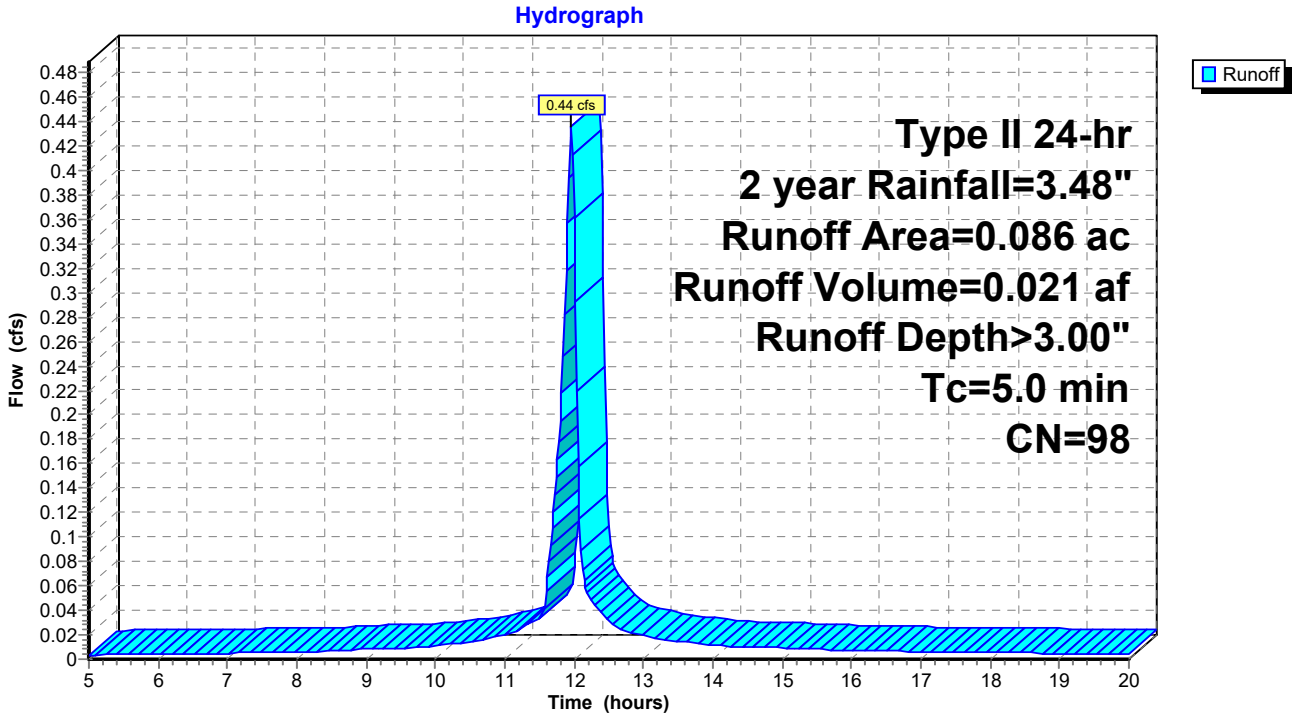

Hydrograph for Subcatchment 13S: Developed

Time (hours)	Precip. (inches)	Excess (inches)	Runoff (cfs)
5.00	0.22	0.08	0.00
5.20	0.23	0.09	0.00
5.40	0.24	0.10	0.00
5.60	0.25	0.11	0.00
5.80	0.27	0.12	0.00
6.00	0.28	0.13	0.00
6.20	0.29	0.14	0.00
6.40	0.30	0.15	0.00
6.60	0.32	0.16	0.00
6.80	0.33	0.17	0.00
7.00	0.34	0.18	0.01
7.20	0.36	0.19	0.01
7.40	0.37	0.21	0.01
7.60	0.39	0.22	0.01
7.80	0.40	0.23	0.01
8.00	0.42	0.24	0.01
8.20	0.43	0.26	0.01
8.40	0.45	0.27	0.01
8.60	0.47	0.29	0.01
8.80	0.49	0.31	0.01
9.00	0.51	0.33	0.01
9.20	0.53	0.35	0.01
9.40	0.56	0.37	0.01
9.60	0.58	0.39	0.01
9.80	0.60	0.41	0.01
10.00	0.63	0.44	0.01
10.20	0.66	0.47	0.01
10.40	0.69	0.50	0.01
10.60	0.73	0.53	0.02
10.80	0.77	0.57	0.02
11.00	0.82	0.62	0.02
11.20	0.87	0.67	0.02
11.40	0.94	0.74	0.03
11.60	1.07	0.86	0.06
11.80	1.50	1.28	**0.20**
12.00	2.31	2.08	**0.36**
12.20	2.43	2.20	0.05
12.40	2.52	2.29	0.04
12.60	2.59	2.36	0.03
12.80	2.64	2.41	0.02
13.00	2.69	2.46	0.02
13.20	2.73	2.50	0.02
13.40	2.76	2.53	0.02
13.60	2.80	2.57	0.01
13.80	2.83	2.60	0.01
14.00	2.85	2.62	0.01
14.20	2.88	2.65	0.01
14.40	2.90	2.67	0.01
14.60	2.93	2.70	0.01
14.80	2.95	2.72	0.01
15.00	2.97	2.74	0.01
15.20	2.99	2.76	0.01
15.40	3.01	2.78	0.01
15.60	3.03	2.80	0.01
15.80	3.05	2.81	0.01
16.00	3.06	2.83	0.01
16.20	3.08	2.85	0.01
16.40	3.09	2.86	0.01
16.60	3.11	2.88	0.01
16.80	3.12	2.89	0.01
17.00	3.14	2.91	0.01
17.20	3.15	2.92	0.01
17.40	3.17	2.93	0.01
17.60	3.18	2.95	0.01
17.80	3.19	2.96	0.01
18.00	3.21	2.97	0.01
18.20	3.22	2.98	0.01
18.40	3.23	3.00	0.01
18.60	3.24	3.01	0.01
18.80	3.25	3.02	0.00
19.00	3.26	3.03	0.00
19.20	3.27	3.04	0.00
19.40	3.28	3.05	0.00
19.60	3.29	3.06	0.00
19.80	3.30	3.07	0.00
20.00	**3.31**	**3.08**	0.00

Summary for Subcatchment 16S: Developed

Runoff = 5.30 cfs @ 11.96 hrs, Volume= 0.239 af, Depth> 2.45"

Runoff by SCS TR-20 method, UH=SCS, Weighted-CN, Time Span= 5.00-20.00 hrs, dt= 0.02 hrs
Type II 24-hr 2 year Rainfall=3.48"

Area (ac)	CN	Description
0.770	98	Paved parking, HSG D
0.398	80	>75% Grass cover, Good, HSG D
1.168	92	Weighted Average
0.398		34.08% Pervious Area
0.770		65.92% Impervious Area

Tc (min)	Length (feet)	Slope (ft/ft)	Velocity (ft/sec)	Capacity (cfs)	Description
5.0					**Direct Entry, Minimum**

Subcatchment 16S: Developed

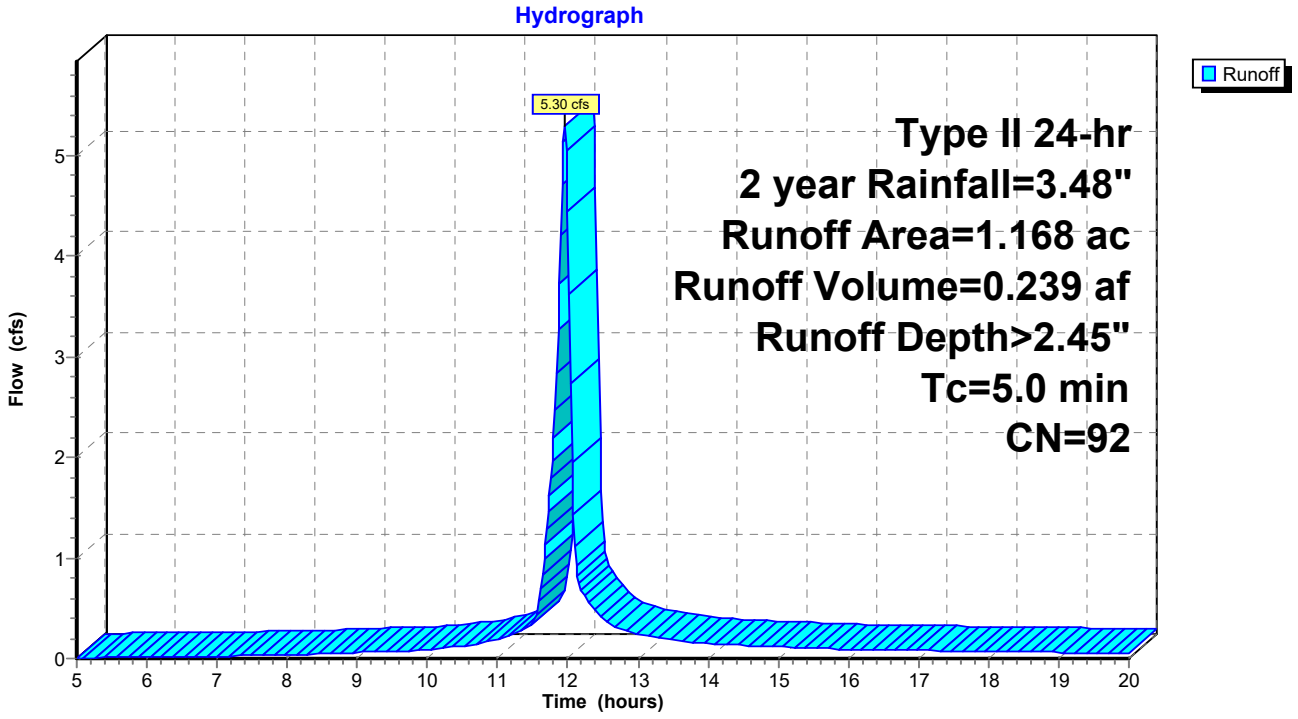

Hydrograph for Subcatchment 16S: Developed

Time (hours)	Precip. (inches)	Excess (inches)	Runoff (cfs)
5.00	0.22	0.00	0.01
5.20	0.23	0.00	0.01
5.40	0.24	0.00	0.01
5.60	0.25	0.01	0.01
5.80	0.27	0.01	0.01
6.00	0.28	0.01	0.01
6.20	0.29	0.01	0.02
6.40	0.30	0.02	0.02
6.60	0.32	0.02	0.02
6.80	0.33	0.02	0.02
7.00	0.34	0.03	0.02
7.20	0.36	0.03	0.03
7.40	0.37	0.04	0.03
7.60	0.39	0.04	0.03
7.80	0.40	0.05	0.03
8.00	0.42	0.05	0.03
8.20	0.43	0.06	0.04
8.40	0.45	0.07	0.04
8.60	0.47	0.08	0.05
8.80	0.49	0.08	0.05
9.00	0.51	0.09	0.06
9.20	0.53	0.11	0.06
9.40	0.56	0.12	0.07
9.60	0.58	0.13	0.07
9.80	0.60	0.14	0.08
10.00	0.63	0.16	0.09
10.20	0.66	0.17	0.10
10.40	0.69	0.19	0.12
10.60	0.73	0.22	0.13
10.80	0.77	0.24	0.16
11.00	0.82	0.27	0.19
11.20	0.87	0.31	0.23
11.40	0.94	0.36	0.30
11.60	1.07	0.45	0.58
11.80	1.50	0.80	**2.19**
12.00	2.31	1.52	**4.44**
12.20	2.43	1.63	0.67
12.40	2.52	1.71	0.48
12.60	2.59	1.77	0.33
12.80	2.64	1.82	0.29
13.00	2.69	1.87	0.25
13.20	2.73	1.90	0.22
13.40	2.76	1.94	0.20
13.60	2.80	1.97	0.18
13.80	2.83	2.00	0.16
14.00	2.85	2.02	0.15
14.20	2.88	2.05	0.14
14.40	2.90	2.07	0.13
14.60	2.93	2.09	0.13
14.80	2.95	2.11	0.12
15.00	2.97	2.13	0.12
15.20	2.99	2.15	0.11
15.40	3.01	2.17	0.11
15.60	3.03	2.19	0.10
15.80	3.05	2.20	0.10
16.00	3.06	2.22	0.09
16.20	3.08	2.24	0.09
16.40	3.09	2.25	0.09
16.60	3.11	2.26	0.08
16.80	3.12	2.28	0.08
17.00	3.14	2.29	0.08
17.20	3.15	2.31	0.08
17.40	3.17	2.32	0.08
17.60	3.18	2.33	0.07
17.80	3.19	2.34	0.07
18.00	3.21	2.36	0.07
18.20	3.22	2.37	0.07
18.40	3.23	2.38	0.07
18.60	3.24	2.39	0.07
18.80	3.25	2.40	0.06
19.00	3.26	2.41	0.06
19.20	3.27	2.42	0.06
19.40	3.28	2.43	0.06
19.60	3.29	2.44	0.06
19.80	3.30	2.45	0.05
20.00	**3.31**	**2.46**	0.05

Summary for Pond 14P: (new Pond)

Inflow Area = 1.168 ac, 65.92% Impervious, Inflow Depth > 2.45" for 2 year event
Inflow = 5.30 cfs @ 11.96 hrs, Volume= 0.239 af
Outflow = 4.35 cfs @ 12.00 hrs, Volume= 0.221 af, Atten= 18%, Lag= 2.7 min
Primary = 4.35 cfs @ 12.00 hrs, Volume= 0.221 af

Routing by Stor-Ind method, Time Span= 5.00-20.00 hrs, dt= 0.02 hrs
Peak Elev= 1,240.86' @ 12.00 hrs Surf.Area= 2,319 sf Storage= 1,840 cf

Plug-Flow detention time= 48.3 min calculated for 0.221 af (92% of inflow)
Center-of-Mass det. time= 21.1 min (777.2 - 756.0)

Volume	Invert	Avail.Storage	Storage Description
#1	1,239.69'	10,748 cf	**Custom Stage Data (Prismatic)** Listed below (Recalc)

Elevation (feet)	Surf.Area (sq-ft)	Inc.Store (cubic-feet)	Cum.Store (cubic-feet)
1,239.69	0	0	0
1,240.00	1,432	222	222
1,241.00	2,461	1,947	2,168
1,242.00	3,619	3,040	5,208
1,243.25	5,244	5,539	10,748

Device	Routing	Invert	Outlet Devices
#1	Primary	1,239.69'	**18.0" Round Culvert** L= 26.0' RCP, square edge headwall, Ke= 0.500 Inlet / Outlet Invert= 1,239.69' / 1,239.47' S= 0.0085 '/' Cc= 0.900 n= 0.013, Flow Area= 1.77 sf
#2	Device 1	1,239.69'	**15.5" Vert. Orifice/Grate** C= 0.600

Primary OutFlow Max=4.34 cfs @ 12.00 hrs HW=1,240.86' TW=1,240.34' (Fixed TW Elev= 1,240.34')
↑**1=Culvert** (Passes 4.34 cfs of 4.46 cfs potential flow)
↑**2=Orifice/Grate** (Orifice Controls 4.34 cfs @ 3.48 fps)

Pond 14P: (new Pond)

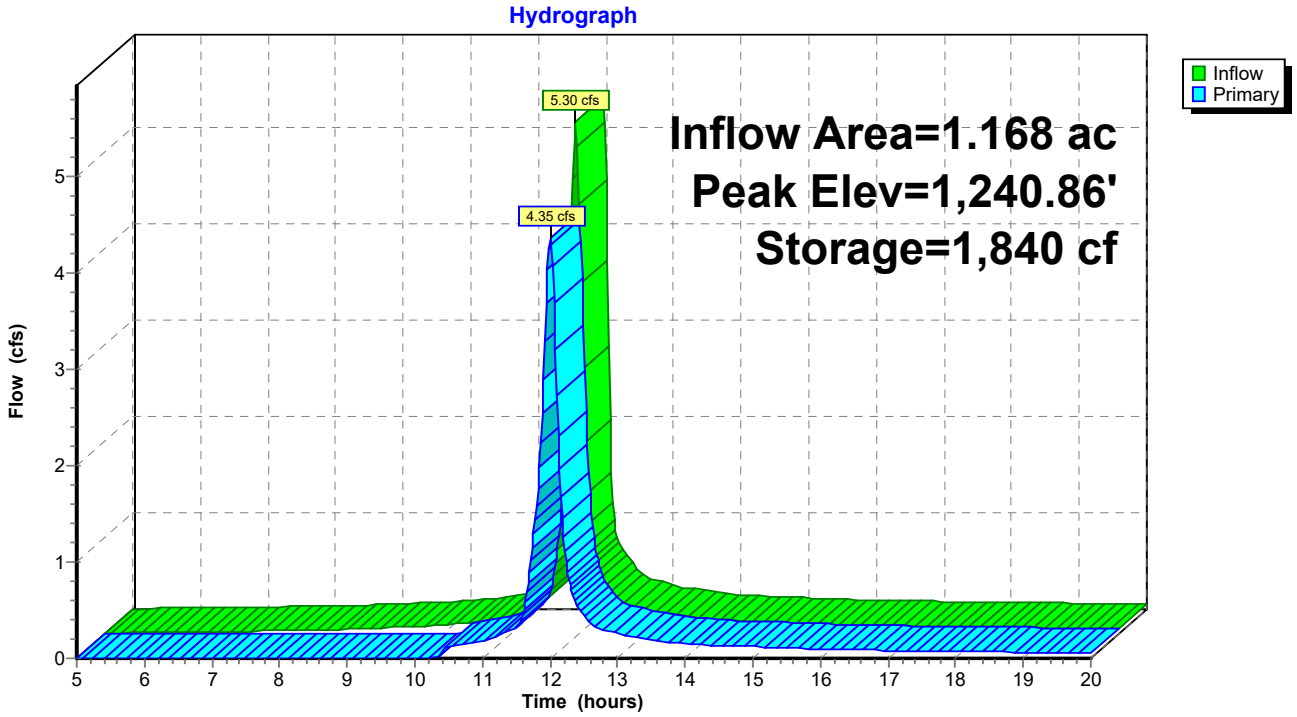

Pond 14P: (new Pond)

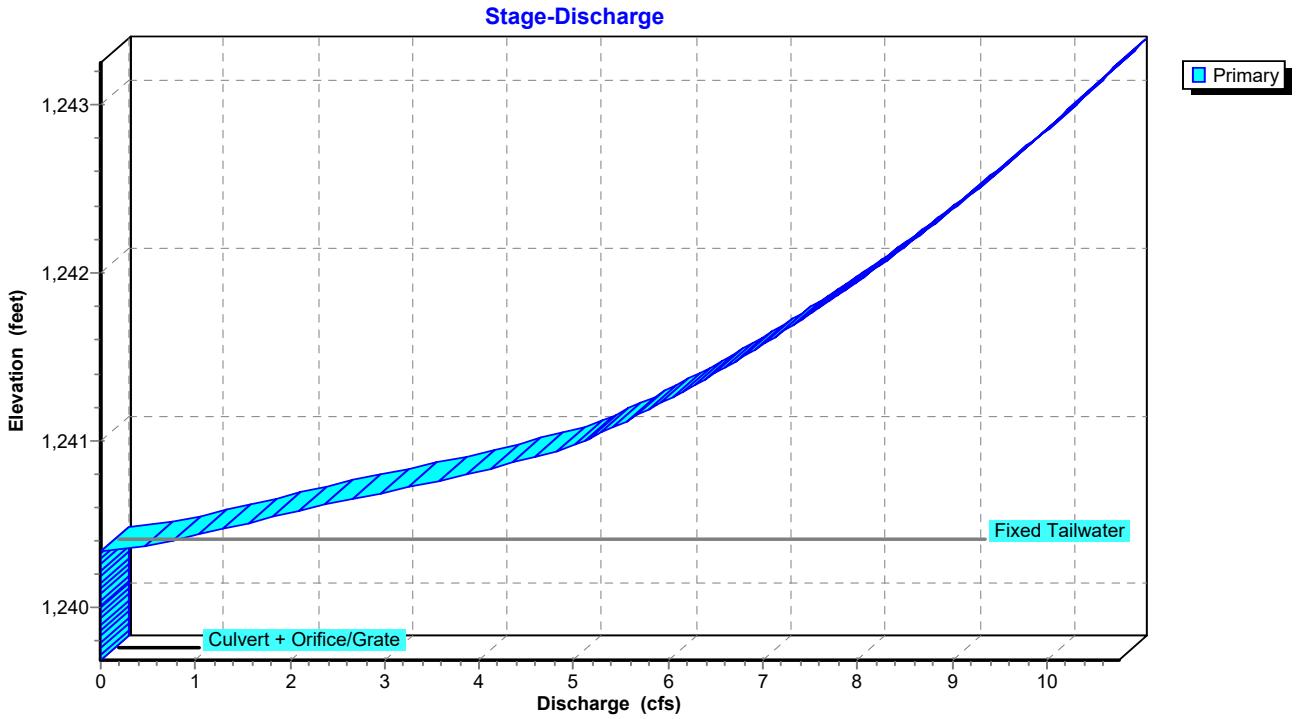

Pond 14P: (new Pond)

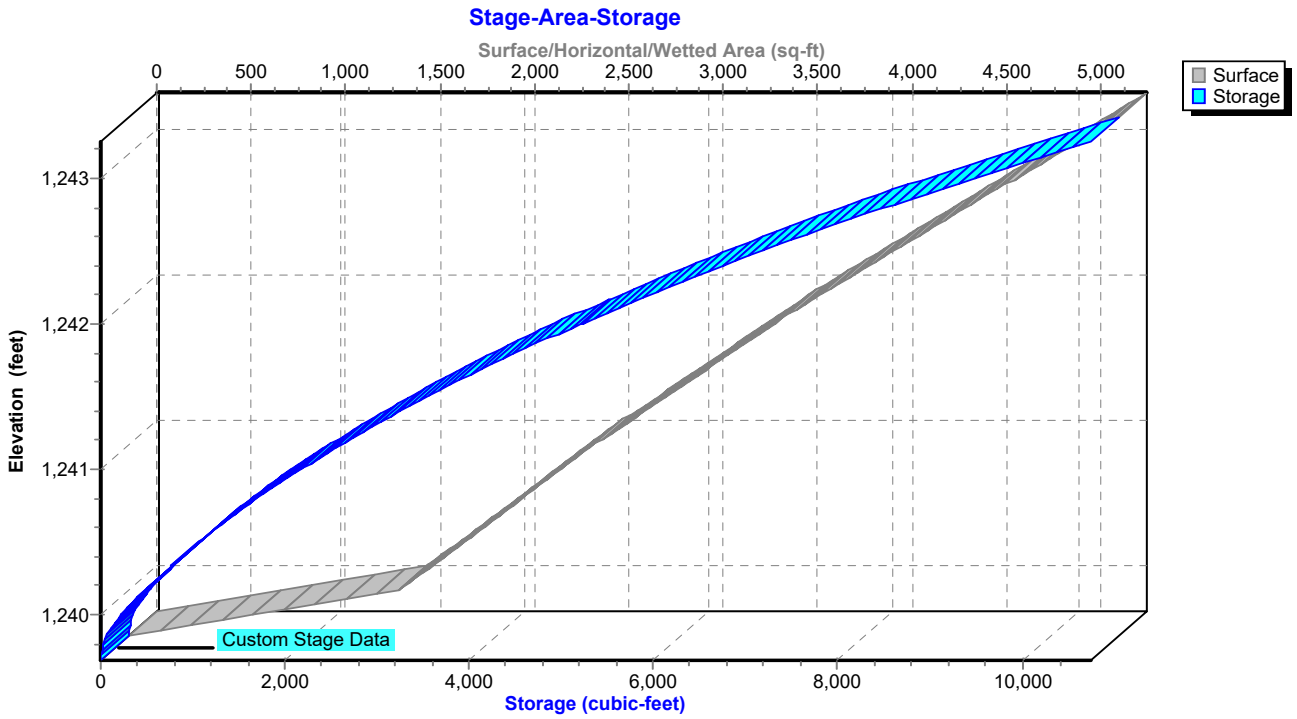

Hydrograph for Pond 14P: (new Pond)

Time (hours)	Inflow (cfs)	Storage (cubic-feet)	Elevation (feet)	Primary (cfs)
5.00	0.01	0	1,239.69	0.00
5.40	0.01	11	1,239.76	0.00
5.80	0.01	26	1,239.80	0.00
6.20	0.02	47	1,239.83	0.00
6.60	0.02	73	1,239.87	0.00
7.00	0.02	104	1,239.90	0.00
7.40	0.03	142	1,239.94	0.00
7.80	0.03	185	1,239.97	0.00
8.20	0.04	235	1,240.01	0.00
8.60	0.05	297	1,240.05	0.00
9.00	0.06	376	1,240.10	0.00
9.40	0.07	468	1,240.16	0.00
9.80	0.08	571	1,240.23	0.00
10.20	0.10	701	1,240.30	0.00
10.60	0.13	782	1,240.35	0.13
11.00	0.19	787	1,240.35	0.18
11.40	0.30	798	1,240.36	0.29
11.80	**2.19**	**1,091**	**1,240.51**	**1.59**
12.20	**0.67**	**1,005**	**1,240.47**	**1.26**
12.60	0.33	804	1,240.36	0.35
13.00	0.25	794	1,240.35	0.25
13.40	0.20	789	1,240.35	0.20
13.80	0.16	785	1,240.35	0.17
14.20	0.14	783	1,240.35	0.14
14.60	0.13	782	1,240.35	0.13
15.00	0.12	780	1,240.35	0.12
15.40	0.11	779	1,240.35	0.11
15.80	0.10	778	1,240.35	0.10
16.20	0.09	777	1,240.35	0.09
16.60	0.08	777	1,240.34	0.08
17.00	0.08	777	1,240.34	0.08
17.40	0.08	776	1,240.34	0.08
17.80	0.07	776	1,240.34	0.07
18.20	0.07	775	1,240.34	0.07
18.60	0.07	775	1,240.34	0.07
19.00	0.06	775	1,240.34	0.06
19.40	0.06	774	1,240.34	0.06
19.80	0.05	774	1,240.34	0.05

Stage-Discharge for Pond 14P: (new Pond)

Elevation (feet)	Primary (cfs)	Elevation (feet)	Primary (cfs)	Elevation (feet)	Primary (cfs)	Elevation (feet)	Primary (cfs)
1,239.69	0.00	1,240.73	3.32	1,241.77	7.54	1,242.81	9.92
1,239.71	0.00	1,240.75	3.50	1,241.79	7.60	1,242.83	9.96
1,239.73	0.00	1,240.77	3.67	1,241.81	7.65	1,242.85	10.00
1,239.75	0.00	1,240.79	3.84	1,241.83	7.70	1,242.87	10.04
1,239.77	0.00	1,240.81	3.98	1,241.85	7.75	1,242.89	10.08
1,239.79	0.00	1,240.83	4.13	1,241.87	7.80	1,242.91	10.11
1,239.81	0.00	1,240.85	4.26	1,241.89	7.86	1,242.93	10.15
1,239.83	0.00	1,240.87	4.40	1,241.91	7.91	1,242.95	10.19
1,239.85	0.00	1,240.89	4.53	1,241.93	7.96	1,242.97	10.23
1,239.87	0.00	1,240.91	4.66	1,241.95	8.01	1,242.99	10.27
1,239.89	0.00	1,240.93	4.78	1,241.97	8.06	1,243.01	10.31
1,239.91	0.00	1,240.95	4.90	1,241.99	8.10	1,243.03	10.35
1,239.93	0.00	1,240.97	5.00	1,242.01	8.15	1,243.05	10.39
1,239.95	0.00	1,240.99	5.09	1,242.03	8.20	1,243.07	10.42
1,239.97	0.00	1,241.01	5.16	1,242.05	8.25	1,243.09	10.46
1,239.99	0.00	1,241.03	5.24	1,242.07	8.30	1,243.11	10.50
1,240.01	0.00	1,241.05	5.32	1,242.09	8.35	1,243.13	10.54
1,240.03	0.00	1,241.07	5.39	1,242.11	8.39	1,243.15	10.58
1,240.05	0.00	1,241.09	5.46	1,242.13	8.44	1,243.17	10.61
1,240.07	0.00	1,241.11	5.54	1,242.15	8.49	1,243.19	10.65
1,240.09	0.00	1,241.13	5.61	1,242.17	8.54	1,243.21	10.69
1,240.11	0.00	1,241.15	5.68	1,242.19	8.58	1,243.23	10.73
1,240.13	0.00	1,241.17	5.75	1,242.21	8.63	1,243.25	**10.76**
1,240.15	0.00	1,241.19	5.82	1,242.23	8.67		
1,240.17	0.00	1,241.21	5.88	1,242.25	8.72		
1,240.19	0.00	1,241.23	5.95	1,242.27	8.77		
1,240.21	0.00	1,241.25	6.02	1,242.29	8.81		
1,240.23	0.00	1,241.27	6.08	1,242.31	8.86		
1,240.25	0.00	1,241.29	6.15	1,242.33	8.90		
1,240.27	0.00	1,241.31	6.21	1,242.35	8.95		
1,240.29	0.00	1,241.33	6.28	1,242.37	8.99		
1,240.31	0.00	1,241.35	6.34	1,242.39	9.03		
1,240.33	0.00	1,241.37	6.40	1,242.41	9.08		
1,240.35	0.27	1,241.39	6.47	1,242.43	9.12		
1,240.37	0.50	1,241.41	6.53	1,242.45	9.16		
1,240.39	0.67	1,241.43	6.59	1,242.47	9.21		
1,240.41	0.83	1,241.45	6.65	1,242.49	9.25		
1,240.43	0.98	1,241.47	6.71	1,242.51	9.29		
1,240.45	1.13	1,241.49	6.77	1,242.53	9.34		
1,240.47	1.27	1,241.51	6.82	1,242.55	9.38		
1,240.49	1.42	1,241.53	6.88	1,242.57	9.42		
1,240.51	1.57	1,241.55	6.94	1,242.59	9.46		
1,240.53	1.72	1,241.57	7.00	1,242.61	9.51		
1,240.55	1.87	1,241.59	7.05	1,242.63	9.55		
1,240.57	2.02	1,241.61	7.11	1,242.65	9.59		
1,240.59	2.18	1,241.63	7.17	1,242.67	9.63		
1,240.61	2.33	1,241.65	7.22	1,242.69	9.67		
1,240.63	2.49	1,241.67	7.28	1,242.71	9.71		
1,240.65	2.65	1,241.69	7.33	1,242.73	9.75		
1,240.67	2.82	1,241.71	7.38	1,242.75	9.79		
1,240.69	2.98	1,241.73	7.44	1,242.77	9.84		
1,240.71	3.15	1,241.75	7.49	1,242.79	9.88		

Stage-Area-Storage for Pond 14P: (new Pond)

Elevation (feet)	Surface (sq-ft)	Storage (cubic-feet)
1,239.69	0	0
1,239.74	231	6
1,239.79	462	23
1,239.84	693	52
1,239.89	924	92
1,239.94	1,155	144
1,239.99	1,386	208
1,240.04	1,473	280
1,240.09	1,525	355
1,240.14	1,576	433
1,240.19	1,628	513
1,240.24	1,679	595
1,240.29	1,730	681
1,240.34	1,782	768
1,240.39	1,833	859
1,240.44	1,885	952
1,240.49	1,936	1,047
1,240.54	1,988	1,145
1,240.59	2,039	1,246
1,240.64	2,091	1,349
1,240.69	2,142	1,455
1,240.74	2,193	1,563
1,240.79	2,245	1,674
1,240.84	2,296	1,788
1,240.89	2,348	1,904
1,240.94	2,399	2,023
1,240.99	2,451	2,144
1,241.04	2,507	2,268
1,241.09	2,565	2,395
1,241.14	2,623	2,524
1,241.19	2,681	2,657
1,241.24	2,739	2,792
1,241.29	2,797	2,931
1,241.34	2,855	3,072
1,241.39	2,913	3,216
1,241.44	2,971	3,363
1,241.49	3,028	3,513
1,241.54	3,086	3,666
1,241.59	3,144	3,822
1,241.64	3,202	3,981
1,241.69	3,260	4,142
1,241.74	3,318	4,307
1,241.79	3,376	4,474
1,241.84	3,434	4,644
1,241.89	3,492	4,817
1,241.94	3,550	4,993
1,241.99	3,607	5,172
1,242.04	3,671	5,354
1,242.09	3,736	5,539
1,242.14	3,801	5,728
1,242.19	3,866	5,920
1,242.24	3,931	6,114
1,242.29	3,996	6,313
1,242.34	4,061	6,514
1,242.39	4,126	6,719
1,242.44	4,191	6,927
1,242.49	4,256	7,138
1,242.54	4,321	7,352
1,242.59	4,386	7,570
1,242.64	4,451	7,791
1,242.69	4,516	8,015
1,242.74	4,581	8,242
1,242.79	4,646	8,473
1,242.84	4,711	8,707
1,242.89	4,776	8,944
1,242.94	4,841	9,185
1,242.99	4,906	9,428
1,243.04	4,971	9,675
1,243.09	5,036	9,925
1,243.14	5,101	10,179
1,243.19	5,166	10,436
1,243.24	**5,231**	**10,695**

Summary for Link 15L: (new Link)

Inflow Area = 1.254 ac, 68.26% Impervious, Inflow Depth > 2.32" for 2 year event
Inflow = 4.71 cfs @ 12.00 hrs, Volume= 0.243 af
Primary = 4.71 cfs @ 12.00 hrs, Volume= 0.243 af, Atten= 0%, Lag= 0.0 min

Primary outflow = Inflow, Time Span= 5.00-20.00 hrs, dt= 0.02 hrs

Link 15L: (new Link)

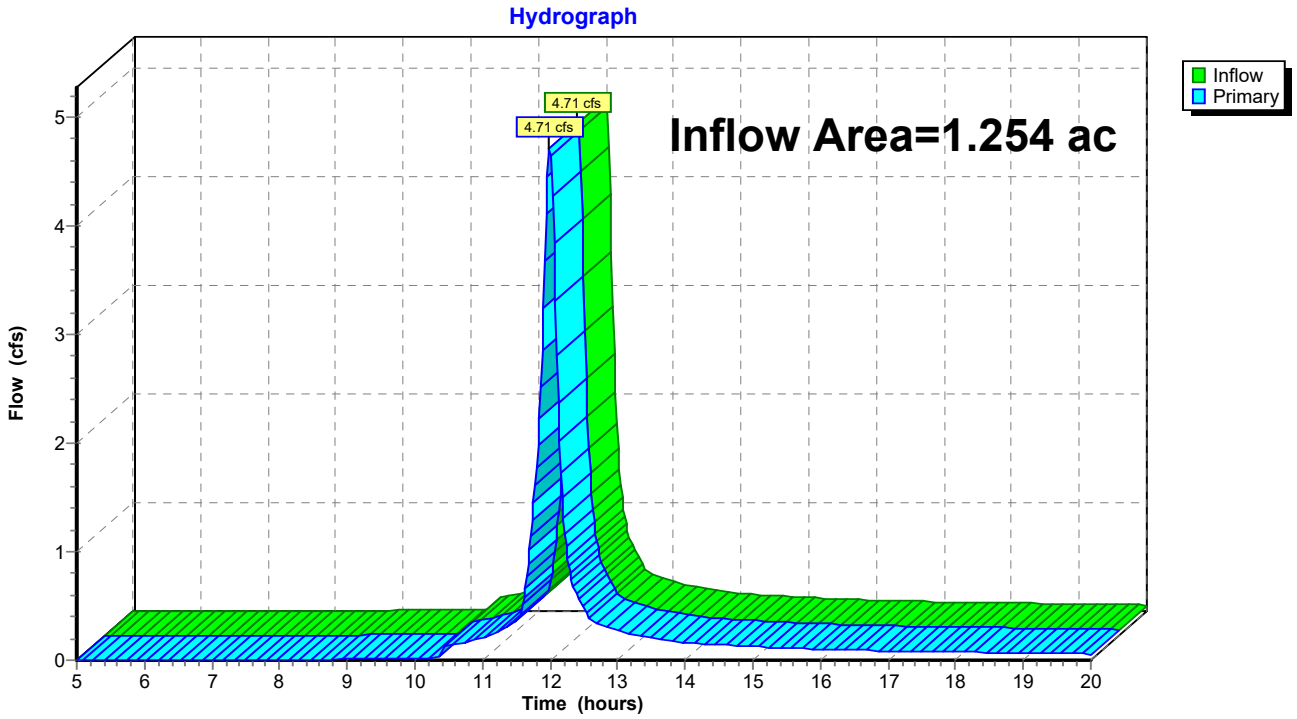

Hydrograph for Link 15L: (new Link)

Time (hours)	Inflow (cfs)	Elevation (feet)	Primary (cfs)
5.00	0.00	**0.00**	0.00
5.20	0.00	0.00	0.00
5.40	0.00	0.00	0.00
5.60	0.00	0.00	0.00
5.80	0.00	0.00	0.00
6.00	0.00	0.00	0.00
6.20	0.00	0.00	0.00
6.40	0.00	0.00	0.00
6.60	0.00	0.00	0.00
6.80	0.00	0.00	0.00
7.00	0.01	0.00	0.01
7.20	0.01	0.00	0.01
7.40	0.01	0.00	0.01
7.60	0.01	0.00	0.01
7.80	0.01	0.00	0.01
8.00	0.01	0.00	0.01
8.20	0.01	0.00	0.01
8.40	0.01	0.00	0.01
8.60	0.01	0.00	0.01
8.80	0.01	0.00	0.01
9.00	0.01	0.00	0.01
9.20	0.01	0.00	0.01
9.40	0.01	0.00	0.01
9.60	0.01	0.00	0.01
9.80	0.01	0.00	0.01
10.00	0.01	0.00	0.01
10.20	0.01	0.00	0.01
10.40	0.08	0.00	0.08
10.60	0.15	0.00	0.15
10.80	0.17	0.00	0.17
11.00	0.20	0.00	0.20
11.20	0.25	0.00	0.25
11.40	0.32	0.00	0.32
11.60	0.52	0.00	0.52
11.80	1.78	0.00	1.78
12.00	**4.71**	0.00	**4.71**
12.20	1.31	0.00	1.31
12.40	0.60	0.00	0.60
12.60	0.37	0.00	0.37
12.80	0.32	0.00	0.32
13.00	0.27	0.00	0.27
13.20	0.24	0.00	0.24
13.40	0.22	0.00	0.22
13.60	0.20	0.00	0.20
13.80	0.18	0.00	0.18
14.00	0.16	0.00	0.16
14.20	0.15	0.00	0.15
14.40	0.15	0.00	0.15
14.60	0.14	0.00	0.14
14.80	0.13	0.00	0.13
15.00	0.13	0.00	0.13
15.20	0.12	0.00	0.12
15.40	0.12	0.00	0.12
15.60	0.11	0.00	0.11
15.80	0.10	0.00	0.10
16.00	0.10	0.00	0.10
16.20	0.10	0.00	0.10
16.40	0.09	0.00	0.09
16.60	0.09	0.00	0.09
16.80	0.09	0.00	0.09
17.00	0.09	0.00	0.09
17.20	0.08	0.00	0.08
17.40	0.08	0.00	0.08
17.60	0.08	0.00	0.08
17.80	0.08	0.00	0.08
18.00	0.08	0.00	0.08
18.20	0.07	0.00	0.07
18.40	0.07	0.00	0.07
18.60	0.07	0.00	0.07
18.80	0.07	0.00	0.07
19.00	0.07	0.00	0.07
19.20	0.06	0.00	0.06
19.40	0.06	0.00	0.06
19.60	0.06	0.00	0.06
19.80	0.06	0.00	0.06
20.00	0.06	0.00	0.06

Summary for Subcatchment 12S: Historic

Runoff = 6.67 cfs @ 11.96 hrs, Volume= 0.290 af, Depth> 2.78"

Runoff by SCS TR-20 method, UH=SCS, Weighted-CN, Time Span= 5.00-20.00 hrs, dt= 0.02 hrs
Type II 24-hr 5 year Rainfall=4.47"

Area (ac)	CN	Description
0.384	98	Paved parking, HSG D
0.870	80	>75% Grass cover, Good, HSG D
1.254	86	Weighted Average
0.870		69.38% Pervious Area
0.384		30.62% Impervious Area

Tc (min)	Length (feet)	Slope (ft/ft)	Velocity (ft/sec)	Capacity (cfs)	Description
5.0					**Direct Entry, Minimum**

Subcatchment 12S: Historic

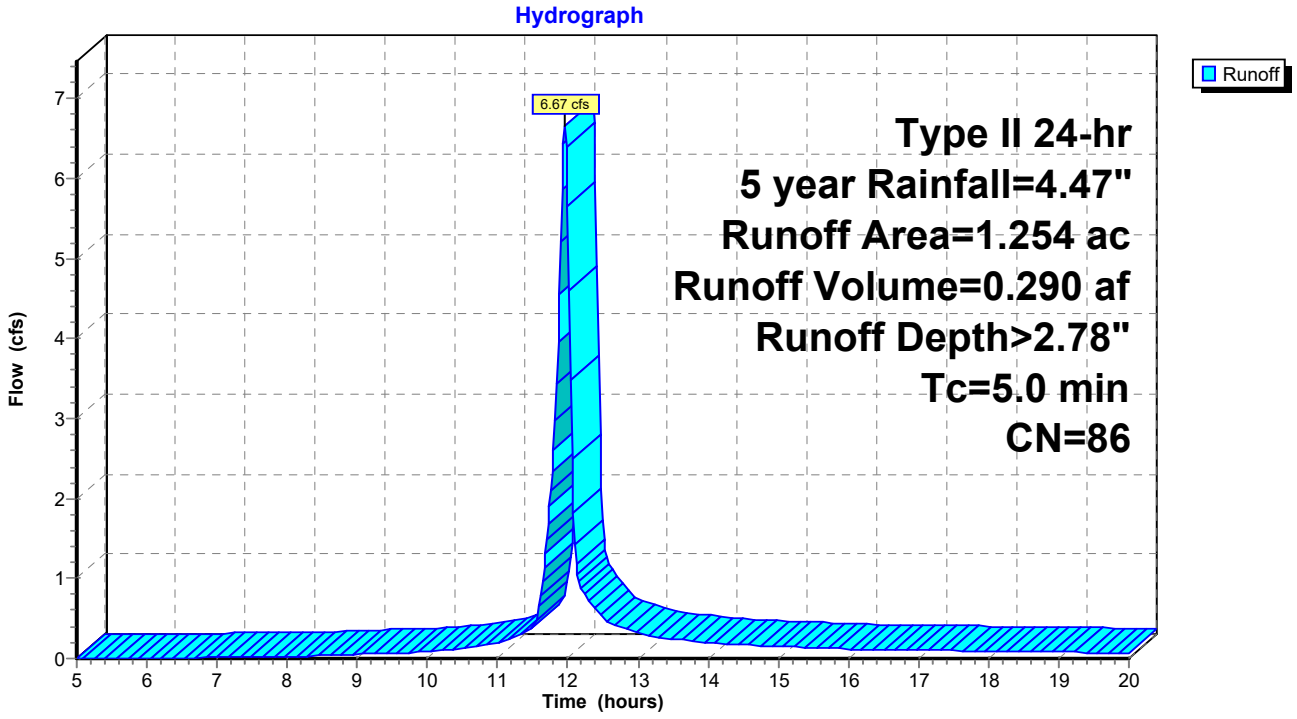

Hydrograph for Subcatchment 12S: Historic

Time (hours)	Precip. (inches)	Excess (inches)	Runoff (cfs)
5.00	0.28	0.00	0.00
5.20	0.30	0.00	0.00
5.40	0.31	0.00	0.00
5.60	0.33	0.00	0.00
5.80	0.34	0.00	0.00
6.00	0.36	0.00	0.00
6.20	0.37	0.00	0.01
6.40	0.39	0.00	0.01
6.60	0.41	0.00	0.01
6.80	0.42	0.01	0.01
7.00	0.44	0.01	0.01
7.20	0.46	0.01	0.02
7.40	0.48	0.01	0.02
7.60	0.50	0.02	0.02
7.80	0.52	0.02	0.02
8.00	0.54	0.02	0.03
8.20	0.56	0.03	0.03
8.40	0.58	0.03	0.03
8.60	0.60	0.04	0.04
8.80	0.63	0.05	0.05
9.00	0.66	0.06	0.05
9.20	0.69	0.07	0.06
9.40	0.71	0.07	0.06
9.60	0.74	0.09	0.07
9.80	0.77	0.10	0.08
10.00	0.81	0.11	0.09
10.20	0.85	0.13	0.10
10.40	0.89	0.14	0.12
10.60	0.94	0.17	0.14
10.80	0.99	0.19	0.17
11.00	1.05	0.22	0.20
11.20	1.12	0.26	0.26
11.40	1.21	0.31	0.33
11.60	1.37	0.41	0.65
11.80	1.93	0.79	**2.61**
12.00	2.96	1.63	**5.64**
12.20	3.12	1.77	0.86
12.40	3.24	1.87	0.63
12.60	3.32	1.94	0.43
12.80	3.39	2.00	0.37
13.00	3.45	2.05	0.32
13.20	3.50	2.10	0.29
13.40	3.55	2.14	0.26
13.60	3.59	2.18	0.23
13.80	3.63	2.21	0.21
14.00	3.67	2.25	0.19
14.20	3.70	2.27	0.18
14.40	3.73	2.30	0.18
14.60	3.76	2.33	0.17
14.80	3.79	2.35	0.16
15.00	3.82	2.38	0.16
15.20	3.84	2.40	0.15
15.40	3.87	2.43	0.14
15.60	3.89	2.45	0.13
15.80	3.91	2.47	0.13
16.00	3.93	2.49	0.12
16.20	3.95	2.50	0.12
16.40	3.97	2.52	0.11
16.60	3.99	2.54	0.11
16.80	4.01	2.56	0.11
17.00	4.03	2.57	0.11
17.20	4.05	2.59	0.10
17.40	4.07	2.61	0.10
17.60	4.08	2.62	0.10
17.80	4.10	2.64	0.10
18.00	4.12	2.65	0.09
18.20	4.13	2.67	0.09
18.40	4.15	2.68	0.09
18.60	4.16	2.69	0.09
18.80	4.18	2.71	0.08
19.00	4.19	2.72	0.08
19.20	4.21	2.73	0.08
19.40	4.22	2.75	0.08
19.60	4.23	2.76	0.07
19.80	4.24	2.77	0.07
20.00	**4.26**	**2.78**	0.07

Summary for Subcatchment 13S: Developed

Runoff = 0.56 cfs @ 11.96 hrs, Volume= 0.028 af, Depth> 3.89"

Runoff by SCS TR-20 method, UH=SCS, Weighted-CN, Time Span= 5.00-20.00 hrs, dt= 0.02 hrs
Type II 24-hr 5 year Rainfall=4.47"

Area (ac)	CN	Description
0.086	98	Paved parking, HSG D
0.086		100.00% Impervious Area

Tc (min)	Length (feet)	Slope (ft/ft)	Velocity (ft/sec)	Capacity (cfs)	Description
5.0					**Direct Entry, Minimum**

Subcatchment 13S: Developed

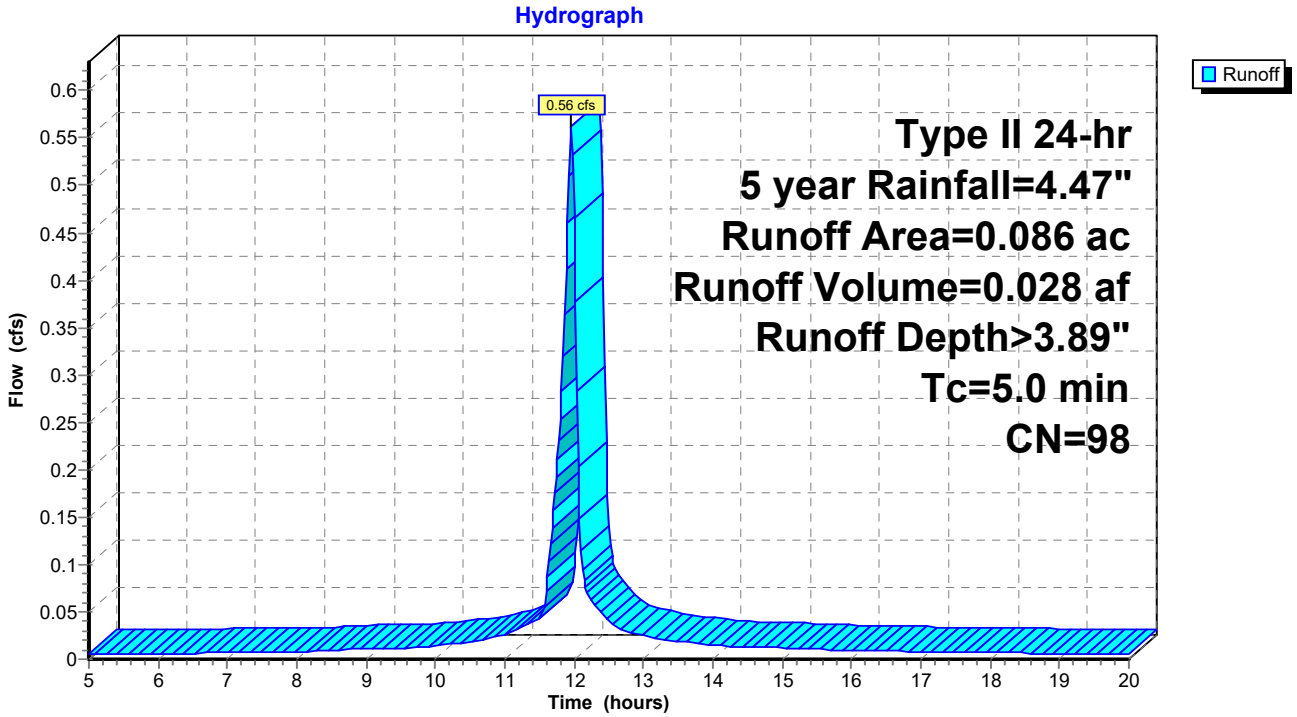

Hydrograph for Subcatchment 13S: Developed

Time (hours)	Precip. (inches)	Excess (inches)	Runoff (cfs)
5.00	0.28	0.13	0.00
5.20	0.30	0.14	0.01
5.40	0.31	0.15	0.01
5.60	0.33	0.17	0.01
5.80	0.34	0.18	0.01
6.00	0.36	0.19	0.01
6.20	0.37	0.21	0.01
6.40	0.39	0.22	0.01
6.60	0.41	0.24	0.01
6.80	0.42	0.25	0.01
7.00	0.44	0.27	0.01
7.20	0.46	0.28	0.01
7.40	0.48	0.30	0.01
7.60	0.50	0.32	0.01
7.80	0.52	0.33	0.01
8.00	0.54	0.35	0.01
8.20	0.56	0.37	0.01
8.40	0.58	0.39	0.01
8.60	0.60	0.41	0.01
8.80	0.63	0.44	0.01
9.00	0.66	0.46	0.01
9.20	0.69	0.49	0.01
9.40	0.71	0.52	0.01
9.60	0.74	0.54	0.01
9.80	0.77	0.57	0.01
10.00	0.81	0.61	0.01
10.20	0.85	0.64	0.02
10.40	0.89	0.68	0.02
10.60	0.94	0.73	0.02
10.80	0.99	0.78	0.02
11.00	1.05	0.84	0.03
11.20	1.12	0.91	0.03
11.40	1.21	1.00	0.04
11.60	1.37	1.15	0.07
11.80	1.93	1.70	**0.25**
12.00	2.96	2.73	**0.46**
12.20	3.12	2.89	0.07
12.40	3.24	3.01	0.05
12.60	3.32	3.09	0.03
12.80	3.39	3.16	0.03
13.00	3.45	3.22	0.03
13.20	3.50	3.27	0.02
13.40	3.55	3.32	0.02
13.60	3.59	3.36	0.02
13.80	3.63	3.40	0.02
14.00	3.67	3.43	0.01
14.20	3.70	3.46	0.01
14.40	3.73	3.49	0.01
14.60	3.76	3.52	0.01
14.80	3.79	3.55	0.01
15.00	3.82	3.58	0.01
15.20	3.84	3.61	0.01
15.40	3.87	3.63	0.01
15.60	3.89	3.66	0.01
15.80	3.91	3.68	0.01
16.00	3.93	3.70	0.01
16.20	3.95	3.72	0.01
16.40	3.97	3.74	0.01
16.60	3.99	3.76	0.01
16.80	4.01	3.78	0.01
17.00	4.03	3.80	0.01
17.20	4.05	3.81	0.01
17.40	4.07	3.83	0.01
17.60	4.08	3.85	0.01
17.80	4.10	3.87	0.01
18.00	4.12	3.88	0.01
18.20	4.13	3.90	0.01
18.40	4.15	3.91	0.01
18.60	4.16	3.93	0.01
18.80	4.18	3.94	0.01
19.00	4.19	3.96	0.01
19.20	4.21	3.97	0.01
19.40	4.22	3.98	0.01
19.60	4.23	4.00	0.01
19.80	4.24	4.01	0.01
20.00	**4.26**	**4.02**	0.01

Summary for Subcatchment 16S: Developed

Runoff = 7.08 cfs @ 11.96 hrs, Volume= 0.326 af, Depth> 3.35"

Runoff by SCS TR-20 method, UH=SCS, Weighted-CN, Time Span= 5.00-20.00 hrs, dt= 0.02 hrs
Type II 24-hr 5 year Rainfall=4.47"

Area (ac)	CN	Description
0.770	98	Paved parking, HSG D
0.398	80	>75% Grass cover, Good, HSG D
1.168	92	Weighted Average
0.398		34.08% Pervious Area
0.770		65.92% Impervious Area

Tc (min)	Length (feet)	Slope (ft/ft)	Velocity (ft/sec)	Capacity (cfs)	Description
5.0					**Direct Entry, Minimum**

Subcatchment 16S: Developed

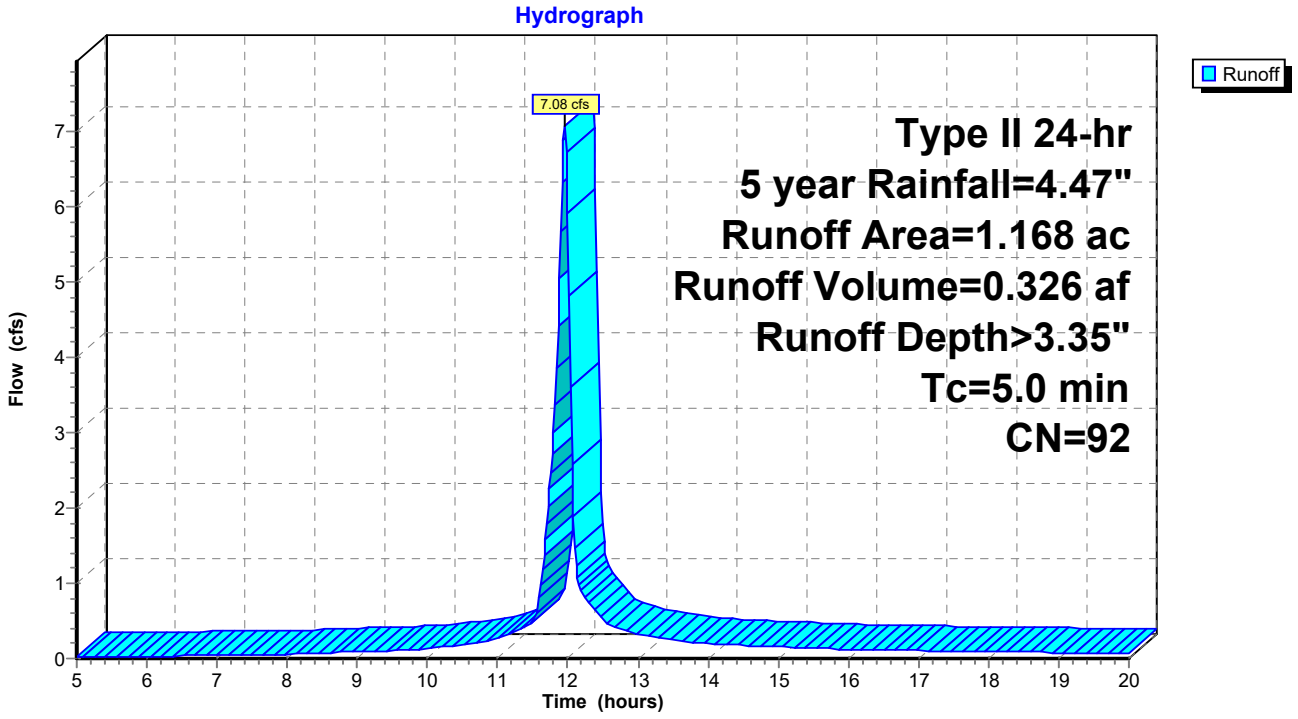

Hydrograph for Subcatchment 16S: Developed

Time (hours)	Precip. (inches)	Excess (inches)	Runoff (cfs)
5.00	0.28	0.01	0.02
5.20	0.30	0.02	0.02
5.40	0.31	0.02	0.02
5.60	0.33	0.02	0.02
5.80	0.34	0.03	0.03
6.00	0.36	0.03	0.03
6.20	0.37	0.04	0.03
6.40	0.39	0.04	0.03
6.60	0.41	0.05	0.04
6.80	0.42	0.06	0.04
7.00	0.44	0.06	0.04
7.20	0.46	0.07	0.05
7.40	0.48	0.08	0.05
7.60	0.50	0.09	0.05
7.80	0.52	0.10	0.05
8.00	0.54	0.11	0.06
8.20	0.56	0.12	0.06
8.40	0.58	0.13	0.07
8.60	0.60	0.14	0.08
8.80	0.63	0.16	0.09
9.00	0.66	0.17	0.10
9.20	0.69	0.19	0.10
9.40	0.71	0.21	0.10
9.60	0.74	0.23	0.11
9.80	0.77	0.25	0.12
10.00	0.81	0.27	0.13
10.20	0.85	0.29	0.15
10.40	0.89	0.32	0.17
10.60	0.94	0.36	0.20
10.80	0.99	0.39	0.23
11.00	1.05	0.44	0.27
11.20	1.12	0.50	0.34
11.40	1.21	0.57	0.43
11.60	1.37	0.69	0.81
11.80	1.93	1.17	**3.00**
12.00	2.96	2.13	**5.91**
12.20	3.12	2.28	0.88
12.40	3.24	2.39	0.64
12.60	3.32	2.47	0.44
12.80	3.39	2.53	0.38
13.00	3.45	2.59	0.33
13.20	3.50	2.64	0.29
13.40	3.55	2.68	0.26
13.60	3.59	2.72	0.24
13.80	3.63	2.76	0.21
14.00	3.67	2.80	0.19
14.20	3.70	2.83	0.18
14.40	3.73	2.86	0.18
14.60	3.76	2.89	0.17
14.80	3.79	2.91	0.16
15.00	3.82	2.94	0.15
15.20	3.84	2.96	0.15
15.40	3.87	2.99	0.14
15.60	3.89	3.01	0.13
15.80	3.91	3.03	0.13
16.00	3.93	3.05	0.12
16.20	3.95	3.07	0.12
16.40	3.97	3.09	0.11
16.60	3.99	3.11	0.11
16.80	4.01	3.13	0.11
17.00	4.03	3.15	0.11
17.20	4.05	3.16	0.10
17.40	4.07	3.18	0.10
17.60	4.08	3.20	0.10
17.80	4.10	3.21	0.10
18.00	4.12	3.23	0.09
18.20	4.13	3.25	0.09
18.40	4.15	3.26	0.09
18.60	4.16	3.28	0.09
18.80	4.18	3.29	0.08
19.00	4.19	3.30	0.08
19.20	4.21	3.32	0.08
19.40	4.22	3.33	0.07
19.60	4.23	3.34	0.07
19.80	4.24	3.35	0.07
20.00	**4.26**	**3.36**	0.07

Summary for Pond 14P: (new Pond)

Inflow Area = 1.168 ac, 65.92% Impervious, Inflow Depth > 3.35" for 5 year event
Inflow = 7.08 cfs @ 11.96 hrs, Volume= 0.326 af
Outflow = 5.39 cfs @ 12.01 hrs, Volume= 0.308 af, Atten= 24%, Lag= 3.2 min
Primary = 5.39 cfs @ 12.01 hrs, Volume= 0.308 af

Routing by Stor-Ind method, Time Span= 5.00-20.00 hrs, dt= 0.02 hrs
Peak Elev= 1,241.07' @ 12.01 hrs Surf.Area= 2,541 sf Storage= 2,340 cf

Plug-Flow detention time= 40.4 min calculated for 0.308 af (95% of inflow)
Center-of-Mass det. time= 19.1 min (768.8 - 749.7)

Volume	Invert	Avail.Storage	Storage Description
#1	1,239.69'	10,748 cf	**Custom Stage Data (Prismatic)** Listed below (Recalc)

Elevation (feet)	Surf.Area (sq-ft)	Inc.Store (cubic-feet)	Cum.Store (cubic-feet)
1,239.69	0	0	0
1,240.00	1,432	222	222
1,241.00	2,461	1,947	2,168
1,242.00	3,619	3,040	5,208
1,243.25	5,244	5,539	10,748

Device	Routing	Invert	Outlet Devices
#1	Primary	1,239.69'	**18.0" Round Culvert** L= 26.0' RCP, square edge headwall, Ke= 0.500 Inlet / Outlet Invert= 1,239.69' / 1,239.47' S= 0.0085 '/' Cc= 0.900 n= 0.013, Flow Area= 1.77 sf
#2	Device 1	1,239.69'	**15.5" Vert. Orifice/Grate** C= 0.600

Primary OutFlow Max=5.37 cfs @ 12.01 hrs HW=1,241.07' TW=1,240.34' (Fixed TW Elev= 1,240.34')
↑**1=Culvert** (Passes 5.37 cfs of 5.69 cfs potential flow)
↑**2=Orifice/Grate** (Orifice Controls 5.37 cfs @ 4.10 fps)

Pond 14P: (new Pond)

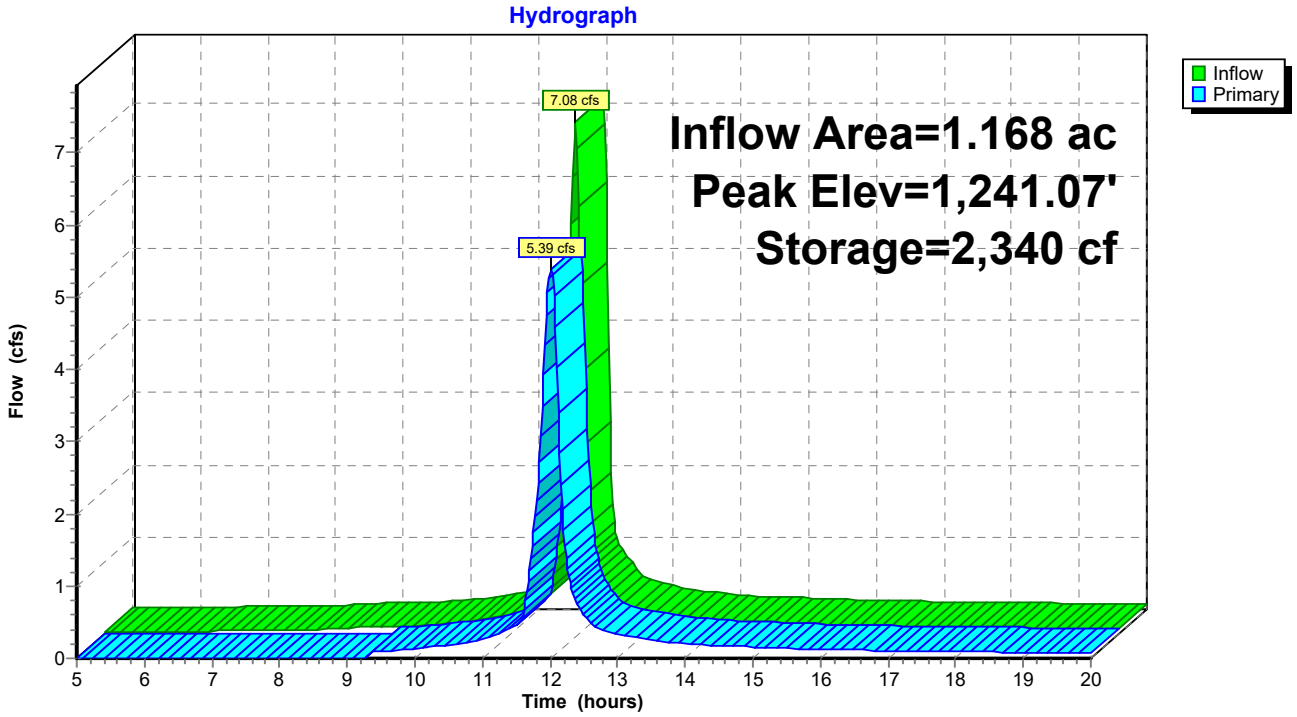

Pond 14P: (new Pond)

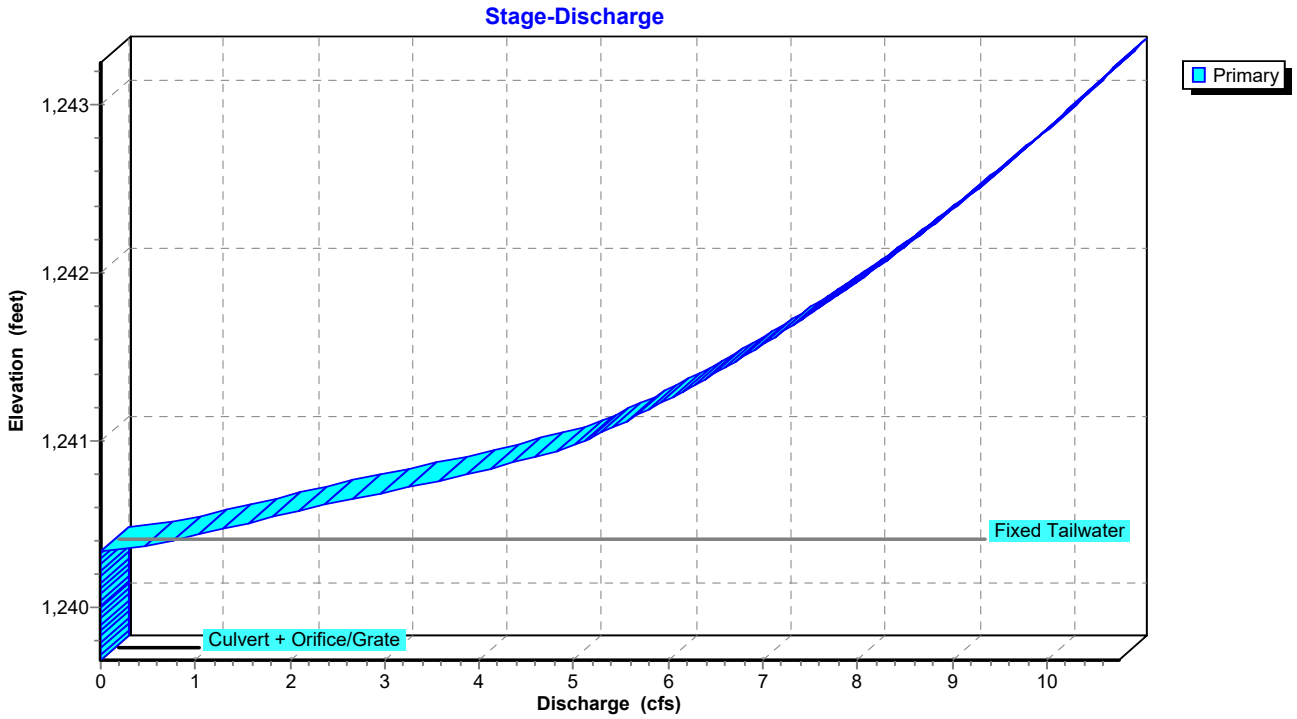

Pond 14P: (new Pond)

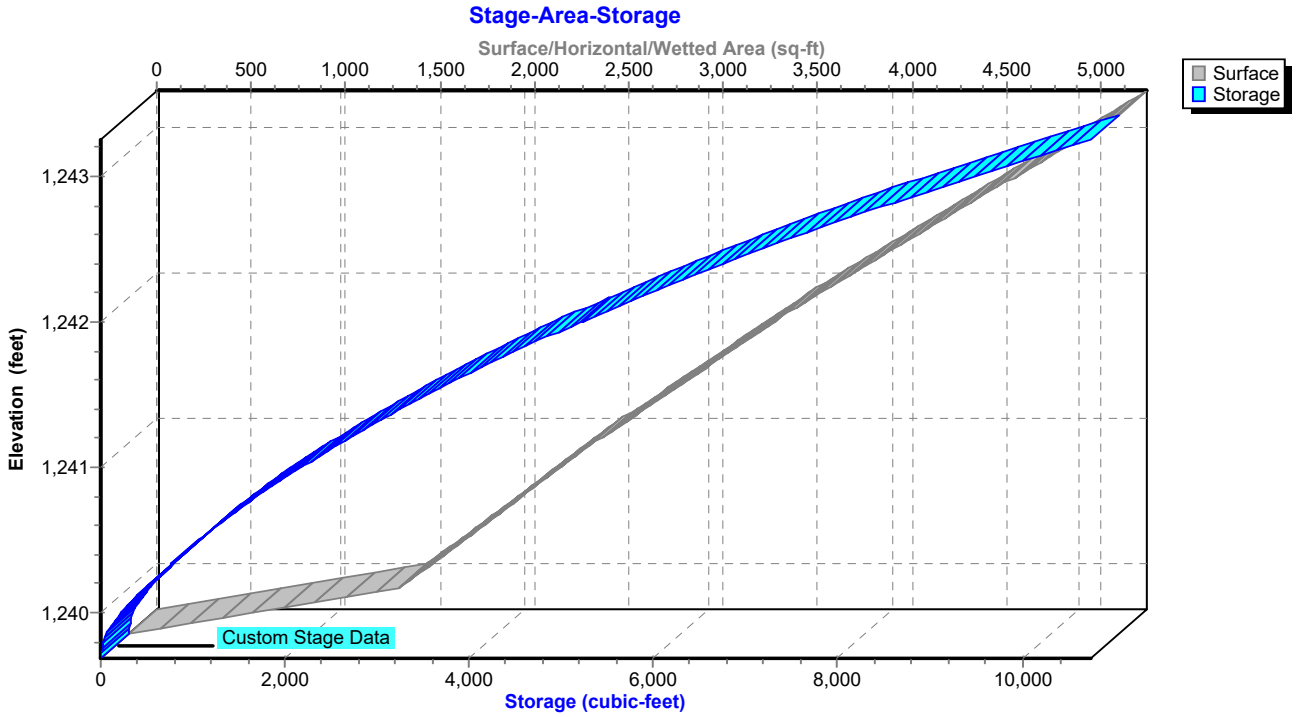

Hydrograph for Pond 14P: (new Pond)

Time (hours)	Inflow (cfs)	Storage (cubic-feet)	Elevation (feet)	Primary (cfs)
5.00	0.02	1	1,239.70	0.00
5.40	0.02	28	1,239.80	0.00
5.80	0.03	63	1,239.85	0.00
6.20	0.03	105	1,239.90	0.00
6.60	0.04	154	1,239.95	0.00
7.00	0.04	212	1,239.99	0.00
7.40	0.05	277	1,240.04	0.00
7.80	0.05	351	1,240.09	0.00
8.20	0.06	434	1,240.14	0.00
8.60	0.08	535	1,240.20	0.00
9.00	0.10	660	1,240.28	0.00
9.40	0.10	779	1,240.35	0.10
9.80	0.12	780	1,240.35	0.12
10.20	0.15	784	1,240.35	0.15
10.60	0.20	788	1,240.35	0.19
11.00	0.27	795	1,240.36	0.26
11.40	0.43	811	1,240.36	0.41
11.80	**3.00**	**1,246**	**1,240.59**	**2.18**
12.20	**0.88**	**1,140**	**1,240.54**	**1.77**
12.60	0.44	821	1,240.37	0.49
13.00	0.33	803	1,240.36	0.33
13.40	0.26	796	1,240.36	0.27
13.80	0.21	791	1,240.35	0.22
14.20	0.18	787	1,240.35	0.18
14.60	0.17	786	1,240.35	0.17
15.00	0.15	784	1,240.35	0.16
15.40	0.14	783	1,240.35	0.14
15.80	0.13	781	1,240.35	0.13
16.20	0.12	780	1,240.35	0.12
16.60	0.11	780	1,240.35	0.11
17.00	0.11	779	1,240.35	0.11
17.40	0.10	779	1,240.35	0.10
17.80	0.10	778	1,240.35	0.10
18.20	0.09	778	1,240.35	0.09
18.60	0.09	777	1,240.34	0.09
19.00	0.08	777	1,240.34	0.08
19.40	0.07	776	1,240.34	0.08
19.80	0.07	776	1,240.34	0.07

Stage-Discharge for Pond 14P: (new Pond)

Elevation (feet)	Primary (cfs)	Elevation (feet)	Primary (cfs)	Elevation (feet)	Primary (cfs)	Elevation (feet)	Primary (cfs)
1,239.69	0.00	1,240.73	3.32	1,241.77	7.54	1,242.81	9.92
1,239.71	0.00	1,240.75	3.50	1,241.79	7.60	1,242.83	9.96
1,239.73	0.00	1,240.77	3.67	1,241.81	7.65	1,242.85	10.00
1,239.75	0.00	1,240.79	3.84	1,241.83	7.70	1,242.87	10.04
1,239.77	0.00	1,240.81	3.98	1,241.85	7.75	1,242.89	10.08
1,239.79	0.00	1,240.83	4.13	1,241.87	7.80	1,242.91	10.11
1,239.81	0.00	1,240.85	4.26	1,241.89	7.86	1,242.93	10.15
1,239.83	0.00	1,240.87	4.40	1,241.91	7.91	1,242.95	10.19
1,239.85	0.00	1,240.89	4.53	1,241.93	7.96	1,242.97	10.23
1,239.87	0.00	1,240.91	4.66	1,241.95	8.01	1,242.99	10.27
1,239.89	0.00	1,240.93	4.78	1,241.97	8.06	1,243.01	10.31
1,239.91	0.00	1,240.95	4.90	1,241.99	8.10	1,243.03	10.35
1,239.93	0.00	1,240.97	5.00	1,242.01	8.15	1,243.05	10.39
1,239.95	0.00	1,240.99	5.09	1,242.03	8.20	1,243.07	10.42
1,239.97	0.00	1,241.01	5.16	1,242.05	8.25	1,243.09	10.46
1,239.99	0.00	1,241.03	5.24	1,242.07	8.30	1,243.11	10.50
1,240.01	0.00	1,241.05	5.32	1,242.09	8.35	1,243.13	10.54
1,240.03	0.00	1,241.07	5.39	1,242.11	8.39	1,243.15	10.58
1,240.05	0.00	1,241.09	5.46	1,242.13	8.44	1,243.17	10.61
1,240.07	0.00	1,241.11	5.54	1,242.15	8.49	1,243.19	10.65
1,240.09	0.00	1,241.13	5.61	1,242.17	8.54	1,243.21	10.69
1,240.11	0.00	1,241.15	5.68	1,242.19	8.58	1,243.23	10.73
1,240.13	0.00	1,241.17	5.75	1,242.21	8.63	1,243.25	**10.76**
1,240.15	0.00	1,241.19	5.82	1,242.23	8.67		
1,240.17	0.00	1,241.21	5.88	1,242.25	8.72		
1,240.19	0.00	1,241.23	5.95	1,242.27	8.77		
1,240.21	0.00	1,241.25	6.02	1,242.29	8.81		
1,240.23	0.00	1,241.27	6.08	1,242.31	8.86		
1,240.25	0.00	1,241.29	6.15	1,242.33	8.90		
1,240.27	0.00	1,241.31	6.21	1,242.35	8.95		
1,240.29	0.00	1,241.33	6.28	1,242.37	8.99		
1,240.31	0.00	1,241.35	6.34	1,242.39	9.03		
1,240.33	0.00	1,241.37	6.40	1,242.41	9.08		
1,240.35	0.27	1,241.39	6.47	1,242.43	9.12		
1,240.37	0.50	1,241.41	6.53	1,242.45	9.16		
1,240.39	0.67	1,241.43	6.59	1,242.47	9.21		
1,240.41	0.83	1,241.45	6.65	1,242.49	9.25		
1,240.43	0.98	1,241.47	6.71	1,242.51	9.29		
1,240.45	1.13	1,241.49	6.77	1,242.53	9.34		
1,240.47	1.27	1,241.51	6.82	1,242.55	9.38		
1,240.49	1.42	1,241.53	6.88	1,242.57	9.42		
1,240.51	1.57	1,241.55	6.94	1,242.59	9.46		
1,240.53	1.72	1,241.57	7.00	1,242.61	9.51		
1,240.55	1.87	1,241.59	7.05	1,242.63	9.55		
1,240.57	2.02	1,241.61	7.11	1,242.65	9.59		
1,240.59	2.18	1,241.63	7.17	1,242.67	9.63		
1,240.61	2.33	1,241.65	7.22	1,242.69	9.67		
1,240.63	2.49	1,241.67	7.28	1,242.71	9.71		
1,240.65	2.65	1,241.69	7.33	1,242.73	9.75		
1,240.67	2.82	1,241.71	7.38	1,242.75	9.79		
1,240.69	2.98	1,241.73	7.44	1,242.77	9.84		
1,240.71	3.15	1,241.75	7.49	1,242.79	9.88		

Stage-Area-Storage for Pond 14P: (new Pond)

Elevation (feet)	Surface (sq-ft)	Storage (cubic-feet)
1,239.69	0	0
1,239.74	231	6
1,239.79	462	23
1,239.84	693	52
1,239.89	924	92
1,239.94	1,155	144
1,239.99	1,386	208
1,240.04	1,473	280
1,240.09	1,525	355
1,240.14	1,576	433
1,240.19	1,628	513
1,240.24	1,679	595
1,240.29	1,730	681
1,240.34	1,782	768
1,240.39	1,833	859
1,240.44	1,885	952
1,240.49	1,936	1,047
1,240.54	1,988	1,145
1,240.59	2,039	1,246
1,240.64	2,091	1,349
1,240.69	2,142	1,455
1,240.74	2,193	1,563
1,240.79	2,245	1,674
1,240.84	2,296	1,788
1,240.89	2,348	1,904
1,240.94	2,399	2,023
1,240.99	2,451	2,144
1,241.04	2,507	2,268
1,241.09	2,565	2,395
1,241.14	2,623	2,524
1,241.19	2,681	2,657
1,241.24	2,739	2,792
1,241.29	2,797	2,931
1,241.34	2,855	3,072
1,241.39	2,913	3,216
1,241.44	2,971	3,363
1,241.49	3,028	3,513
1,241.54	3,086	3,666
1,241.59	3,144	3,822
1,241.64	3,202	3,981
1,241.69	3,260	4,142
1,241.74	3,318	4,307
1,241.79	3,376	4,474
1,241.84	3,434	4,644
1,241.89	3,492	4,817
1,241.94	3,550	4,993
1,241.99	3,607	5,172
1,242.04	3,671	5,354
1,242.09	3,736	5,539
1,242.14	3,801	5,728
1,242.19	3,866	5,920
1,242.24	3,931	6,114
1,242.29	3,996	6,313
1,242.34	4,061	6,514
1,242.39	4,126	6,719
1,242.44	4,191	6,927
1,242.49	4,256	7,138
1,242.54	4,321	7,352
1,242.59	4,386	7,570
1,242.64	4,451	7,791
1,242.69	4,516	8,015
1,242.74	4,581	8,242
1,242.79	4,646	8,473
1,242.84	4,711	8,707
1,242.89	4,776	8,944
1,242.94	4,841	9,185
1,242.99	4,906	9,428
1,243.04	4,971	9,675
1,243.09	5,036	9,925
1,243.14	5,101	10,179
1,243.19	5,166	10,436
1,243.24	**5,231**	**10,695**

Summary for Link 15L: (new Link)

Inflow Area = 1.254 ac, 68.26% Impervious, Inflow Depth > 3.22" for 5 year event
Inflow = 5.84 cfs @ 12.00 hrs, Volume= 0.336 af
Primary = 5.84 cfs @ 12.00 hrs, Volume= 0.336 af, Atten= 0%, Lag= 0.0 min

Primary outflow = Inflow, Time Span= 5.00-20.00 hrs, dt= 0.02 hrs

Link 15L: (new Link)

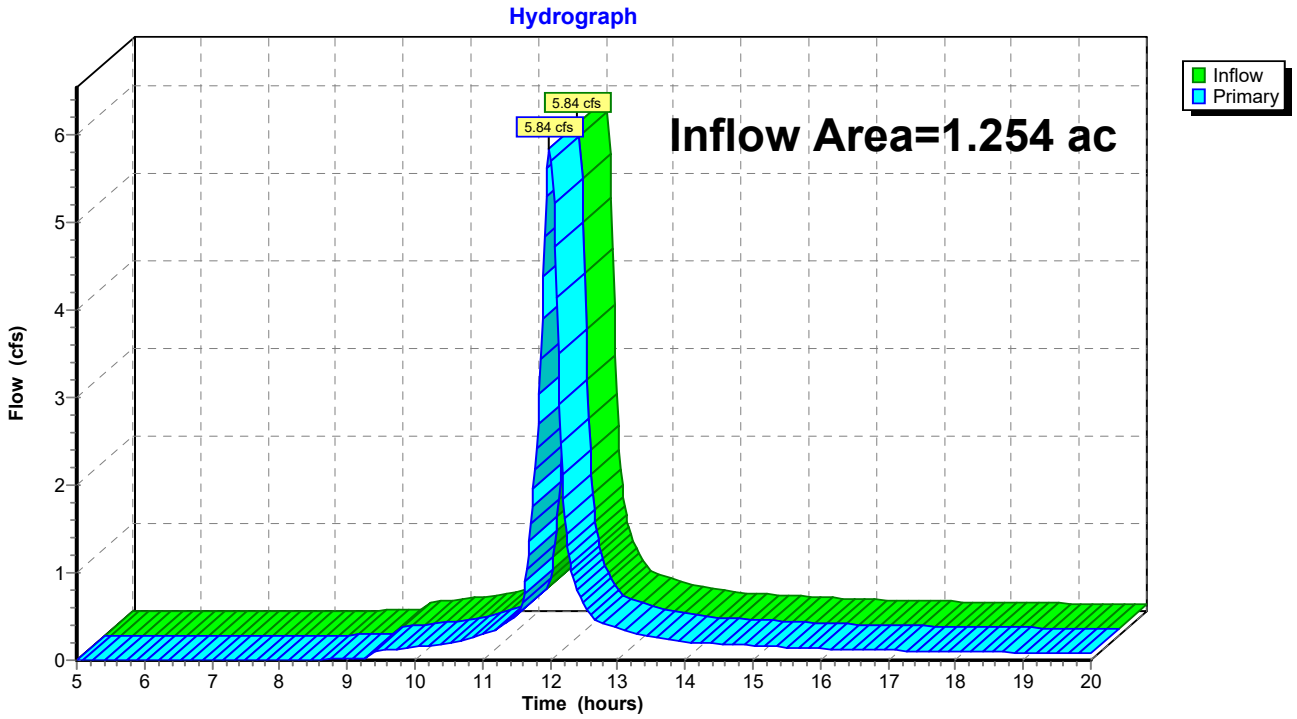

Hydrograph for Link 15L: (new Link)

Time (hours)	Inflow (cfs)	Elevation (feet)	Primary (cfs)
5.00	0.00	**0.00**	0.00
5.20	0.01	0.00	0.01
5.40	0.01	0.00	0.01
5.60	0.01	0.00	0.01
5.80	0.01	0.00	0.01
6.00	0.01	0.00	0.01
6.20	0.01	0.00	0.01
6.40	0.01	0.00	0.01
6.60	0.01	0.00	0.01
6.80	0.01	0.00	0.01
7.00	0.01	0.00	0.01
7.20	0.01	0.00	0.01
7.40	0.01	0.00	0.01
7.60	0.01	0.00	0.01
7.80	0.01	0.00	0.01
8.00	0.01	0.00	0.01
8.20	0.01	0.00	0.01
8.40	0.01	0.00	0.01
8.60	0.01	0.00	0.01
8.80	0.01	0.00	0.01
9.00	0.01	0.00	0.01
9.20	0.01	0.00	0.01
9.40	0.11	0.00	0.11
9.60	0.12	0.00	0.12
9.80	0.13	0.00	0.13
10.00	0.15	0.00	0.15
10.20	0.17	0.00	0.17
10.40	0.19	0.00	0.19
10.60	0.21	0.00	0.21
10.80	0.25	0.00	0.25
11.00	0.29	0.00	0.29
11.20	0.36	0.00	0.36
11.40	0.45	0.00	0.45
11.60	0.66	0.00	0.66
11.80	2.43	0.00	2.43
12.00	**5.84**	0.00	**5.84**
12.20	1.84	0.00	1.84
12.40	0.81	0.00	0.81
12.60	0.52	0.00	0.52
12.80	0.42	0.00	0.42
13.00	0.36	0.00	0.36
13.20	0.32	0.00	0.32
13.40	0.29	0.00	0.29
13.60	0.26	0.00	0.26
13.80	0.23	0.00	0.23
14.00	0.21	0.00	0.21
14.20	0.20	0.00	0.20
14.40	0.19	0.00	0.19
14.60	0.18	0.00	0.18
14.80	0.18	0.00	0.18
15.00	0.17	0.00	0.17
15.20	0.16	0.00	0.16
15.40	0.15	0.00	0.15
15.60	0.14	0.00	0.14
15.80	0.14	0.00	0.14
16.00	0.13	0.00	0.13
16.20	0.12	0.00	0.12
16.40	0.12	0.00	0.12
16.60	0.12	0.00	0.12
16.80	0.12	0.00	0.12
17.00	0.11	0.00	0.11
17.20	0.11	0.00	0.11
17.40	0.11	0.00	0.11
17.60	0.11	0.00	0.11
17.80	0.10	0.00	0.10
18.00	0.10	0.00	0.10
18.20	0.10	0.00	0.10
18.40	0.09	0.00	0.09
18.60	0.09	0.00	0.09
18.80	0.09	0.00	0.09
19.00	0.09	0.00	0.09
19.20	0.08	0.00	0.08
19.40	0.08	0.00	0.08
19.60	0.08	0.00	0.08
19.80	0.08	0.00	0.08
20.00	0.07	0.00	0.07

Summary for Subcatchment 12S: Historic

Runoff = 8.42 cfs @ 11.96 hrs, Volume= 0.373 af, Depth> 3.57"

Runoff by SCS TR-20 method, UH=SCS, Weighted-CN, Time Span= 5.00-20.00 hrs, dt= 0.02 hrs
Type II 24-hr 10 year Rainfall=5.37"

Area (ac)	CN	Description
0.384	98	Paved parking, HSG D
0.870	80	>75% Grass cover, Good, HSG D
1.254	86	Weighted Average
0.870		69.38% Pervious Area
0.384		30.62% Impervious Area

Tc (min)	Length (feet)	Slope (ft/ft)	Velocity (ft/sec)	Capacity (cfs)	Description
5.0					**Direct Entry, Minimum**

Subcatchment 12S: Historic

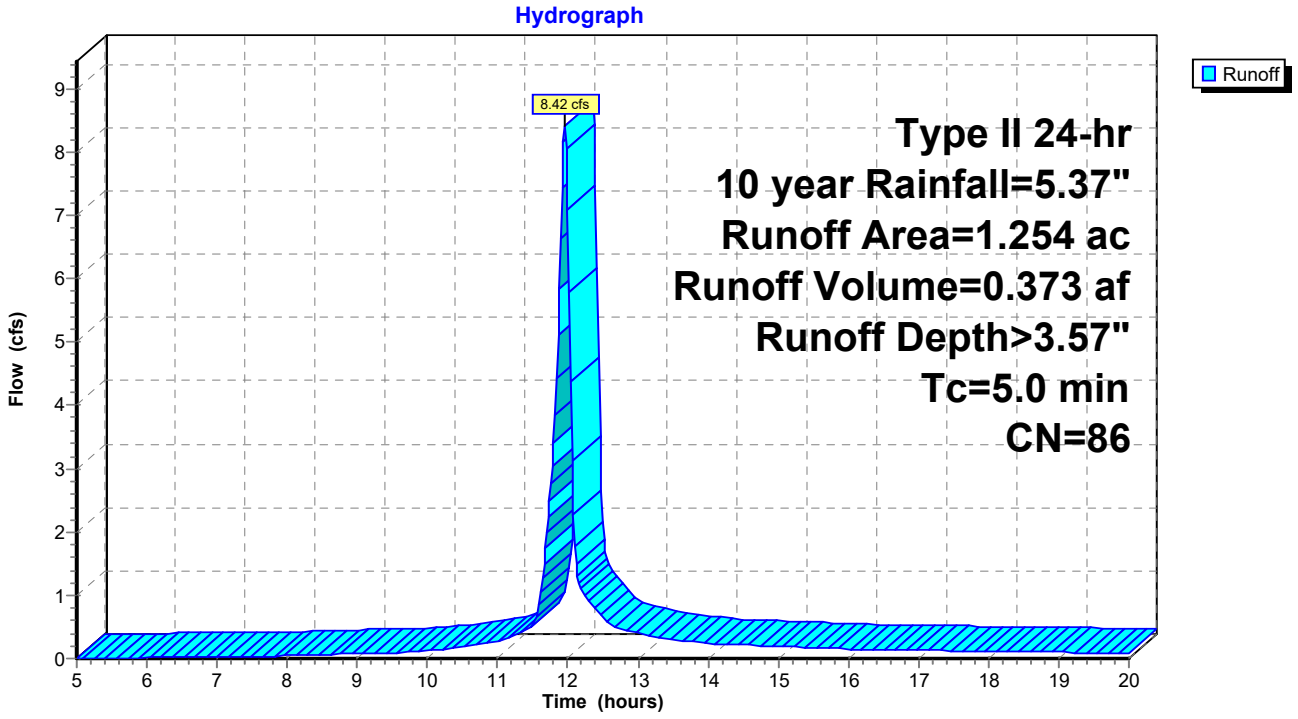

Hydrograph for Subcatchment 12S: Historic

Time (hours)	Precip. (inches)	Excess (inches)	Runoff (cfs)
5.00	0.34	0.00	0.00
5.20	0.36	0.00	0.00
5.40	0.37	0.00	0.01
5.60	0.39	0.00	0.01
5.80	0.41	0.00	0.01
6.00	0.43	0.01	0.01
6.20	0.45	0.01	0.02
6.40	0.47	0.01	0.02
6.60	0.49	0.02	0.02
6.80	0.51	0.02	0.02
7.00	0.53	0.02	0.03
7.20	0.55	0.03	0.03
7.40	0.58	0.03	0.03
7.60	0.60	0.04	0.04
7.80	0.62	0.05	0.04
8.00	0.64	0.05	0.04
8.20	0.67	0.06	0.05
8.40	0.70	0.07	0.06
8.60	0.72	0.08	0.06
8.80	0.76	0.09	0.07
9.00	0.79	0.10	0.08
9.20	0.82	0.12	0.09
9.40	0.86	0.13	0.09
9.60	0.89	0.15	0.10
9.80	0.93	0.16	0.11
10.00	0.97	0.18	0.13
10.20	1.02	0.21	0.15
10.40	1.07	0.23	0.17
10.60	1.12	0.26	0.20
10.80	1.19	0.30	0.23
11.00	1.26	0.34	0.28
11.20	1.35	0.40	0.35
11.40	1.46	0.46	0.45
11.60	1.65	0.59	0.87
11.80	2.31	1.09	**3.39**
12.00	3.56	2.15	**7.09**
12.20	3.75	2.32	1.07
12.40	3.89	2.45	0.78
12.60	3.99	2.54	0.53
12.80	4.07	2.61	0.46
13.00	4.15	2.68	0.40
13.20	4.21	2.74	0.36
13.40	4.26	2.79	0.32
13.60	4.32	2.83	0.29
13.80	4.36	2.88	0.26
14.00	4.40	2.91	0.24
14.20	4.44	2.95	0.23
14.40	4.48	2.98	0.22
14.60	4.52	3.02	0.21
14.80	4.55	3.05	0.20
15.00	4.58	3.08	0.19
15.20	4.61	3.11	0.18
15.40	4.64	3.14	0.17
15.60	4.67	3.16	0.17
15.80	4.70	3.19	0.16
16.00	4.73	3.21	0.15
16.20	4.75	3.23	0.14
16.40	4.77	3.26	0.14
16.60	4.80	3.28	0.14
16.80	4.82	3.30	0.13
17.00	4.84	3.32	0.13
17.20	4.86	3.34	0.13
17.40	4.89	3.36	0.12
17.60	4.91	3.38	0.12
17.80	4.93	3.40	0.12
18.00	4.95	3.42	0.12
18.20	4.96	3.43	0.11
18.40	4.98	3.45	0.11
18.60	5.00	3.47	0.11
18.80	5.02	3.48	0.10
19.00	5.04	3.50	0.10
19.20	5.05	3.52	0.10
19.40	5.07	3.53	0.09
19.60	5.08	3.54	0.09
19.80	5.10	3.56	0.09
20.00	**5.11**	**3.57**	0.08

Summary for Subcatchment 13S: Developed

Runoff = 0.68 cfs @ 11.96 hrs, Volume= 0.034 af, Depth> 4.70"

Runoff by SCS TR-20 method, UH=SCS, Weighted-CN, Time Span= 5.00-20.00 hrs, dt= 0.02 hrs
Type II 24-hr 10 year Rainfall=5.37"

Area (ac)	CN	Description
0.086	98	Paved parking, HSG D
0.086		100.00% Impervious Area

Tc (min)	Length (feet)	Slope (ft/ft)	Velocity (ft/sec)	Capacity (cfs)	Description
5.0					**Direct Entry, Minimum**

Subcatchment 13S: Developed

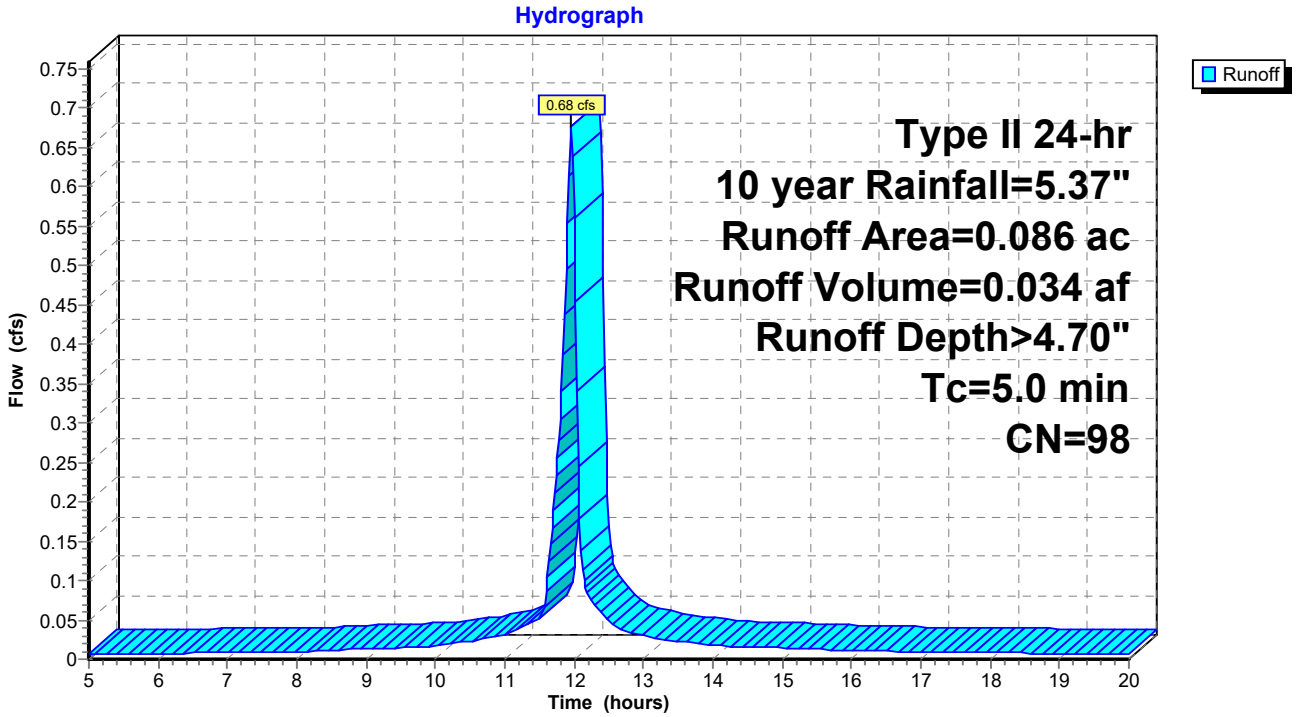

Hydrograph for Subcatchment 13S: Developed

Time (hours)	Precip. (inches)	Excess (inches)	Runoff (cfs)
5.00	0.34	0.18	0.01
5.20	0.36	0.19	0.01
5.40	0.37	0.21	0.01
5.60	0.39	0.22	0.01
5.80	0.41	0.24	0.01
6.00	0.43	0.25	0.01
6.20	0.45	0.27	0.01
6.40	0.47	0.29	0.01
6.60	0.49	0.31	0.01
6.80	0.51	0.33	0.01
7.00	0.53	0.35	0.01
7.20	0.55	0.37	0.01
7.40	0.58	0.39	0.01
7.60	0.60	0.41	0.01
7.80	0.62	0.43	0.01
8.00	0.64	0.45	0.01
8.20	0.67	0.47	0.01
8.40	0.70	0.50	0.01
8.60	0.72	0.53	0.01
8.80	0.76	0.56	0.01
9.00	0.79	0.59	0.01
9.20	0.82	0.62	0.01
9.40	0.86	0.65	0.01
9.60	0.89	0.69	0.01
9.80	0.93	0.72	0.02
10.00	0.97	0.76	0.02
10.20	1.02	0.81	0.02
10.40	1.07	0.86	0.02
10.60	1.12	0.91	0.02
10.80	1.19	0.97	0.03
11.00	1.26	1.05	0.03
11.20	1.35	1.13	0.04
11.40	1.46	1.24	0.05
11.60	1.65	1.43	0.09
11.80	2.31	2.09	**0.30**
12.00	3.56	3.33	**0.56**
12.20	3.75	3.52	0.08
12.40	3.89	3.66	0.06
12.60	3.99	3.76	0.04
12.80	4.07	3.84	0.04
13.00	4.15	3.91	0.03
13.20	4.21	3.97	0.03
13.40	4.26	4.03	0.02
13.60	4.32	4.08	0.02
13.80	4.36	4.13	0.02
14.00	4.40	4.17	0.02
14.20	4.44	4.21	0.02
14.40	4.48	4.24	0.02
14.60	4.52	4.28	0.02
14.80	4.55	4.31	0.01
15.00	4.58	4.35	0.01
15.20	4.61	4.38	0.01
15.40	4.64	4.41	0.01
15.60	4.67	4.44	0.01
15.80	4.70	4.46	0.01
16.00	4.73	4.49	0.01
16.20	4.75	4.51	0.01
16.40	4.77	4.54	0.01
16.60	4.80	4.56	0.01
16.80	4.82	4.58	0.01
17.00	4.84	4.61	0.01
17.20	4.86	4.63	0.01
17.40	4.89	4.65	0.01
17.60	4.91	4.67	0.01
17.80	4.93	4.69	0.01
18.00	4.95	4.71	0.01
18.20	4.96	4.73	0.01
18.40	4.98	4.75	0.01
18.60	5.00	4.76	0.01
18.80	5.02	4.78	0.01
19.00	5.04	4.80	0.01
19.20	5.05	4.82	0.01
19.40	5.07	4.83	0.01
19.60	5.08	4.85	0.01
19.80	5.10	4.86	0.01
20.00	**5.11**	**4.88**	0.01

Summary for Subcatchment 16S: Developed

Runoff = 8.69 cfs @ 11.96 hrs, Volume= 0.406 af, Depth> 4.17"

Runoff by SCS TR-20 method, UH=SCS, Weighted-CN, Time Span= 5.00-20.00 hrs, dt= 0.02 hrs
Type II 24-hr 10 year Rainfall=5.37"

Area (ac)	CN	Description
0.770	98	Paved parking, HSG D
0.398	80	>75% Grass cover, Good, HSG D
1.168	92	Weighted Average
0.398		34.08% Pervious Area
0.770		65.92% Impervious Area

Tc (min)	Length (feet)	Slope (ft/ft)	Velocity (ft/sec)	Capacity (cfs)	Description
5.0					**Direct Entry, Minimum**

Subcatchment 16S: Developed

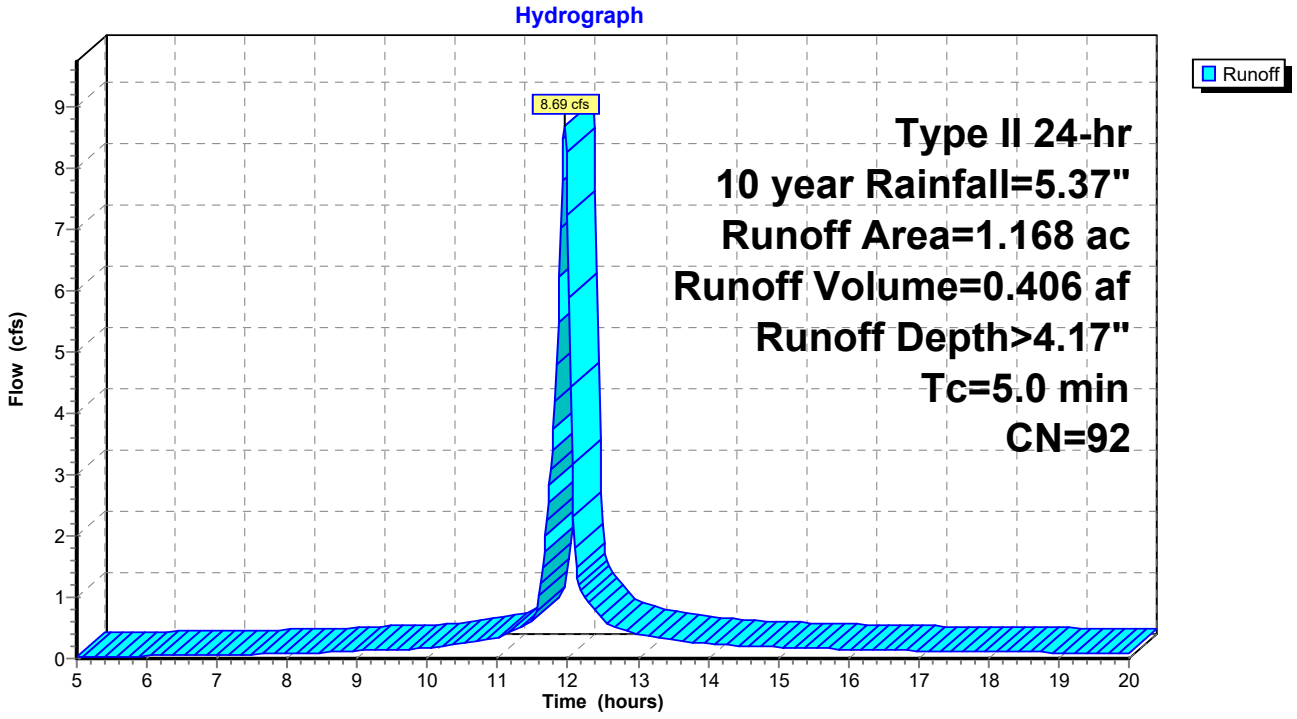

Hydrograph for Subcatchment 16S: Developed

Time (hours)	Precip. (inches)	Excess (inches)	Runoff (cfs)
5.00	0.34	0.03	0.03
5.20	0.36	0.03	0.03
5.40	0.37	0.04	0.03
5.60	0.39	0.04	0.04
5.80	0.41	0.05	0.04
6.00	0.43	0.06	0.04
6.20	0.45	0.07	0.05
6.40	0.47	0.07	0.05
6.60	0.49	0.08	0.05
6.80	0.51	0.09	0.06
7.00	0.53	0.10	0.06
7.20	0.55	0.12	0.07
7.40	0.58	0.13	0.07
7.60	0.60	0.14	0.07
7.80	0.62	0.15	0.08
8.00	0.64	0.17	0.08
8.20	0.67	0.18	0.09
8.40	0.70	0.20	0.10
8.60	0.72	0.21	0.11
8.80	0.76	0.23	0.12
9.00	0.79	0.26	0.13
9.20	0.82	0.28	0.13
9.40	0.86	0.30	0.14
9.60	0.89	0.33	0.14
9.80	0.93	0.35	0.16
10.00	0.97	0.38	0.18
10.20	1.02	0.42	0.20
10.40	1.07	0.45	0.23
10.60	1.12	0.50	0.26
10.80	1.19	0.55	0.30
11.00	1.26	0.60	0.35
11.20	1.35	0.68	0.43
11.40	1.46	0.77	0.54
11.60	1.65	0.93	1.02
11.80	2.31	1.52	**3.74**
12.00	3.56	2.69	**7.23**
12.20	3.75	2.88	1.07
12.40	3.89	3.02	0.78
12.60	3.99	3.11	0.53
12.80	4.07	3.19	0.46
13.00	4.15	3.26	0.40
13.20	4.21	3.32	0.35
13.40	4.26	3.37	0.32
13.60	4.32	3.42	0.29
13.80	4.36	3.47	0.26
14.00	4.40	3.51	0.24
14.20	4.44	3.55	0.22
14.40	4.48	3.58	0.21
14.60	4.52	3.62	0.20
14.80	4.55	3.65	0.20
15.00	4.58	3.68	0.19
15.20	4.61	3.71	0.18
15.40	4.64	3.74	0.17
15.60	4.67	3.77	0.16
15.80	4.70	3.80	0.15
16.00	4.73	3.82	0.15
16.20	4.75	3.85	0.14
16.40	4.77	3.87	0.14
16.60	4.80	3.89	0.13
16.80	4.82	3.91	0.13
17.00	4.84	3.94	0.13
17.20	4.86	3.96	0.12
17.40	4.89	3.98	0.12
17.60	4.91	4.00	0.12
17.80	4.93	4.02	0.12
18.00	4.95	4.04	0.11
18.20	4.96	4.05	0.11
18.40	4.98	4.07	0.11
18.60	5.00	4.09	0.10
18.80	5.02	4.11	0.10
19.00	5.04	4.12	0.10
19.20	5.05	4.14	0.09
19.40	5.07	4.16	0.09
19.60	5.08	4.17	0.09
19.80	5.10	4.19	0.08
20.00	**5.11**	**4.20**	0.08

Summary for Pond 14P: (new Pond)

Inflow Area = 1.168 ac, 65.92% Impervious, Inflow Depth > 4.17" for 10 year event
Inflow = 8.69 cfs @ 11.96 hrs, Volume= 0.406 af
Outflow = 6.13 cfs @ 12.02 hrs, Volume= 0.388 af, Atten= 29%, Lag= 3.6 min
Primary = 6.13 cfs @ 12.02 hrs, Volume= 0.388 af

Routing by Stor-Ind method, Time Span= 5.00-20.00 hrs, dt= 0.02 hrs
Peak Elev= 1,241.28' @ 12.02 hrs Surf.Area= 2,790 sf Storage= 2,914 cf

Plug-Flow detention time= 35.2 min calculated for 0.388 af (96% of inflow)
Center-of-Mass det. time= 17.4 min (763.1 - 745.7)

Volume	Invert	Avail.Storage	Storage Description
#1	1,239.69'	10,748 cf	**Custom Stage Data (Prismatic)** Listed below (Recalc)

Elevation (feet)	Surf.Area (sq-ft)	Inc.Store (cubic-feet)	Cum.Store (cubic-feet)
1,239.69	0	0	0
1,240.00	1,432	222	222
1,241.00	2,461	1,947	2,168
1,242.00	3,619	3,040	5,208
1,243.25	5,244	5,539	10,748

Device	Routing	Invert	Outlet Devices
#1	Primary	1,239.69'	**18.0" Round Culvert** L= 26.0' RCP, square edge headwall, Ke= 0.500 Inlet / Outlet Invert= 1,239.69' / 1,239.47' S= 0.0085 '/' Cc= 0.900 n= 0.013, Flow Area= 1.77 sf
#2	Device 1	1,239.69'	**15.5" Vert. Orifice/Grate** C= 0.600

Primary OutFlow Max=6.12 cfs @ 12.02 hrs HW=1,241.28' TW=1,240.34' (Fixed TW Elev= 1,240.34')
↑**1=Culvert** (Passes 6.12 cfs of 6.96 cfs potential flow)
↑**2=Orifice/Grate** (Orifice Controls 6.12 cfs @ 4.67 fps)

Pond 14P: (new Pond)

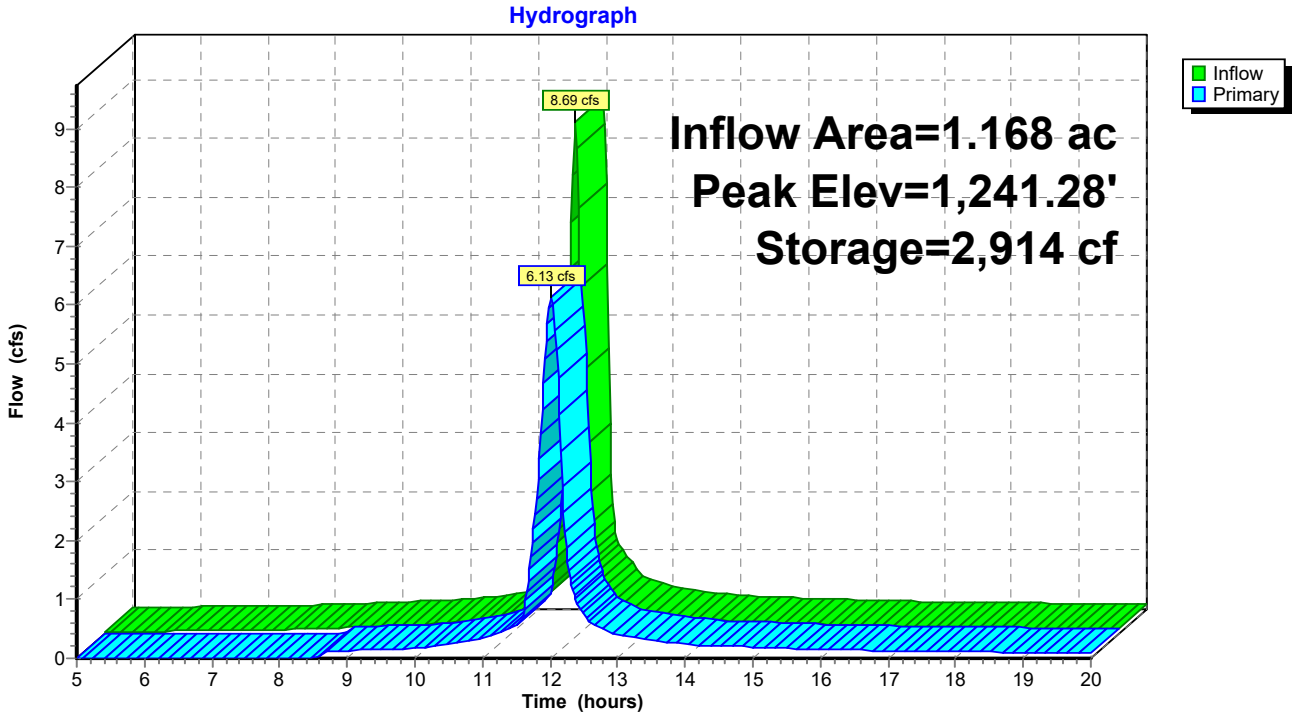

Pond 14P: (new Pond)

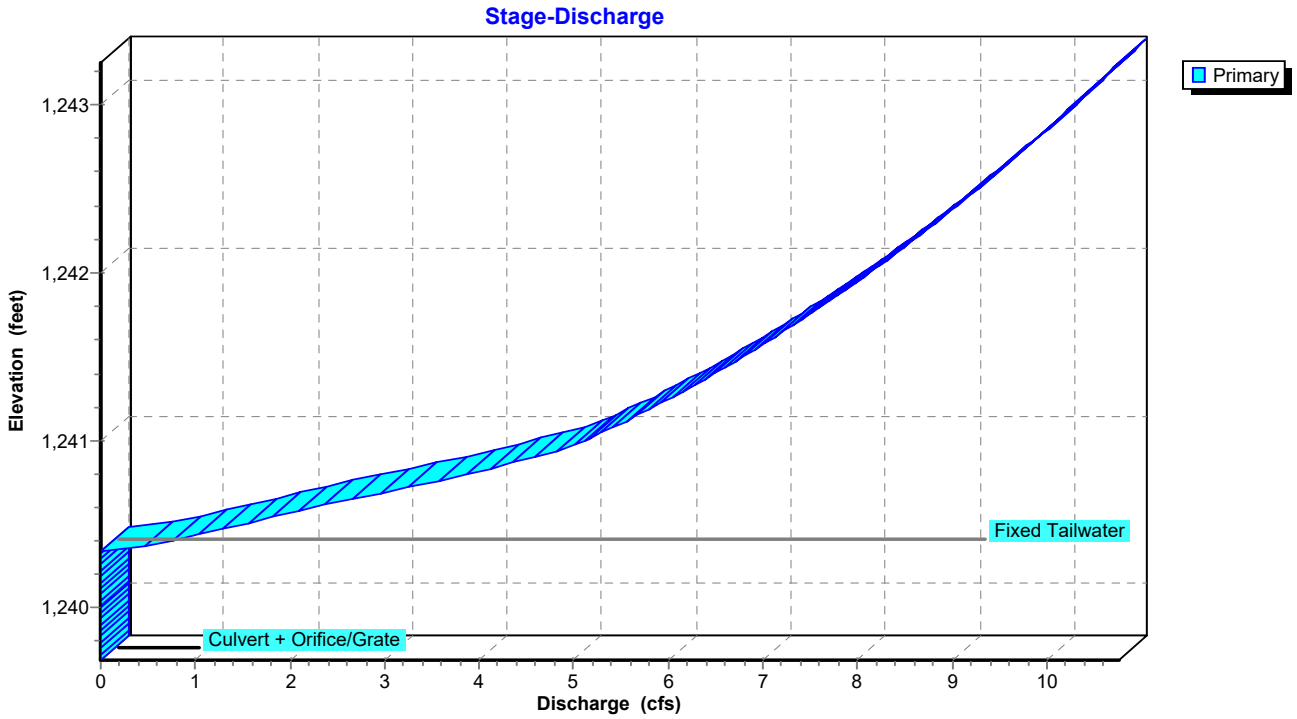

Pond 14P: (new Pond)

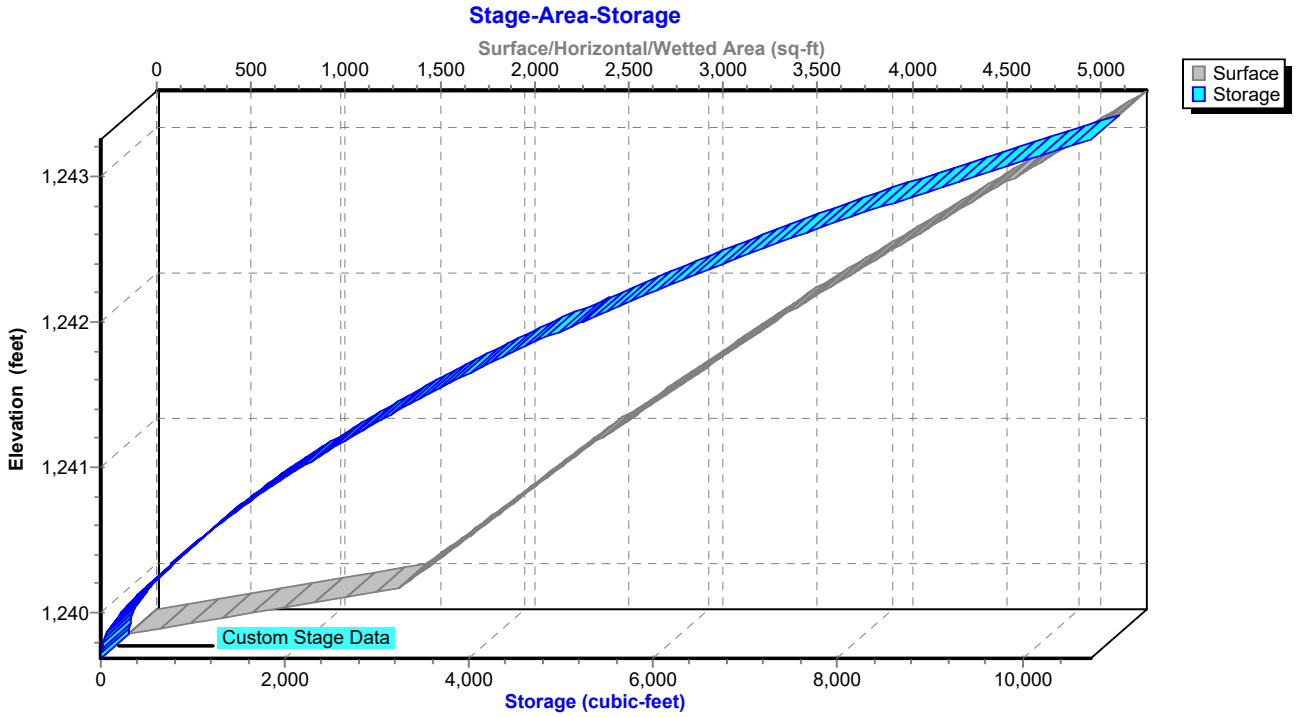

Hydrograph for Pond 14P: (new Pond)

Time (hours)	Inflow (cfs)	Storage (cubic-feet)	Elevation (feet)	Primary (cfs)
5.00	0.03	1	1,239.70	0.00
5.40	0.03	46	1,239.83	0.00
5.80	0.04	101	1,239.90	0.00
6.20	0.05	165	1,239.96	0.00
6.60	0.05	239	1,240.01	0.00
7.00	0.06	323	1,240.07	0.00
7.40	0.07	417	1,240.13	0.00
7.80	0.08	521	1,240.19	0.00
8.20	0.09	636	1,240.26	0.00
8.60	0.11	773	1,240.34	0.04
9.00	0.13	781	1,240.35	0.13
9.40	0.14	782	1,240.35	0.14
9.80	0.16	784	1,240.35	0.16
10.20	0.20	788	1,240.35	0.20
10.60	0.26	794	1,240.35	0.25
11.00	0.35	803	1,240.36	0.34
11.40	0.54	826	1,240.37	0.51
11.80	**3.74**	**1,387**	**1,240.66**	**2.72**
12.20	**1.07**	**1,325**	**1,240.63**	**2.48**
12.60	0.53	844	1,240.38	0.60
13.00	0.40	810	1,240.36	0.41
13.40	0.32	801	1,240.36	0.32
13.80	0.26	795	1,240.36	0.26
14.20	0.22	791	1,240.35	0.22
14.60	0.20	789	1,240.35	0.21
15.00	0.19	788	1,240.35	0.19
15.40	0.17	786	1,240.35	0.17
15.80	0.15	784	1,240.35	0.15
16.20	0.14	783	1,240.35	0.14
16.60	0.13	782	1,240.35	0.13
17.00	0.13	781	1,240.35	0.13
17.40	0.12	781	1,240.35	0.12
17.80	0.12	780	1,240.35	0.12
18.20	0.11	780	1,240.35	0.11
18.60	0.10	779	1,240.35	0.10
19.00	0.10	778	1,240.35	0.10
19.40	0.09	778	1,240.35	0.09
19.80	0.08	777	1,240.34	0.09

Stage-Discharge for Pond 14P: (new Pond)

Elevation (feet)	Primary (cfs)	Elevation (feet)	Primary (cfs)	Elevation (feet)	Primary (cfs)	Elevation (feet)	Primary (cfs)
1,239.69	0.00	1,240.73	3.32	1,241.77	7.54	1,242.81	9.92
1,239.71	0.00	1,240.75	3.50	1,241.79	7.60	1,242.83	9.96
1,239.73	0.00	1,240.77	3.67	1,241.81	7.65	1,242.85	10.00
1,239.75	0.00	1,240.79	3.84	1,241.83	7.70	1,242.87	10.04
1,239.77	0.00	1,240.81	3.98	1,241.85	7.75	1,242.89	10.08
1,239.79	0.00	1,240.83	4.13	1,241.87	7.80	1,242.91	10.11
1,239.81	0.00	1,240.85	4.26	1,241.89	7.86	1,242.93	10.15
1,239.83	0.00	1,240.87	4.40	1,241.91	7.91	1,242.95	10.19
1,239.85	0.00	1,240.89	4.53	1,241.93	7.96	1,242.97	10.23
1,239.87	0.00	1,240.91	4.66	1,241.95	8.01	1,242.99	10.27
1,239.89	0.00	1,240.93	4.78	1,241.97	8.06	1,243.01	10.31
1,239.91	0.00	1,240.95	4.90	1,241.99	8.10	1,243.03	10.35
1,239.93	0.00	1,240.97	5.00	1,242.01	8.15	1,243.05	10.39
1,239.95	0.00	1,240.99	5.09	1,242.03	8.20	1,243.07	10.42
1,239.97	0.00	1,241.01	5.16	1,242.05	8.25	1,243.09	10.46
1,239.99	0.00	1,241.03	5.24	1,242.07	8.30	1,243.11	10.50
1,240.01	0.00	1,241.05	5.32	1,242.09	8.35	1,243.13	10.54
1,240.03	0.00	1,241.07	5.39	1,242.11	8.39	1,243.15	10.58
1,240.05	0.00	1,241.09	5.46	1,242.13	8.44	1,243.17	10.61
1,240.07	0.00	1,241.11	5.54	1,242.15	8.49	1,243.19	10.65
1,240.09	0.00	1,241.13	5.61	1,242.17	8.54	1,243.21	10.69
1,240.11	0.00	1,241.15	5.68	1,242.19	8.58	1,243.23	10.73
1,240.13	0.00	1,241.17	5.75	1,242.21	8.63	1,243.25	**10.76**
1,240.15	0.00	1,241.19	5.82	1,242.23	8.67		
1,240.17	0.00	1,241.21	5.88	1,242.25	8.72		
1,240.19	0.00	1,241.23	5.95	1,242.27	8.77		
1,240.21	0.00	1,241.25	6.02	1,242.29	8.81		
1,240.23	0.00	1,241.27	6.08	1,242.31	8.86		
1,240.25	0.00	1,241.29	6.15	1,242.33	8.90		
1,240.27	0.00	1,241.31	6.21	1,242.35	8.95		
1,240.29	0.00	1,241.33	6.28	1,242.37	8.99		
1,240.31	0.00	1,241.35	6.34	1,242.39	9.03		
1,240.33	0.00	1,241.37	6.40	1,242.41	9.08		
1,240.35	0.27	1,241.39	6.47	1,242.43	9.12		
1,240.37	0.50	1,241.41	6.53	1,242.45	9.16		
1,240.39	0.67	1,241.43	6.59	1,242.47	9.21		
1,240.41	0.83	1,241.45	6.65	1,242.49	9.25		
1,240.43	0.98	1,241.47	6.71	1,242.51	9.29		
1,240.45	1.13	1,241.49	6.77	1,242.53	9.34		
1,240.47	1.27	1,241.51	6.82	1,242.55	9.38		
1,240.49	1.42	1,241.53	6.88	1,242.57	9.42		
1,240.51	1.57	1,241.55	6.94	1,242.59	9.46		
1,240.53	1.72	1,241.57	7.00	1,242.61	9.51		
1,240.55	1.87	1,241.59	7.05	1,242.63	9.55		
1,240.57	2.02	1,241.61	7.11	1,242.65	9.59		
1,240.59	2.18	1,241.63	7.17	1,242.67	9.63		
1,240.61	2.33	1,241.65	7.22	1,242.69	9.67		
1,240.63	2.49	1,241.67	7.28	1,242.71	9.71		
1,240.65	2.65	1,241.69	7.33	1,242.73	9.75		
1,240.67	2.82	1,241.71	7.38	1,242.75	9.79		
1,240.69	2.98	1,241.73	7.44	1,242.77	9.84		
1,240.71	3.15	1,241.75	7.49	1,242.79	9.88		

Stage-Area-Storage for Pond 14P: (new Pond)

Elevation (feet)	Surface (sq-ft)	Storage (cubic-feet)
1,239.69	0	0
1,239.74	231	6
1,239.79	462	23
1,239.84	693	52
1,239.89	924	92
1,239.94	1,155	144
1,239.99	1,386	208
1,240.04	1,473	280
1,240.09	1,525	355
1,240.14	1,576	433
1,240.19	1,628	513
1,240.24	1,679	595
1,240.29	1,730	681
1,240.34	1,782	768
1,240.39	1,833	859
1,240.44	1,885	952
1,240.49	1,936	1,047
1,240.54	1,988	1,145
1,240.59	2,039	1,246
1,240.64	2,091	1,349
1,240.69	2,142	1,455
1,240.74	2,193	1,563
1,240.79	2,245	1,674
1,240.84	2,296	1,788
1,240.89	2,348	1,904
1,240.94	2,399	2,023
1,240.99	2,451	2,144
1,241.04	2,507	2,268
1,241.09	2,565	2,395
1,241.14	2,623	2,524
1,241.19	2,681	2,657
1,241.24	2,739	2,792
1,241.29	2,797	2,931
1,241.34	2,855	3,072
1,241.39	2,913	3,216
1,241.44	2,971	3,363
1,241.49	3,028	3,513
1,241.54	3,086	3,666
1,241.59	3,144	3,822
1,241.64	3,202	3,981
1,241.69	3,260	4,142
1,241.74	3,318	4,307
1,241.79	3,376	4,474
1,241.84	3,434	4,644
1,241.89	3,492	4,817
1,241.94	3,550	4,993
1,241.99	3,607	5,172
1,242.04	3,671	5,354
1,242.09	3,736	5,539
1,242.14	3,801	5,728
1,242.19	3,866	5,920
1,242.24	3,931	6,114
1,242.29	3,996	6,313
1,242.34	4,061	6,514
1,242.39	4,126	6,719
1,242.44	4,191	6,927
1,242.49	4,256	7,138
1,242.54	4,321	7,352
1,242.59	4,386	7,570
1,242.64	4,451	7,791
1,242.69	4,516	8,015
1,242.74	4,581	8,242
1,242.79	4,646	8,473
1,242.84	4,711	8,707
1,242.89	4,776	8,944
1,242.94	4,841	9,185
1,242.99	4,906	9,428
1,243.04	4,971	9,675
1,243.09	5,036	9,925
1,243.14	5,101	10,179
1,243.19	5,166	10,436
1,243.24	**5,231**	**10,695**

Summary for Link 15L: (new Link)

Inflow Area = 1.254 ac, 68.26% Impervious, Inflow Depth > 4.04" for 10 year event
Inflow = 6.65 cfs @ 12.00 hrs, Volume= 0.422 af
Primary = 6.65 cfs @ 12.00 hrs, Volume= 0.422 af, Atten= 0%, Lag= 0.0 min

Primary outflow = Inflow, Time Span= 5.00-20.00 hrs, dt= 0.02 hrs

Link 15L: (new Link)

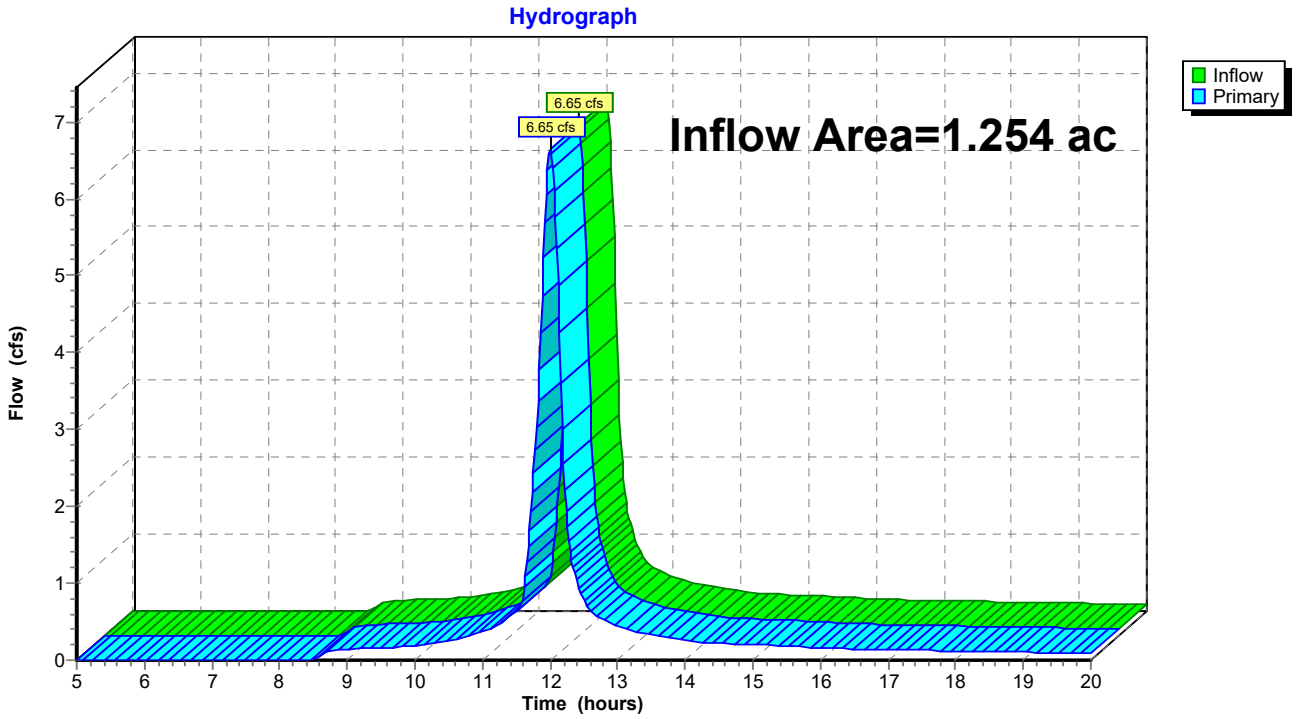

Hydrograph for Link 15L: (new Link)

Time (hours)	Inflow (cfs)	Elevation (feet)	Primary (cfs)
5.00	0.01	**0.00**	0.01
5.20	0.01	0.00	0.01
5.40	0.01	0.00	0.01
5.60	0.01	0.00	0.01
5.80	0.01	0.00	0.01
6.00	0.01	0.00	0.01
6.20	0.01	0.00	0.01
6.40	0.01	0.00	0.01
6.60	0.01	0.00	0.01
6.80	0.01	0.00	0.01
7.00	0.01	0.00	0.01
7.20	0.01	0.00	0.01
7.40	0.01	0.00	0.01
7.60	0.01	0.00	0.01
7.80	0.01	0.00	0.01
8.00	0.01	0.00	0.01
8.20	0.01	0.00	0.01
8.40	0.01	0.00	0.01
8.60	0.06	0.00	0.06
8.80	0.13	0.00	0.13
9.00	0.14	0.00	0.14
9.20	0.15	0.00	0.15
9.40	0.15	0.00	0.15
9.60	0.16	0.00	0.16
9.80	0.17	0.00	0.17
10.00	0.19	0.00	0.19
10.20	0.22	0.00	0.22
10.40	0.24	0.00	0.24
10.60	0.28	0.00	0.28
10.80	0.32	0.00	0.32
11.00	0.37	0.00	0.37
11.20	0.45	0.00	0.45
11.40	0.56	0.00	0.56
11.60	0.82	0.00	0.82
11.80	3.02	0.00	3.02
12.00	**6.65**	0.00	**6.65**
12.20	2.56	0.00	2.56
12.40	1.01	0.00	1.01
12.60	0.64	0.00	0.64
12.80	0.52	0.00	0.52
13.00	0.44	0.00	0.44
13.20	0.38	0.00	0.38
13.40	0.35	0.00	0.35
13.60	0.31	0.00	0.31
13.80	0.28	0.00	0.28
14.00	0.26	0.00	0.26
14.20	0.24	0.00	0.24
14.40	0.23	0.00	0.23
14.60	0.22	0.00	0.22
14.80	0.21	0.00	0.21
15.00	0.20	0.00	0.20
15.20	0.19	0.00	0.19
15.40	0.18	0.00	0.18
15.60	0.18	0.00	0.18
15.80	0.17	0.00	0.17
16.00	0.16	0.00	0.16
16.20	0.15	0.00	0.15
16.40	0.15	0.00	0.15
16.60	0.14	0.00	0.14
16.80	0.14	0.00	0.14
17.00	0.14	0.00	0.14
17.20	0.13	0.00	0.13
17.40	0.13	0.00	0.13
17.60	0.13	0.00	0.13
17.80	0.12	0.00	0.12
18.00	0.12	0.00	0.12
18.20	0.12	0.00	0.12
18.40	0.11	0.00	0.11
18.60	0.11	0.00	0.11
18.80	0.11	0.00	0.11
19.00	0.10	0.00	0.10
19.20	0.10	0.00	0.10
19.40	0.10	0.00	0.10
19.60	0.09	0.00	0.09
19.80	0.09	0.00	0.09
20.00	0.09	0.00	0.09

Summary for Subcatchment 12S: Historic

Runoff = 13.41 cfs @ 11.96 hrs, Volume= 0.615 af, Depth> 5.88"

Runoff by SCS TR-20 method, UH=SCS, Weighted-CN, Time Span= 5.00-20.00 hrs, dt= 0.02 hrs
Type II 24-hr 50 year Rainfall=7.94"

Area (ac)	CN	Description
0.384	98	Paved parking, HSG D
0.870	80	>75% Grass cover, Good, HSG D
1.254	86	Weighted Average
0.870		69.38% Pervious Area
0.384		30.62% Impervious Area

Tc (min)	Length (feet)	Slope (ft/ft)	Velocity (ft/sec)	Capacity (cfs)	Description
5.0					**Direct Entry, Minimum**

Subcatchment 12S: Historic

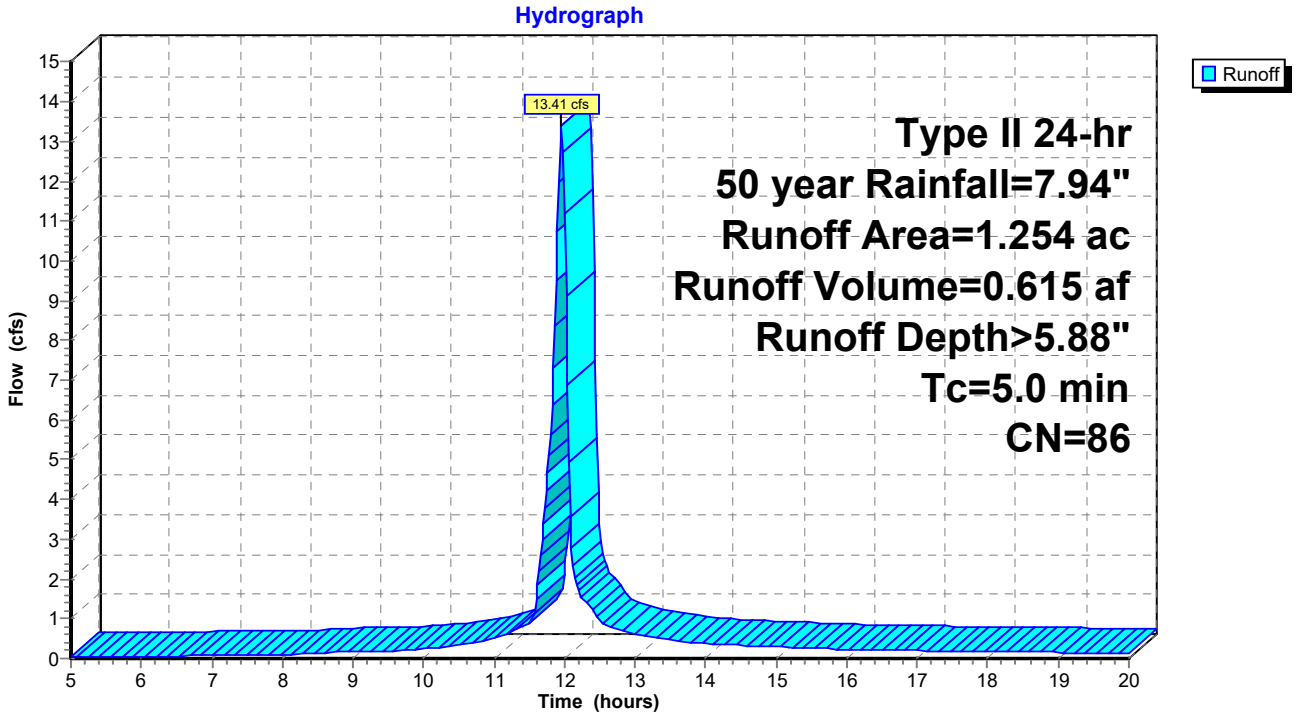

Hydrograph for Subcatchment 12S: Historic

Time (hours)	Precip. (inches)	Excess (inches)	Runoff (cfs)
5.00	0.50	0.02	0.03
5.20	0.53	0.02	0.03
5.40	0.55	0.03	0.04
5.60	0.58	0.03	0.04
5.80	0.61	0.04	0.05
6.00	0.64	0.05	0.05
6.20	0.66	0.06	0.06
6.40	0.69	0.07	0.06
6.60	0.72	0.08	0.07
6.80	0.75	0.09	0.07
7.00	0.79	0.10	0.08
7.20	0.82	0.11	0.08
7.40	0.85	0.13	0.09
7.60	0.88	0.14	0.09
7.80	0.92	0.16	0.10
8.00	0.95	0.17	0.10
8.20	0.99	0.19	0.11
8.40	1.03	0.21	0.13
8.60	1.07	0.23	0.14
8.80	1.12	0.26	0.16
9.00	1.17	0.29	0.18
9.20	1.22	0.32	0.19
9.40	1.27	0.35	0.19
9.60	1.32	0.38	0.20
9.80	1.38	0.41	0.22
10.00	1.44	0.45	0.25
10.20	1.50	0.50	0.28
10.40	1.58	0.55	0.32
10.60	1.66	0.60	0.37
10.80	1.76	0.67	0.43
11.00	1.87	0.75	0.50
11.20	2.00	0.85	0.63
11.40	2.16	0.97	0.80
11.60	2.44	1.19	1.52
11.80	3.42	2.03	**5.66**
12.00	5.26	3.71	**11.20**
12.20	5.55	3.98	1.67
12.40	5.76	4.18	1.21
12.60	5.90	4.32	0.83
12.80	6.02	4.43	0.72
13.00	6.13	4.53	0.62
13.20	6.22	4.62	0.55
13.40	6.31	4.70	0.50
13.60	6.38	4.77	0.45
13.80	6.45	4.84	0.41
14.00	6.51	4.90	0.37
14.20	6.57	4.95	0.35
14.40	6.62	5.00	0.33
14.60	6.68	5.06	0.32
14.80	6.73	5.10	0.31
15.00	6.78	5.15	0.29
15.20	6.82	5.20	0.28
15.40	6.87	5.24	0.27
15.60	6.91	5.28	0.25
15.80	6.95	5.32	0.24
16.00	6.99	5.35	0.23
16.20	7.02	5.39	0.22
16.40	7.06	5.42	0.21
16.60	7.09	5.46	0.21
16.80	7.13	5.49	0.20
17.00	7.16	5.52	0.20
17.20	7.19	5.55	0.20
17.40	7.22	5.58	0.19
17.60	7.25	5.61	0.19
17.80	7.28	5.64	0.18
18.00	7.31	5.67	0.18
18.20	7.34	5.69	0.17
18.40	7.37	5.72	0.17
18.60	7.39	5.75	0.16
18.80	7.42	5.77	0.16
19.00	7.45	5.80	0.15
19.20	7.47	5.82	0.15
19.40	7.49	5.84	0.14
19.60	7.52	5.86	0.14
19.80	7.54	5.88	0.13
20.00	**7.56**	**5.90**	0.13

Summary for Subcatchment 13S: Developed

Runoff = 1.00 cfs @ 11.96 hrs, Volume= 0.050 af, Depth> 7.00"

Runoff by SCS TR-20 method, UH=SCS, Weighted-CN, Time Span= 5.00-20.00 hrs, dt= 0.02 hrs
Type II 24-hr 50 year Rainfall=7.94"

Area (ac)	CN	Description
0.086	98	Paved parking, HSG D
0.086		100.00% Impervious Area

Tc (min)	Length (feet)	Slope (ft/ft)	Velocity (ft/sec)	Capacity (cfs)	Description
5.0					**Direct Entry, Minimum**

Subcatchment 13S: Developed

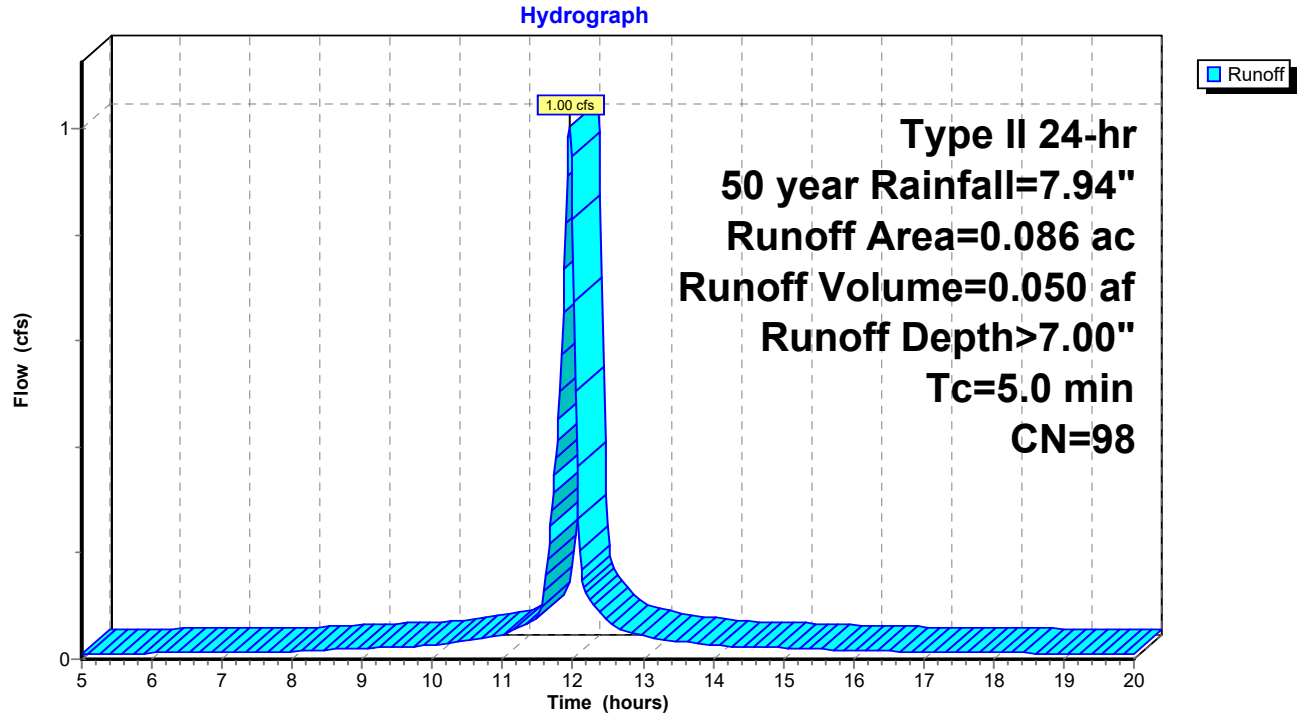

Hydrograph for Subcatchment 13S: Developed

Time (hours)	Precip. (inches)	Excess (inches)	Runoff (cfs)
5.00	0.50	0.32	0.01
5.20	0.53	0.34	0.01
5.40	0.55	0.37	0.01
5.60	0.58	0.39	0.01
5.80	0.61	0.42	0.01
6.00	0.64	0.44	0.01
6.20	0.66	0.47	0.01
6.40	0.69	0.50	0.01
6.60	0.72	0.53	0.01
6.80	0.75	0.56	0.01
7.00	0.79	0.59	0.01
7.20	0.82	0.62	0.01
7.40	0.85	0.65	0.01
7.60	0.88	0.68	0.01
7.80	0.92	0.71	0.01
8.00	0.95	0.75	0.01
8.20	0.99	0.78	0.02
8.40	1.03	0.82	0.02
8.60	1.07	0.86	0.02
8.80	1.12	0.91	0.02
9.00	1.17	0.95	0.02
9.20	1.22	1.00	0.02
9.40	1.27	1.05	0.02
9.60	1.32	1.10	0.02
9.80	1.38	1.16	0.02
10.00	1.44	1.22	0.03
10.20	1.50	1.28	0.03
10.40	1.58	1.36	0.03
10.60	1.66	1.44	0.04
10.80	1.76	1.53	0.04
11.00	1.87	1.64	0.05
11.20	2.00	1.77	0.06
11.40	2.16	1.93	0.07
11.60	2.44	2.21	0.13
11.80	3.42	3.19	**0.45**
12.00	5.26	5.03	**0.83**
12.20	5.55	5.31	0.12
12.40	5.76	5.52	0.09
12.60	5.90	5.66	0.06
12.80	6.02	5.79	0.05
13.00	6.13	5.89	0.04
13.20	6.22	5.98	0.04
13.40	6.31	6.07	0.04
13.60	6.38	6.14	0.03
13.80	6.45	6.21	0.03
14.00	6.51	6.27	0.03
14.20	6.57	6.33	0.02
14.40	6.62	6.39	0.02
14.60	6.68	6.44	0.02
14.80	6.73	6.49	0.02
15.00	6.78	6.54	0.02
15.20	6.82	6.58	0.02
15.40	6.87	6.63	0.02
15.60	6.91	6.67	0.02
15.80	6.95	6.71	0.02
16.00	6.99	6.75	0.02
16.20	7.02	6.78	0.02
16.40	7.06	6.82	0.02
16.60	7.09	6.85	0.01
16.80	7.13	6.89	0.01
17.00	7.16	6.92	0.01
17.20	7.19	6.95	0.01
17.40	7.22	6.98	0.01
17.60	7.25	7.01	0.01
17.80	7.28	7.04	0.01
18.00	7.31	7.07	0.01
18.20	7.34	7.10	0.01
18.40	7.37	7.13	0.01
18.60	7.39	7.16	0.01
18.80	7.42	7.18	0.01
19.00	7.45	7.21	0.01
19.20	7.47	7.23	0.01
19.40	7.49	7.25	0.01
19.60	7.52	7.28	0.01
19.80	7.54	7.30	0.01
20.00	**7.56**	**7.32**	0.01

Summary for Subcatchment 16S: Developed

Runoff = 13.24 cfs @ 11.96 hrs, Volume= 0.634 af, Depth> 6.52"

Runoff by SCS TR-20 method, UH=SCS, Weighted-CN, Time Span= 5.00-20.00 hrs, dt= 0.02 hrs
Type II 24-hr 50 year Rainfall=7.94"

Area (ac)	CN	Description
0.770	98	Paved parking, HSG D
0.398	80	>75% Grass cover, Good, HSG D
1.168	92	Weighted Average
0.398		34.08% Pervious Area
0.770		65.92% Impervious Area

Tc (min)	Length (feet)	Slope (ft/ft)	Velocity (ft/sec)	Capacity (cfs)	Description
5.0					**Direct Entry, Minimum**

Subcatchment 16S: Developed

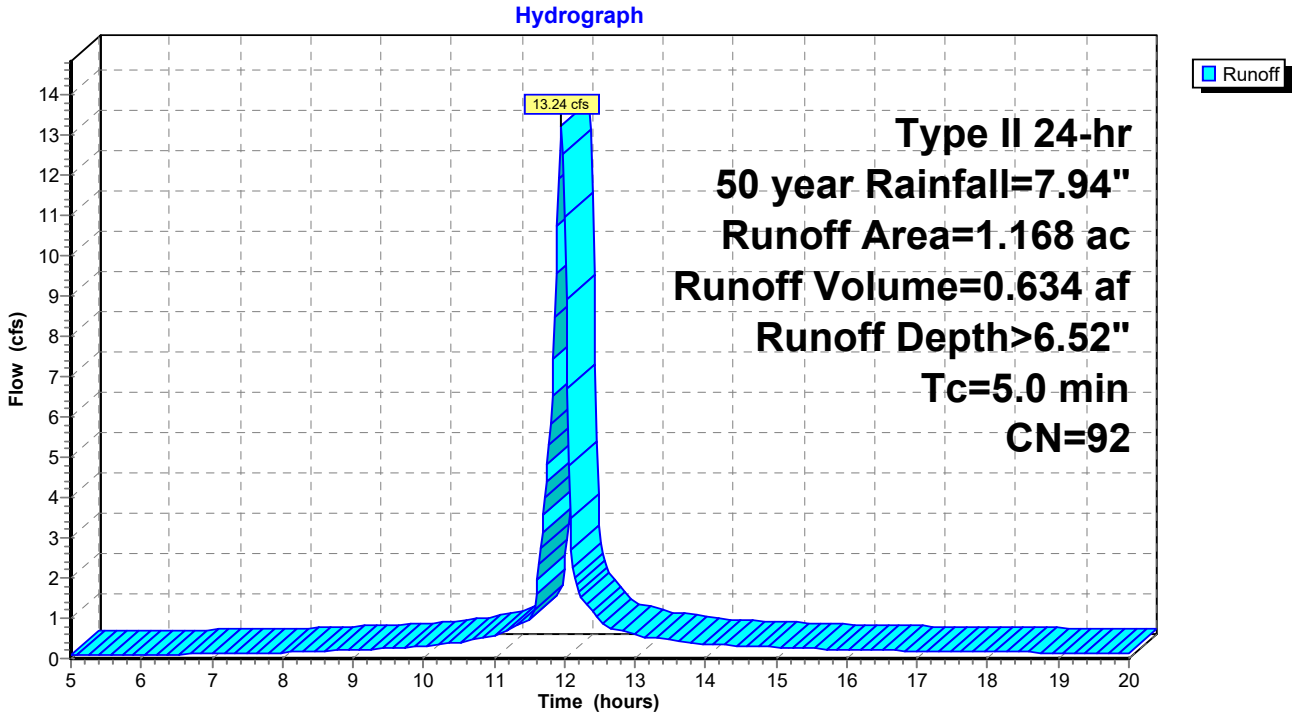

Hydrograph for Subcatchment 16S: Developed

Time (hours)	Precip. (inches)	Excess (inches)	Runoff (cfs)
5.00	0.50	0.09	0.07
5.20	0.53	0.10	0.07
5.40	0.55	0.11	0.08
5.60	0.58	0.13	0.08
5.80	0.61	0.14	0.09
6.00	0.64	0.16	0.09
6.20	0.66	0.18	0.10
6.40	0.69	0.19	0.10
6.60	0.72	0.21	0.11
6.80	0.75	0.23	0.12
7.00	0.79	0.25	0.12
7.20	0.82	0.27	0.13
7.40	0.85	0.30	0.13
7.60	0.88	0.32	0.14
7.80	0.92	0.34	0.14
8.00	0.95	0.37	0.15
8.20	0.99	0.39	0.16
8.40	1.03	0.42	0.17
8.60	1.07	0.46	0.19
8.80	1.12	0.49	0.21
9.00	1.17	0.53	0.23
9.20	1.22	0.57	0.24
9.40	1.27	0.61	0.24
9.60	1.32	0.65	0.25
9.80	1.38	0.70	0.27
10.00	1.44	0.75	0.30
10.20	1.50	0.80	0.34
10.40	1.58	0.87	0.38
10.60	1.66	0.94	0.43
10.80	1.76	1.02	0.50
11.00	1.87	1.12	0.57
11.20	2.00	1.23	0.70
11.40	2.16	1.38	0.87
11.60	2.44	1.63	1.63
11.80	3.42	2.56	**5.82**
12.00	5.26	4.35	**10.98**
12.20	5.55	4.62	1.62
12.40	5.76	4.83	1.17
12.60	5.90	4.97	0.80
12.80	6.02	5.09	0.69
13.00	6.13	5.20	0.60
13.20	6.22	5.29	0.53
13.40	6.31	5.37	0.48
13.60	6.38	5.44	0.43
13.80	6.45	5.51	0.39
14.00	6.51	5.57	0.36
14.20	6.57	5.63	0.33
14.40	6.62	5.68	0.32
14.60	6.68	5.74	0.31
14.80	6.73	5.79	0.29
15.00	6.78	5.83	0.28
15.20	6.82	5.88	0.27
15.40	6.87	5.92	0.26
15.60	6.91	5.97	0.24
15.80	6.95	6.00	0.23
16.00	6.99	6.04	0.22
16.20	7.02	6.08	0.21
16.40	7.06	6.11	0.20
16.60	7.09	6.15	0.20
16.80	7.13	6.18	0.20
17.00	7.16	6.21	0.19
17.20	7.19	6.24	0.19
17.40	7.22	6.28	0.18
17.60	7.25	6.31	0.18
17.80	7.28	6.34	0.17
18.00	7.31	6.36	0.17
18.20	7.34	6.39	0.16
18.40	7.37	6.42	0.16
18.60	7.39	6.44	0.15
18.80	7.42	6.47	0.15
19.00	7.45	6.50	0.15
19.20	7.47	6.52	0.14
19.40	7.49	6.54	0.14
19.60	7.52	6.56	0.13
19.80	7.54	6.59	0.13
20.00	**7.56**	**6.61**	0.12

Summary for Pond 14P: (new Pond)

Inflow Area = 1.168 ac, 65.92% Impervious, Inflow Depth > 6.52" for 50 year event
Inflow = 13.24 cfs @ 11.96 hrs, Volume= 0.634 af
Outflow = 7.92 cfs @ 12.03 hrs, Volume= 0.616 af, Atten= 40%, Lag= 4.4 min
Primary = 7.92 cfs @ 12.03 hrs, Volume= 0.616 af

Routing by Stor-Ind method, Time Span= 5.00-20.00 hrs, dt= 0.02 hrs
Peak Elev= 1,241.92' @ 12.03 hrs Surf.Area= 3,523 sf Storage= 4,911 cf

Plug-Flow detention time= 26.3 min calculated for 0.615 af (97% of inflow)
Center-of-Mass det. time= 14.3 min (753.1 - 738.8)

Volume	Invert	Avail.Storage	Storage Description
#1	1,239.69'	10,748 cf	**Custom Stage Data (Prismatic)** Listed below (Recalc)

Elevation (feet)	Surf.Area (sq-ft)	Inc.Store (cubic-feet)	Cum.Store (cubic-feet)
1,239.69	0	0	0
1,240.00	1,432	222	222
1,241.00	2,461	1,947	2,168
1,242.00	3,619	3,040	5,208
1,243.25	5,244	5,539	10,748

Device	Routing	Invert	Outlet Devices
#1	Primary	1,239.69'	**18.0" Round Culvert** L= 26.0' RCP, square edge headwall, Ke= 0.500 Inlet / Outlet Invert= 1,239.69' / 1,239.47' S= 0.0085 '/' Cc= 0.900 n= 0.013, Flow Area= 1.77 sf
#2	Device 1	1,239.69'	**15.5" Vert. Orifice/Grate** C= 0.600

Primary OutFlow Max=7.91 cfs @ 12.03 hrs HW=1,241.91' TW=1,240.34' (Fixed TW Elev= 1,240.34')
↑**1=Culvert** (Passes 7.91 cfs of 9.79 cfs potential flow)
↑**2=Orifice/Grate** (Orifice Controls 7.91 cfs @ 6.04 fps)

Pond 14P: (new Pond)

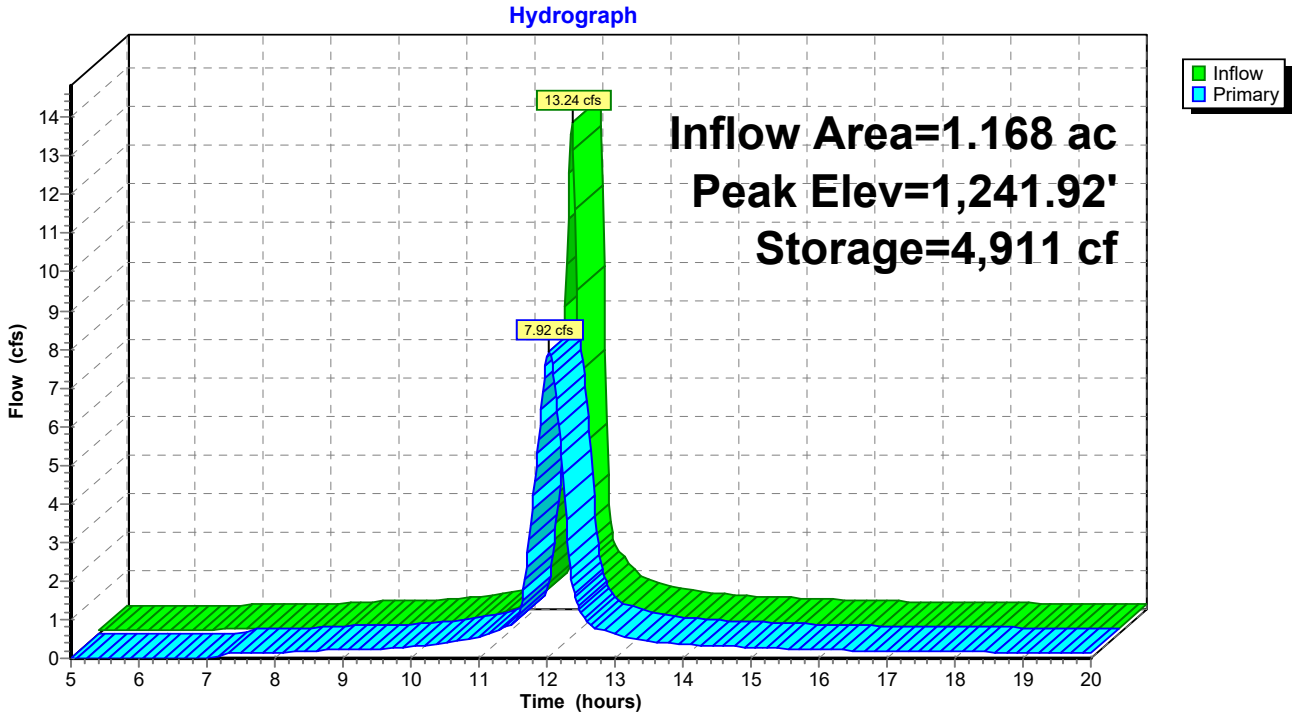

Pond 14P: (new Pond)

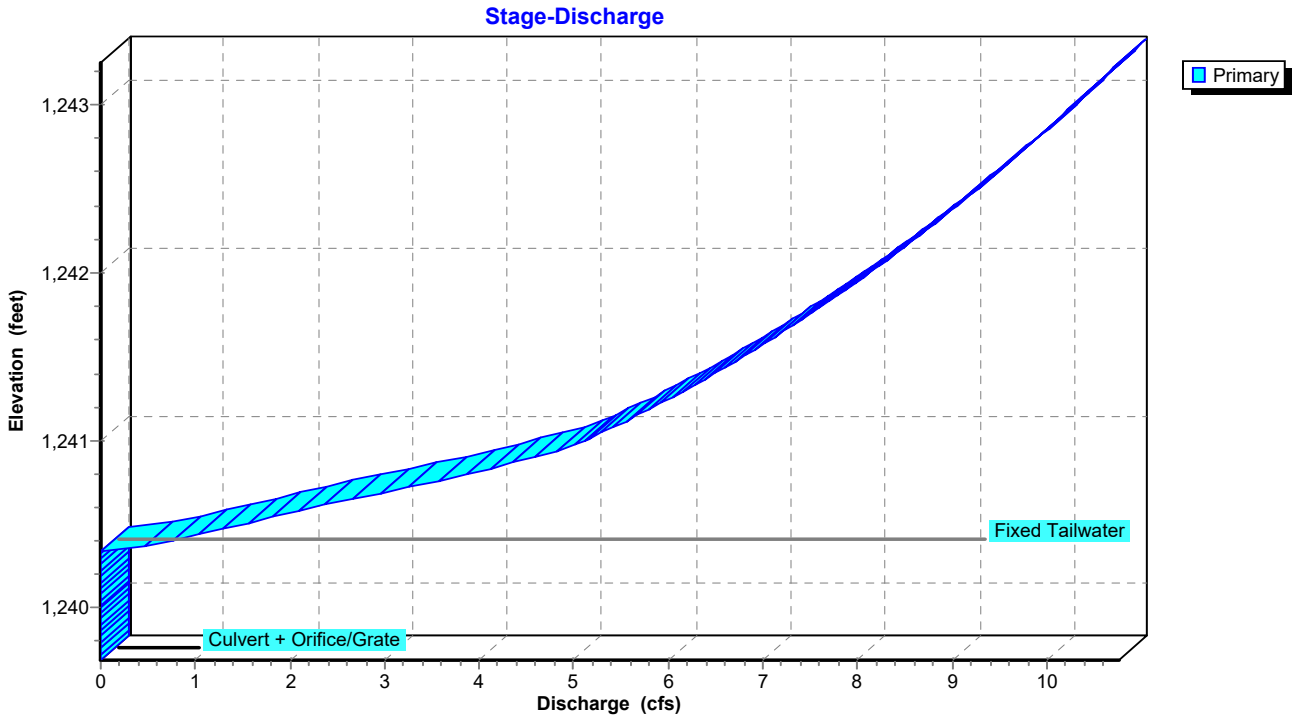

Pond 14P: (new Pond)

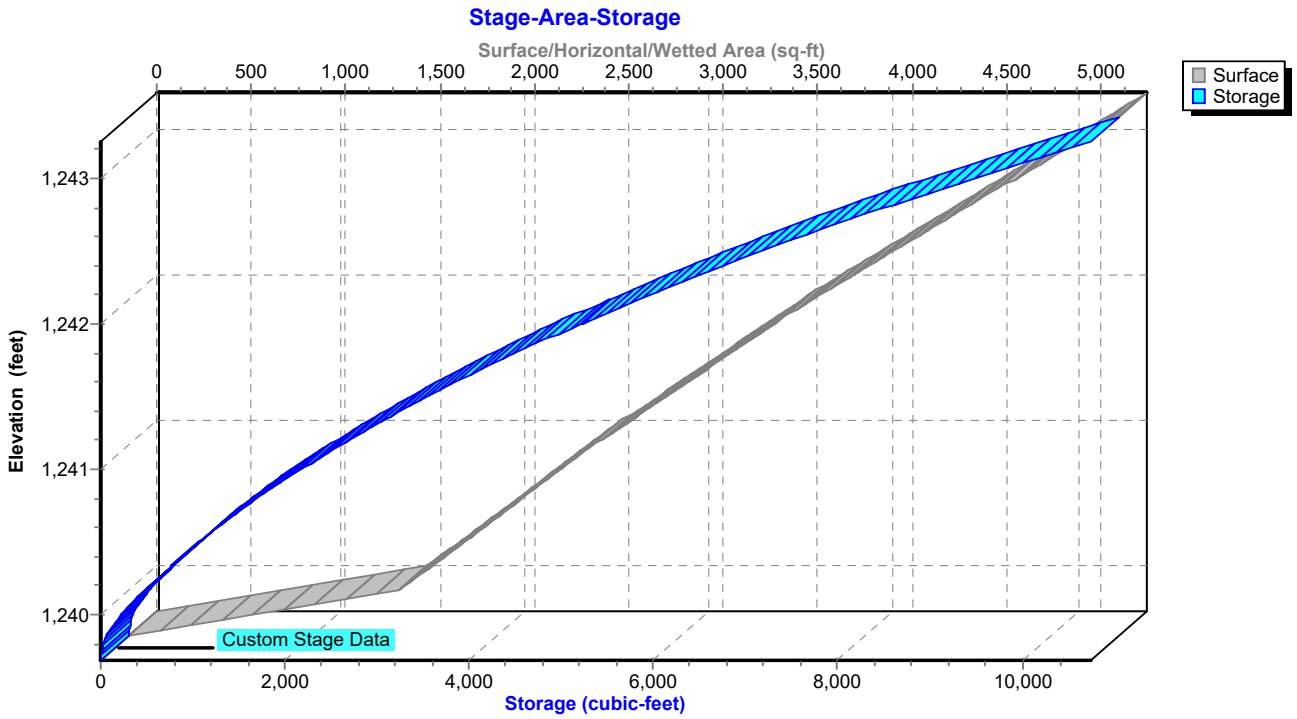

Hydrograph for Pond 14P: (new Pond)

Time (hours)	Inflow (cfs)	Storage (cubic-feet)	Elevation (feet)	Primary (cfs)
5.00	0.07	2	1,239.72	0.00
5.40	0.08	109	1,239.91	0.00
5.80	0.09	230	1,240.01	0.00
6.20	0.10	366	1,240.10	0.00
6.60	0.11	517	1,240.19	0.00
7.00	0.12	683	1,240.29	0.00
7.40	0.13	782	1,240.35	0.13
7.80	0.14	783	1,240.35	0.14
8.20	0.16	784	1,240.35	0.16
8.60	0.19	788	1,240.35	0.19
9.00	0.23	791	1,240.35	0.22
9.40	0.24	793	1,240.35	0.24
9.80	0.27	796	1,240.36	0.27
10.20	0.34	802	1,240.36	0.33
10.60	0.43	811	1,240.36	0.42
11.00	0.57	834	1,240.38	0.55
11.40	0.87	892	1,240.41	0.81
11.80	**5.82**	**1,788**	**1,240.84**	**4.19**
12.20	**1.62**	**2,524**	**1,241.14**	**5.64**
12.60	0.80	922	1,240.42	0.94
13.00	0.60	851	1,240.39	0.63
13.40	0.48	822	1,240.37	0.49
13.80	0.39	809	1,240.36	0.40
14.20	0.33	803	1,240.36	0.34
14.60	0.31	800	1,240.36	0.31
15.00	0.28	797	1,240.36	0.28
15.40	0.26	795	1,240.35	0.26
15.80	0.23	792	1,240.35	0.23
16.20	0.21	790	1,240.35	0.21
16.60	0.20	789	1,240.35	0.20
17.00	0.19	788	1,240.35	0.19
17.40	0.18	787	1,240.35	0.18
17.80	0.17	786	1,240.35	0.17
18.20	0.16	785	1,240.35	0.16
18.60	0.15	784	1,240.35	0.15
19.00	0.15	783	1,240.35	0.15
19.40	0.14	782	1,240.35	0.14
19.80	0.13	781	1,240.35	0.13

Stage-Discharge for Pond 14P: (new Pond)

Elevation (feet)	Primary (cfs)	Elevation (feet)	Primary (cfs)	Elevation (feet)	Primary (cfs)	Elevation (feet)	Primary (cfs)
1,239.69	0.00	1,240.73	3.32	1,241.77	7.54	1,242.81	9.92
1,239.71	0.00	1,240.75	3.50	1,241.79	7.60	1,242.83	9.96
1,239.73	0.00	1,240.77	3.67	1,241.81	7.65	1,242.85	10.00
1,239.75	0.00	1,240.79	3.84	1,241.83	7.70	1,242.87	10.04
1,239.77	0.00	1,240.81	3.98	1,241.85	7.75	1,242.89	10.08
1,239.79	0.00	1,240.83	4.13	1,241.87	7.80	1,242.91	10.11
1,239.81	0.00	1,240.85	4.26	1,241.89	7.86	1,242.93	10.15
1,239.83	0.00	1,240.87	4.40	1,241.91	7.91	1,242.95	10.19
1,239.85	0.00	1,240.89	4.53	1,241.93	7.96	1,242.97	10.23
1,239.87	0.00	1,240.91	4.66	1,241.95	8.01	1,242.99	10.27
1,239.89	0.00	1,240.93	4.78	1,241.97	8.06	1,243.01	10.31
1,239.91	0.00	1,240.95	4.90	1,241.99	8.10	1,243.03	10.35
1,239.93	0.00	1,240.97	5.00	1,242.01	8.15	1,243.05	10.39
1,239.95	0.00	1,240.99	5.09	1,242.03	8.20	1,243.07	10.42
1,239.97	0.00	1,241.01	5.16	1,242.05	8.25	1,243.09	10.46
1,239.99	0.00	1,241.03	5.24	1,242.07	8.30	1,243.11	10.50
1,240.01	0.00	1,241.05	5.32	1,242.09	8.35	1,243.13	10.54
1,240.03	0.00	1,241.07	5.39	1,242.11	8.39	1,243.15	10.58
1,240.05	0.00	1,241.09	5.46	1,242.13	8.44	1,243.17	10.61
1,240.07	0.00	1,241.11	5.54	1,242.15	8.49	1,243.19	10.65
1,240.09	0.00	1,241.13	5.61	1,242.17	8.54	1,243.21	10.69
1,240.11	0.00	1,241.15	5.68	1,242.19	8.58	1,243.23	10.73
1,240.13	0.00	1,241.17	5.75	1,242.21	8.63	1,243.25	**10.76**
1,240.15	0.00	1,241.19	5.82	1,242.23	8.67		
1,240.17	0.00	1,241.21	5.88	1,242.25	8.72		
1,240.19	0.00	1,241.23	5.95	1,242.27	8.77		
1,240.21	0.00	1,241.25	6.02	1,242.29	8.81		
1,240.23	0.00	1,241.27	6.08	1,242.31	8.86		
1,240.25	0.00	1,241.29	6.15	1,242.33	8.90		
1,240.27	0.00	1,241.31	6.21	1,242.35	8.95		
1,240.29	0.00	1,241.33	6.28	1,242.37	8.99		
1,240.31	0.00	1,241.35	6.34	1,242.39	9.03		
1,240.33	0.00	1,241.37	6.40	1,242.41	9.08		
1,240.35	0.27	1,241.39	6.47	1,242.43	9.12		
1,240.37	0.50	1,241.41	6.53	1,242.45	9.16		
1,240.39	0.67	1,241.43	6.59	1,242.47	9.21		
1,240.41	0.83	1,241.45	6.65	1,242.49	9.25		
1,240.43	0.98	1,241.47	6.71	1,242.51	9.29		
1,240.45	1.13	1,241.49	6.77	1,242.53	9.34		
1,240.47	1.27	1,241.51	6.82	1,242.55	9.38		
1,240.49	1.42	1,241.53	6.88	1,242.57	9.42		
1,240.51	1.57	1,241.55	6.94	1,242.59	9.46		
1,240.53	1.72	1,241.57	7.00	1,242.61	9.51		
1,240.55	1.87	1,241.59	7.05	1,242.63	9.55		
1,240.57	2.02	1,241.61	7.11	1,242.65	9.59		
1,240.59	2.18	1,241.63	7.17	1,242.67	9.63		
1,240.61	2.33	1,241.65	7.22	1,242.69	9.67		
1,240.63	2.49	1,241.67	7.28	1,242.71	9.71		
1,240.65	2.65	1,241.69	7.33	1,242.73	9.75		
1,240.67	2.82	1,241.71	7.38	1,242.75	9.79		
1,240.69	2.98	1,241.73	7.44	1,242.77	9.84		
1,240.71	3.15	1,241.75	7.49	1,242.79	9.88		

Stage-Area-Storage for Pond 14P: (new Pond)

Elevation (feet)	Surface (sq-ft)	Storage (cubic-feet)
1,239.69	0	0
1,239.74	231	6
1,239.79	462	23
1,239.84	693	52
1,239.89	924	92
1,239.94	1,155	144
1,239.99	1,386	208
1,240.04	1,473	280
1,240.09	1,525	355
1,240.14	1,576	433
1,240.19	1,628	513
1,240.24	1,679	595
1,240.29	1,730	681
1,240.34	1,782	768
1,240.39	1,833	859
1,240.44	1,885	952
1,240.49	1,936	1,047
1,240.54	1,988	1,145
1,240.59	2,039	1,246
1,240.64	2,091	1,349
1,240.69	2,142	1,455
1,240.74	2,193	1,563
1,240.79	2,245	1,674
1,240.84	2,296	1,788
1,240.89	2,348	1,904
1,240.94	2,399	2,023
1,240.99	2,451	2,144
1,241.04	2,507	2,268
1,241.09	2,565	2,395
1,241.14	2,623	2,524
1,241.19	2,681	2,657
1,241.24	2,739	2,792
1,241.29	2,797	2,931
1,241.34	2,855	3,072
1,241.39	2,913	3,216
1,241.44	2,971	3,363
1,241.49	3,028	3,513
1,241.54	3,086	3,666
1,241.59	3,144	3,822
1,241.64	3,202	3,981
1,241.69	3,260	4,142
1,241.74	3,318	4,307
1,241.79	3,376	4,474
1,241.84	3,434	4,644
1,241.89	3,492	4,817
1,241.94	3,550	4,993
1,241.99	3,607	5,172
1,242.04	3,671	5,354
1,242.09	3,736	5,539
1,242.14	3,801	5,728
1,242.19	3,866	5,920
1,242.24	3,931	6,114
1,242.29	3,996	6,313
1,242.34	4,061	6,514
1,242.39	4,126	6,719
1,242.44	4,191	6,927
1,242.49	4,256	7,138
1,242.54	4,321	7,352
1,242.59	4,386	7,570
1,242.64	4,451	7,791
1,242.69	4,516	8,015
1,242.74	4,581	8,242
1,242.79	4,646	8,473
1,242.84	4,711	8,707
1,242.89	4,776	8,944
1,242.94	4,841	9,185
1,242.99	4,906	9,428
1,243.04	4,971	9,675
1,243.09	5,036	9,925
1,243.14	5,101	10,179
1,243.19	5,166	10,436
1,243.24	**5,231**	**10,695**

Summary for Link 15L: (new Link)

Inflow Area = 1.254 ac, 68.26% Impervious, Inflow Depth > 6.38" for 50 year event
Inflow = 8.63 cfs @ 12.00 hrs, Volume= 0.667 af
Primary = 8.63 cfs @ 12.00 hrs, Volume= 0.667 af, Atten= 0%, Lag= 0.0 min

Primary outflow = Inflow, Time Span= 5.00-20.00 hrs, dt= 0.02 hrs

Link 15L: (new Link)

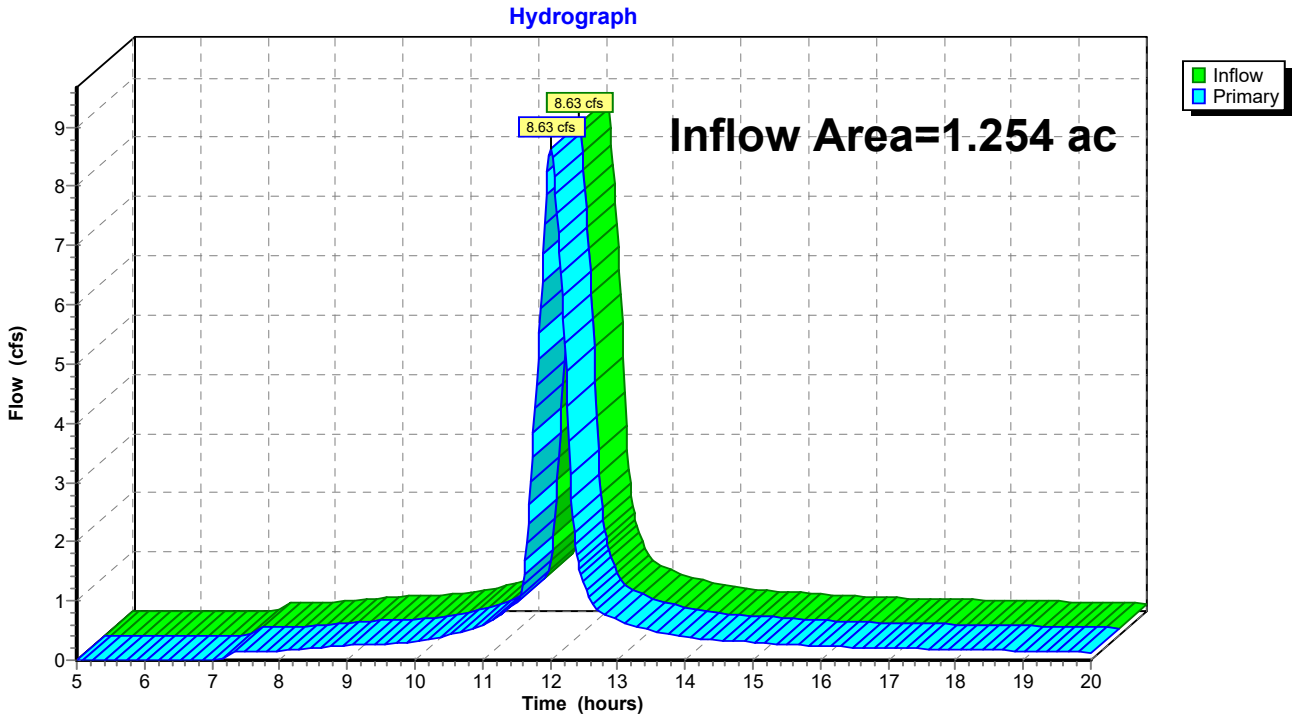

Hydrograph for Link 15L: (new Link)

Time (hours)	Inflow (cfs)	Elevation (feet)	Primary (cfs)
5.00	0.01	**0.00**	0.01
5.20	0.01	0.00	0.01
5.40	0.01	0.00	0.01
5.60	0.01	0.00	0.01
5.80	0.01	0.00	0.01
6.00	0.01	0.00	0.01
6.20	0.01	0.00	0.01
6.40	0.01	0.00	0.01
6.60	0.01	0.00	0.01
6.80	0.01	0.00	0.01
7.00	0.01	0.00	0.01
7.20	0.04	0.00	0.04
7.40	0.14	0.00	0.14
7.60	0.15	0.00	0.15
7.80	0.15	0.00	0.15
8.00	0.16	0.00	0.16
8.20	0.17	0.00	0.17
8.40	0.19	0.00	0.19
8.60	0.21	0.00	0.21
8.80	0.23	0.00	0.23
9.00	0.25	0.00	0.25
9.20	0.26	0.00	0.26
9.40	0.26	0.00	0.26
9.60	0.27	0.00	0.27
9.80	0.29	0.00	0.29
10.00	0.32	0.00	0.32
10.20	0.36	0.00	0.36
10.40	0.41	0.00	0.41
10.60	0.45	0.00	0.45
10.80	0.52	0.00	0.52
11.00	0.59	0.00	0.59
11.20	0.71	0.00	0.71
11.40	0.88	0.00	0.88
11.60	1.27	0.00	1.27
11.80	4.65	0.00	4.65
12.00	**8.63**	0.00	**8.63**
12.20	5.76	0.00	5.76
12.40	1.78	0.00	1.78
12.60	1.00	0.00	1.00
12.80	0.78	0.00	0.78
13.00	0.67	0.00	0.67
13.20	0.59	0.00	0.59
13.40	0.53	0.00	0.53
13.60	0.47	0.00	0.47
13.80	0.43	0.00	0.43
14.00	0.39	0.00	0.39
14.20	0.36	0.00	0.36
14.40	0.35	0.00	0.35
14.60	0.33	0.00	0.33
14.80	0.32	0.00	0.32
15.00	0.30	0.00	0.30
15.20	0.29	0.00	0.29
15.40	0.28	0.00	0.28
15.60	0.26	0.00	0.26
15.80	0.25	0.00	0.25
16.00	0.24	0.00	0.24
16.20	0.23	0.00	0.23
16.40	0.22	0.00	0.22
16.60	0.22	0.00	0.22
16.80	0.21	0.00	0.21
17.00	0.21	0.00	0.21
17.20	0.20	0.00	0.20
17.40	0.20	0.00	0.20
17.60	0.19	0.00	0.19
17.80	0.19	0.00	0.19
18.00	0.18	0.00	0.18
18.20	0.18	0.00	0.18
18.40	0.17	0.00	0.17
18.60	0.17	0.00	0.17
18.80	0.16	0.00	0.16
19.00	0.16	0.00	0.16
19.20	0.15	0.00	0.15
19.40	0.15	0.00	0.15
19.60	0.14	0.00	0.14
19.80	0.14	0.00	0.14
20.00	0.13	0.00	0.13

Summary for Subcatchment 12S: Historic

Runoff = 15.93 cfs @ 11.96 hrs, Volume= 0.739 af, Depth> 7.07"

Runoff by SCS TR-20 method, UH=SCS, Weighted-CN, Time Span= 5.00-20.00 hrs, dt= 0.02 hrs
Type II 24-hr 100 year Rainfall=9.25"

Area (ac)	CN	Description
0.384	98	Paved parking, HSG D
0.870	80	>75% Grass cover, Good, HSG D
1.254	86	Weighted Average
0.870		69.38% Pervious Area
0.384		30.62% Impervious Area

Tc (min)	Length (feet)	Slope (ft/ft)	Velocity (ft/sec)	Capacity (cfs)	Description
5.0					**Direct Entry, Minimum**

Subcatchment 12S: Historic

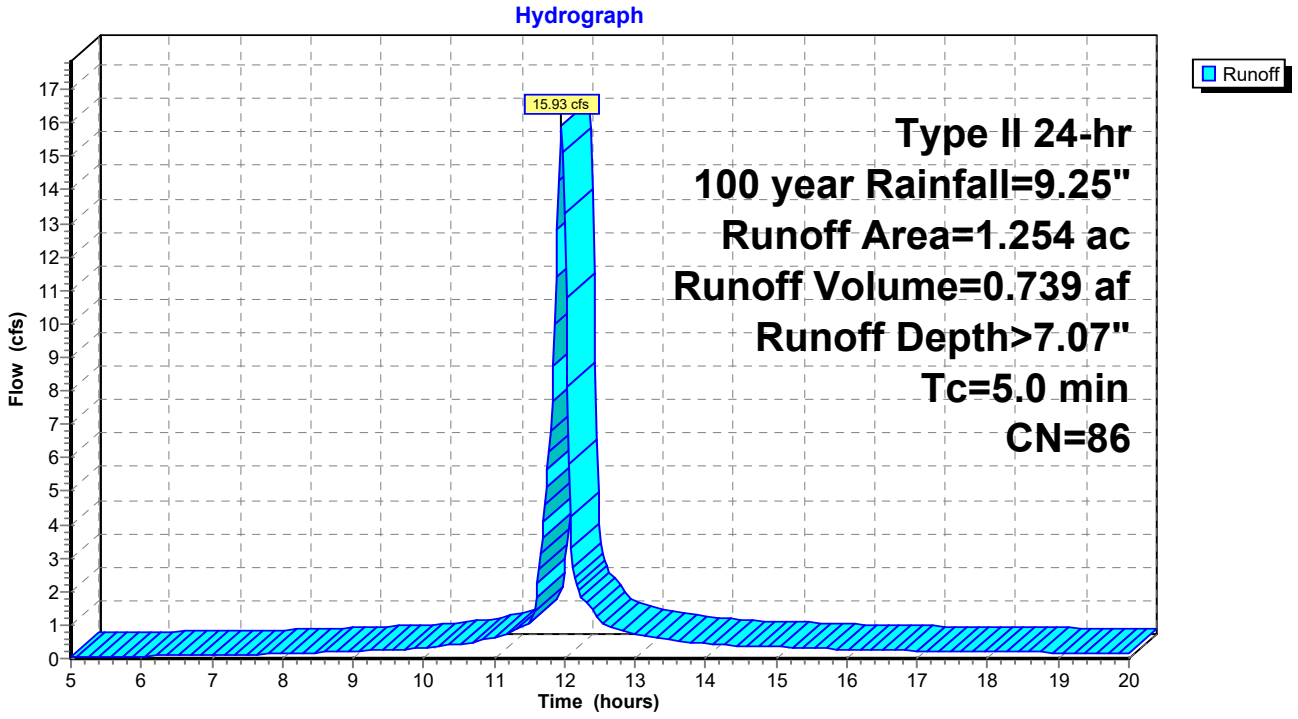

Hydrograph for Subcatchment 12S: Historic

Time (hours)	Precip. (inches)	Excess (inches)	Runoff (cfs)
5.00	0.58	0.04	0.05
5.20	0.61	0.04	0.05
5.40	0.64	0.05	0.06
5.60	0.67	0.06	0.06
5.80	0.71	0.07	0.07
6.00	0.74	0.08	0.07
6.20	0.77	0.10	0.08
6.40	0.81	0.11	0.09
6.60	0.84	0.12	0.09
6.80	0.88	0.14	0.10
7.00	0.92	0.16	0.11
7.20	0.95	0.17	0.11
7.40	0.99	0.19	0.12
7.60	1.03	0.21	0.12
7.80	1.07	0.23	0.13
8.00	1.11	0.26	0.14
8.20	1.15	0.28	0.15
8.40	1.20	0.30	0.17
8.60	1.25	0.33	0.19
8.80	1.30	0.37	0.21
9.00	1.36	0.40	0.23
9.20	1.42	0.44	0.24
9.40	1.48	0.48	0.24
9.60	1.54	0.52	0.25
9.80	1.60	0.56	0.28
10.00	1.67	0.61	0.32
10.20	1.75	0.67	0.36
10.40	1.84	0.73	0.41
10.60	1.94	0.80	0.46
10.80	2.05	0.89	0.54
11.00	2.17	0.98	0.62
11.20	2.32	1.10	0.78
11.40	2.51	1.25	0.98
11.60	2.84	1.52	1.85
11.80	3.98	2.53	**6.81**
12.00	6.13	4.54	**13.27**
12.20	6.46	4.85	1.97
12.40	6.71	5.09	1.43
12.60	6.88	5.25	0.98
12.80	7.02	5.38	0.85
13.00	7.14	5.50	0.73
13.20	7.25	5.61	0.65
13.40	7.35	5.70	0.59
13.60	7.43	5.78	0.53
13.80	7.51	5.86	0.48
14.00	7.58	5.93	0.44
14.20	7.65	5.99	0.41
14.40	7.72	6.06	0.39
14.60	7.78	6.12	0.38
14.80	7.84	6.17	0.36
15.00	7.89	6.23	0.35
15.20	7.95	6.28	0.33
15.40	8.00	6.33	0.31
15.60	8.05	6.38	0.30
15.80	8.10	6.42	0.28
16.00	8.14	6.47	0.27
16.20	8.18	6.51	0.26
16.40	8.22	6.55	0.25
16.60	8.26	6.59	0.25
16.80	8.30	6.63	0.24
17.00	8.34	6.66	0.24
17.20	8.38	6.70	0.23
17.40	8.42	6.73	0.22
17.60	8.45	6.77	0.22
17.80	8.49	6.80	0.21
18.00	8.52	6.84	0.21
18.20	8.55	6.87	0.20
18.40	8.58	6.90	0.20
18.60	8.61	6.93	0.19
18.80	8.65	6.96	0.18
19.00	8.67	6.99	0.18
19.20	8.70	7.01	0.17
19.40	8.73	7.04	0.17
19.60	8.76	7.07	0.16
19.80	8.78	7.09	0.16
20.00	**8.81**	**7.11**	0.15

Summary for Subcatchment 13S: Developed

Runoff = 1.17 cfs @ 11.96 hrs, Volume= 0.059 af, Depth> 8.18"

Runoff by SCS TR-20 method, UH=SCS, Weighted-CN, Time Span= 5.00-20.00 hrs, dt= 0.02 hrs
Type II 24-hr 100 year Rainfall=9.25"

Area (ac)	CN	Description
0.086	98	Paved parking, HSG D
0.086		100.00% Impervious Area

Tc (min)	Length (feet)	Slope (ft/ft)	Velocity (ft/sec)	Capacity (cfs)	Description
5.0					**Direct Entry, Minimum**

Subcatchment 13S: Developed

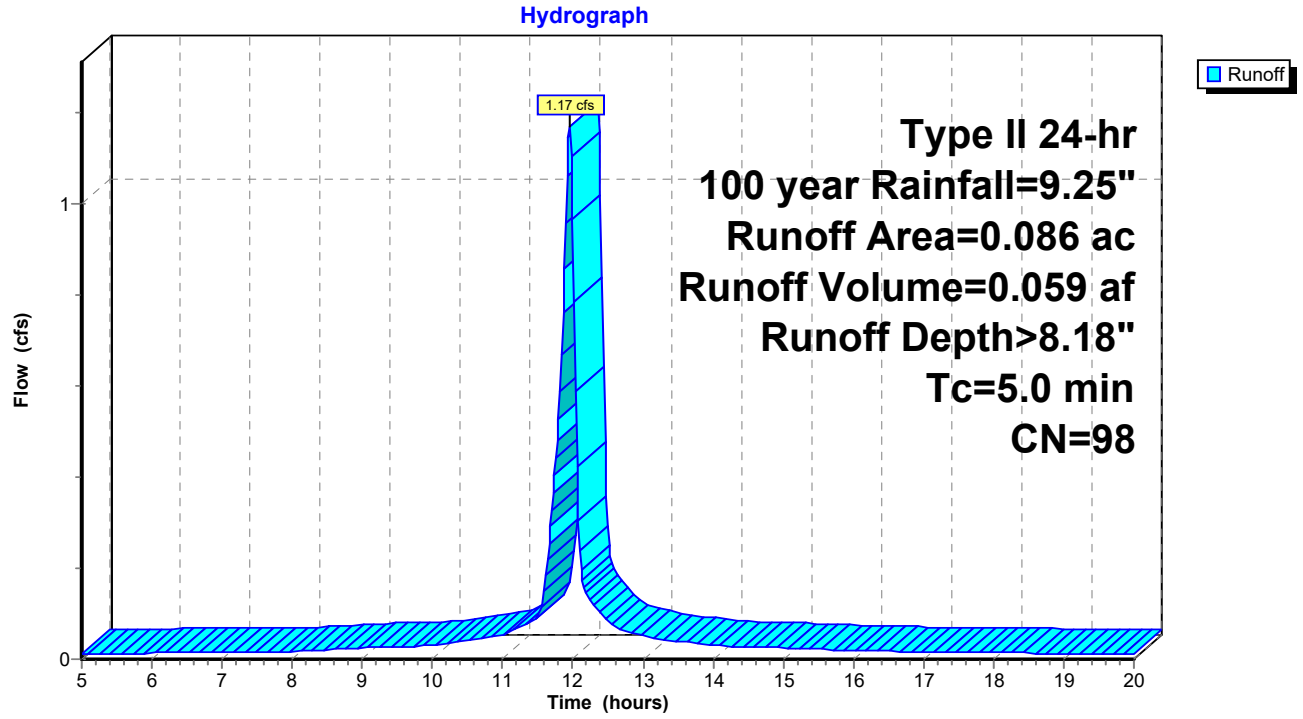

Hydrograph for Subcatchment 13S: Developed

Time (hours)	Precip. (inches)	Excess (inches)	Runoff (cfs)
5.00	0.58	0.39	0.01
5.20	0.61	0.42	0.01
5.40	0.64	0.45	0.01
5.60	0.67	0.48	0.01
5.80	0.71	0.51	0.01
6.00	0.74	0.54	0.01
6.20	0.77	0.57	0.01
6.40	0.81	0.61	0.01
6.60	0.84	0.64	0.01
6.80	0.88	0.67	0.01
7.00	0.92	0.71	0.02
7.20	0.95	0.75	0.02
7.40	0.99	0.78	0.02
7.60	1.03	0.82	0.02
7.80	1.07	0.86	0.02
8.00	1.11	0.90	0.02
8.20	1.15	0.94	0.02
8.40	1.20	0.98	0.02
8.60	1.25	1.03	0.02
8.80	1.30	1.09	0.02
9.00	1.36	1.14	0.02
9.20	1.42	1.20	0.03
9.40	1.48	1.26	0.03
9.60	1.54	1.32	0.03
9.80	1.60	1.38	0.03
10.00	1.67	1.45	0.03
10.20	1.75	1.53	0.03
10.40	1.84	1.62	0.04
10.60	1.94	1.71	0.04
10.80	2.05	1.82	0.05
11.00	2.17	1.95	0.05
11.20	2.32	2.10	0.07
11.40	2.51	2.28	0.08
11.60	2.84	2.61	0.15
11.80	3.98	3.75	**0.53**
12.00	6.13	5.89	**0.97**
12.20	6.46	6.22	0.14
12.40	6.71	6.47	0.10
12.60	6.88	6.64	0.07
12.80	7.02	6.78	0.06
13.00	7.14	6.90	0.05
13.20	7.25	7.01	0.05
13.40	7.35	7.11	0.04
13.60	7.43	7.19	0.04
13.80	7.51	7.27	0.03
14.00	7.58	7.35	0.03
14.20	7.65	7.41	0.03
14.40	7.72	7.48	0.03
14.60	7.78	7.54	0.03
14.80	7.84	7.60	0.03
15.00	7.89	7.66	0.02
15.20	7.95	7.71	0.02
15.40	8.00	7.76	0.02
15.60	8.05	7.81	0.02
15.80	8.10	7.86	0.02
16.00	8.14	7.90	0.02
16.20	8.18	7.94	0.02
16.40	8.22	7.98	0.02
16.60	8.26	8.02	0.02
16.80	8.30	8.06	0.02
17.00	8.34	8.10	0.02
17.20	8.38	8.14	0.02
17.40	8.42	8.18	0.02
17.60	8.45	8.21	0.02
17.80	8.49	8.25	0.01
18.00	8.52	8.28	0.01
18.20	8.55	8.31	0.01
18.40	8.58	8.34	0.01
18.60	8.61	8.37	0.01
18.80	8.65	8.40	0.01
19.00	8.67	8.43	0.01
19.20	8.70	8.46	0.01
19.40	8.73	8.49	0.01
19.60	8.76	8.52	0.01
19.80	8.78	8.54	0.01
20.00	**8.81**	**8.57**	0.01

Summary for Subcatchment 16S: Developed

Runoff = 15.54 cfs @ 11.96 hrs, Volume= 0.750 af, Depth> 7.71"

Runoff by SCS TR-20 method, UH=SCS, Weighted-CN, Time Span= 5.00-20.00 hrs, dt= 0.02 hrs
Type II 24-hr 100 year Rainfall=9.25"

Area (ac)	CN	Description
0.770	98	Paved parking, HSG D
0.398	80	>75% Grass cover, Good, HSG D
1.168	92	Weighted Average
0.398		34.08% Pervious Area
0.770		65.92% Impervious Area

Tc (min)	Length (feet)	Slope (ft/ft)	Velocity (ft/sec)	Capacity (cfs)	Description
5.0					**Direct Entry, Minimum**

Subcatchment 16S: Developed

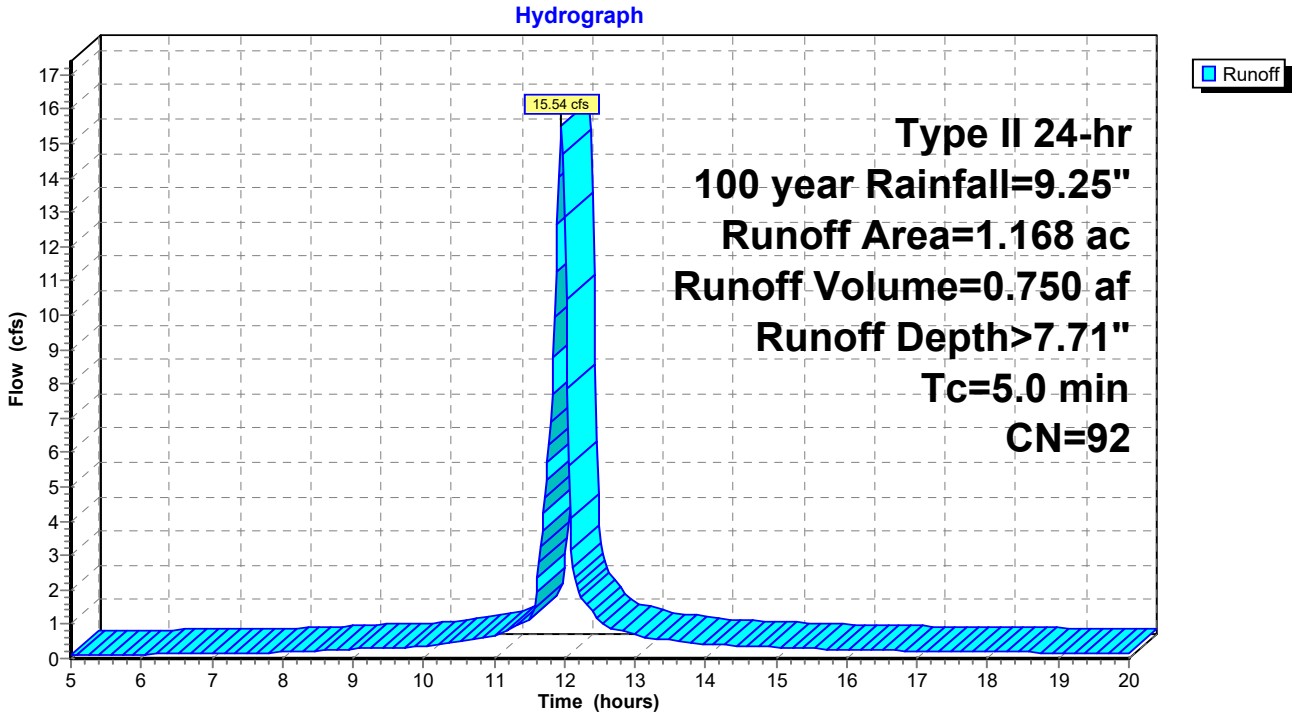

Hydrograph for Subcatchment 16S: Developed

Time (hours)	Precip. (inches)	Excess (inches)	Runoff (cfs)
5.00	0.58	0.13	0.09
5.20	0.61	0.15	0.10
5.40	0.64	0.16	0.10
5.60	0.67	0.18	0.11
5.80	0.71	0.20	0.12
6.00	0.74	0.22	0.12
6.20	0.77	0.24	0.13
6.40	0.81	0.27	0.13
6.60	0.84	0.29	0.14
6.80	0.88	0.32	0.15
7.00	0.92	0.34	0.15
7.20	0.95	0.37	0.16
7.40	0.99	0.40	0.16
7.60	1.03	0.42	0.17
7.80	1.07	0.45	0.18
8.00	1.11	0.49	0.18
8.20	1.15	0.52	0.20
8.40	1.20	0.55	0.22
8.60	1.25	0.59	0.24
8.80	1.30	0.64	0.26
9.00	1.36	0.68	0.28
9.20	1.42	0.73	0.29
9.40	1.48	0.78	0.29
9.60	1.54	0.83	0.30
9.80	1.60	0.89	0.33
10.00	1.67	0.95	0.36
10.20	1.75	1.02	0.41
10.40	1.84	1.09	0.46
10.60	1.94	1.18	0.51
10.80	2.05	1.28	0.59
11.00	2.17	1.39	0.68
11.20	2.32	1.53	0.83
11.40	2.51	1.70	1.04
11.60	2.84	2.01	1.93
11.80	3.98	3.10	**6.87**
12.00	6.13	5.20	**12.87**
12.20	6.46	5.52	1.90
12.40	6.71	5.77	1.37
12.60	6.88	5.93	0.94
12.80	7.02	6.07	0.81
13.00	7.14	6.19	0.70
13.20	7.25	6.30	0.62
13.40	7.35	6.40	0.56
13.60	7.43	6.48	0.50
13.80	7.51	6.56	0.46
14.00	7.58	6.63	0.42
14.20	7.65	6.70	0.39
14.40	7.72	6.76	0.37
14.60	7.78	6.82	0.36
14.80	7.84	6.88	0.34
15.00	7.89	6.94	0.33
15.20	7.95	6.99	0.31
15.40	8.00	7.04	0.30
15.60	8.05	7.09	0.28
15.80	8.10	7.14	0.27
16.00	8.14	7.18	0.25
16.20	8.18	7.22	0.24
16.40	8.22	7.26	0.24
16.60	8.26	7.30	0.23
16.80	8.30	7.34	0.23
17.00	8.34	7.38	0.22
17.20	8.38	7.42	0.22
17.40	8.42	7.45	0.21
17.60	8.45	7.49	0.21
17.80	8.49	7.52	0.20
18.00	8.52	7.56	0.20
18.20	8.55	7.59	0.19
18.40	8.58	7.62	0.19
18.60	8.61	7.65	0.18
18.80	8.65	7.68	0.17
19.00	8.67	7.71	0.17
19.20	8.70	7.74	0.16
19.40	8.73	7.77	0.16
19.60	8.76	7.79	0.15
19.80	8.78	7.82	0.15
20.00	**8.81**	**7.84**	0.14

Summary for Pond 14P: (new Pond)

Inflow Area = 1.168 ac, 65.92% Impervious, Inflow Depth > 7.71" for 100 year event
Inflow = 15.54 cfs @ 11.96 hrs, Volume= 0.750 af
Outflow = 8.68 cfs @ 12.03 hrs, Volume= 0.732 af, Atten= 44%, Lag= 4.7 min
Primary = 8.68 cfs @ 12.03 hrs, Volume= 0.732 af

Routing by Stor-Ind method, Time Span= 5.00-20.00 hrs, dt= 0.02 hrs
Peak Elev= 1,242.23' @ 12.03 hrs Surf.Area= 3,920 sf Storage= 6,081 cf

Plug-Flow detention time= 23.8 min calculated for 0.731 af (97% of inflow)
Center-of-Mass det. time= 13.4 min (750.1 - 736.7)

Volume	Invert	Avail.Storage	Storage Description
#1	1,239.69'	10,748 cf	**Custom Stage Data (Prismatic)** Listed below (Recalc)

Elevation (feet)	Surf.Area (sq-ft)	Inc.Store (cubic-feet)	Cum.Store (cubic-feet)
1,239.69	0	0	0
1,240.00	1,432	222	222
1,241.00	2,461	1,947	2,168
1,242.00	3,619	3,040	5,208
1,243.25	5,244	5,539	10,748

Device	Routing	Invert	Outlet Devices
#1	Primary	1,239.69'	**18.0" Round Culvert** L= 26.0' RCP, square edge headwall, Ke= 0.500 Inlet / Outlet Invert= 1,239.69' / 1,239.47' S= 0.0085 '/' Cc= 0.900 n= 0.013, Flow Area= 1.77 sf
#2	Device 1	1,239.69'	**15.5" Vert. Orifice/Grate** C= 0.600

Primary OutFlow Max=8.67 cfs @ 12.03 hrs HW=1,242.23' TW=1,240.34' (Fixed TW Elev= 1,240.34')
↑**1=Culvert** (Passes 8.67 cfs of 11.31 cfs potential flow)
↑**2=Orifice/Grate** (Orifice Controls 8.67 cfs @ 6.61 fps)

Pond 14P: (new Pond)

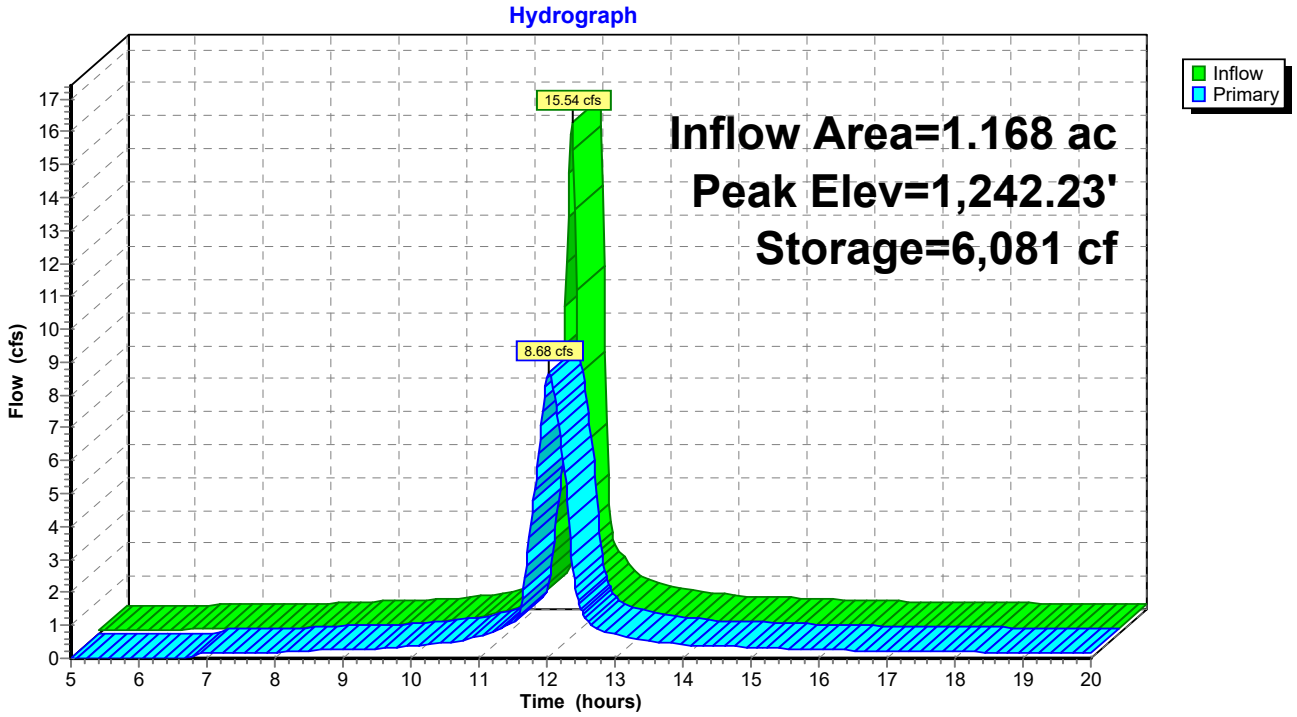

Pond 14P: (new Pond)

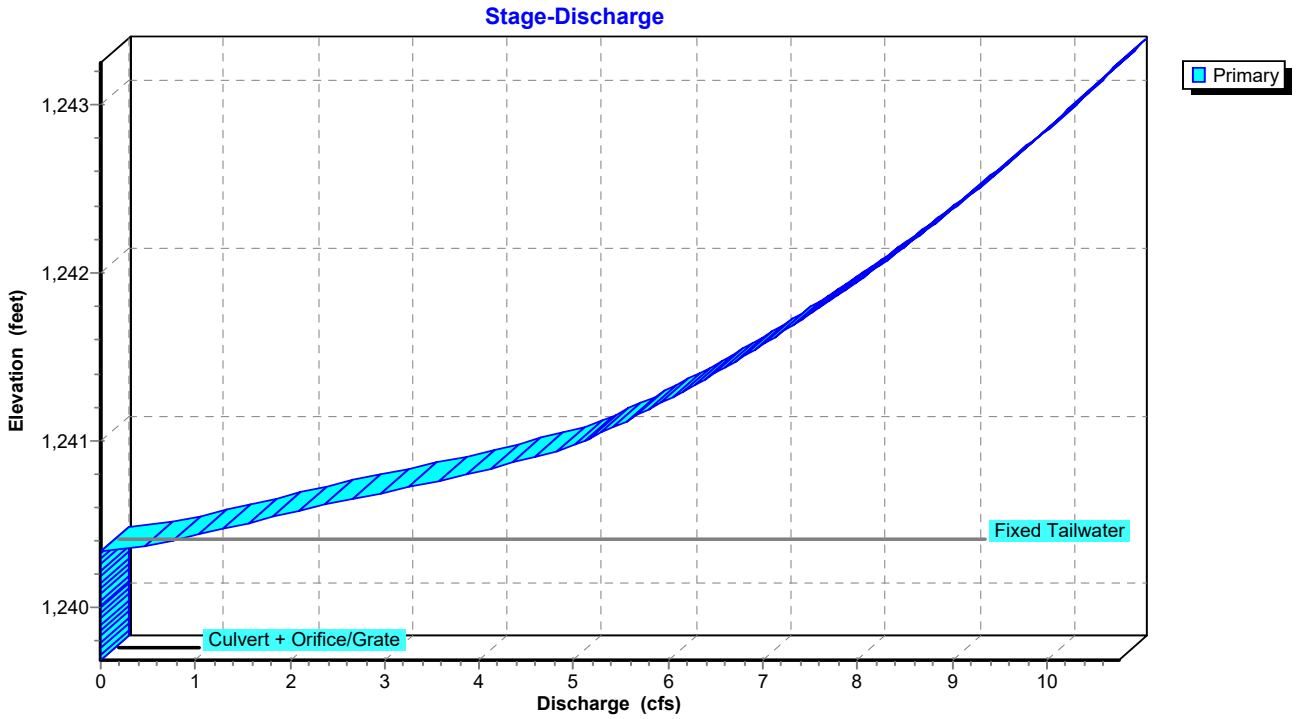

Pond 14P: (new Pond)

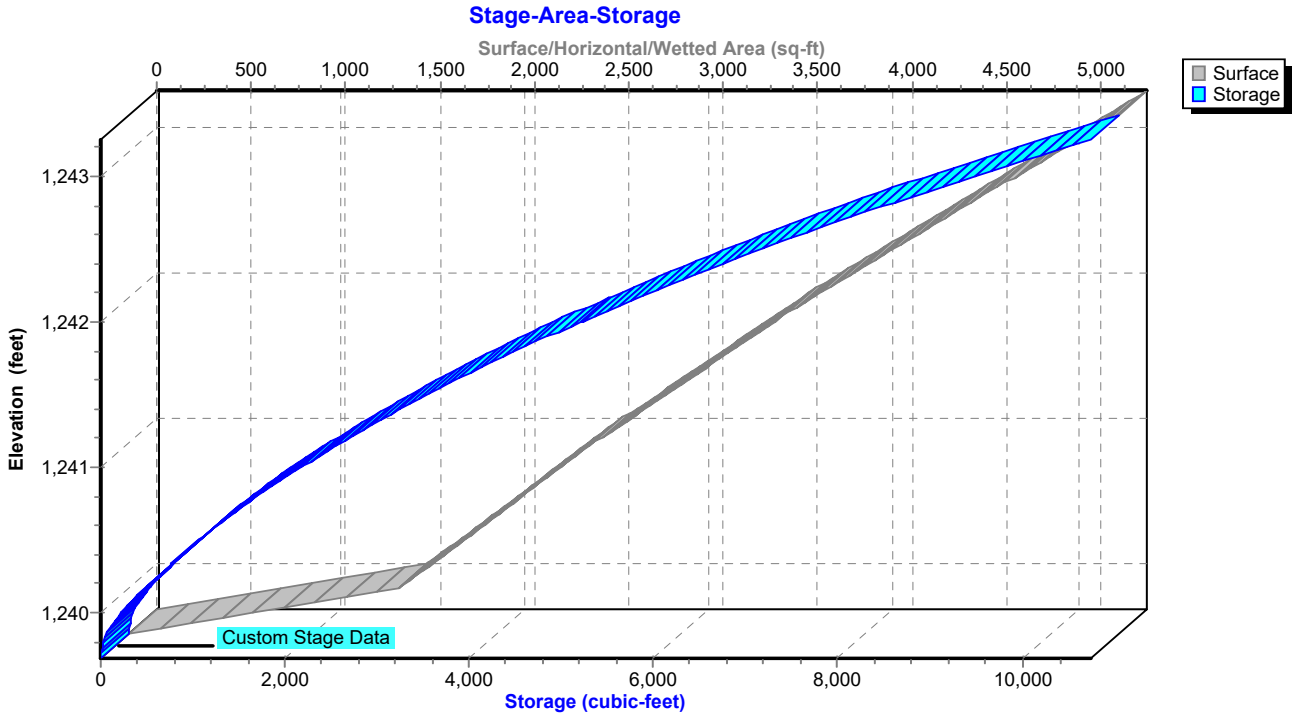

Hydrograph for Pond 14P: (new Pond)

Time (hours)	Inflow (cfs)	Storage (cubic-feet)	Elevation (feet)	Primary (cfs)
5.00	0.09	3	1,239.73	0.00
5.40	0.10	144	1,239.94	0.00
5.80	0.12	301	1,240.05	0.00
6.20	0.13	477	1,240.17	0.00
6.60	0.14	670	1,240.28	0.00
7.00	0.15	784	1,240.35	0.15
7.40	0.16	785	1,240.35	0.16
7.80	0.18	786	1,240.35	0.18
8.20	0.20	788	1,240.35	0.19
8.60	0.24	792	1,240.35	0.23
9.00	0.28	796	1,240.36	0.27
9.40	0.29	798	1,240.36	0.29
9.80	0.33	802	1,240.36	0.33
10.20	0.41	809	1,240.36	0.40
10.60	0.51	823	1,240.37	0.50
11.00	0.68	857	1,240.39	0.65
11.40	1.04	930	1,240.43	0.97
11.80	**6.87**	**2,008**	**1,240.93**	**4.80**
12.20	**1.90**	**3,468**	**1,241.48**	**6.72**
12.60	0.94	970	1,240.45	1.12
13.00	0.70	874	1,240.40	0.74
13.40	0.56	840	1,240.38	0.58
13.80	0.46	817	1,240.37	0.47
14.20	0.39	808	1,240.36	0.39
14.60	0.36	805	1,240.36	0.36
15.00	0.33	802	1,240.36	0.33
15.40	0.30	799	1,240.36	0.30
15.80	0.27	796	1,240.36	0.27
16.20	0.24	793	1,240.35	0.25
16.60	0.23	792	1,240.35	0.23
17.00	0.22	791	1,240.35	0.22
17.40	0.21	790	1,240.35	0.21
17.80	0.20	789	1,240.35	0.20
18.20	0.19	788	1,240.35	0.19
18.60	0.18	787	1,240.35	0.18
19.00	0.17	786	1,240.35	0.17
19.40	0.16	785	1,240.35	0.16
19.80	0.15	784	1,240.35	0.15

Stage-Discharge for Pond 14P: (new Pond)

Elevation (feet)	Primary (cfs)	Elevation (feet)	Primary (cfs)	Elevation (feet)	Primary (cfs)	Elevation (feet)	Primary (cfs)
1,239.69	0.00	1,240.73	3.32	1,241.77	7.54	1,242.81	9.92
1,239.71	0.00	1,240.75	3.50	1,241.79	7.60	1,242.83	9.96
1,239.73	0.00	1,240.77	3.67	1,241.81	7.65	1,242.85	10.00
1,239.75	0.00	1,240.79	3.84	1,241.83	7.70	1,242.87	10.04
1,239.77	0.00	1,240.81	3.98	1,241.85	7.75	1,242.89	10.08
1,239.79	0.00	1,240.83	4.13	1,241.87	7.80	1,242.91	10.11
1,239.81	0.00	1,240.85	4.26	1,241.89	7.86	1,242.93	10.15
1,239.83	0.00	1,240.87	4.40	1,241.91	7.91	1,242.95	10.19
1,239.85	0.00	1,240.89	4.53	1,241.93	7.96	1,242.97	10.23
1,239.87	0.00	1,240.91	4.66	1,241.95	8.01	1,242.99	10.27
1,239.89	0.00	1,240.93	4.78	1,241.97	8.06	1,243.01	10.31
1,239.91	0.00	1,240.95	4.90	1,241.99	8.10	1,243.03	10.35
1,239.93	0.00	1,240.97	5.00	1,242.01	8.15	1,243.05	10.39
1,239.95	0.00	1,240.99	5.09	1,242.03	8.20	1,243.07	10.42
1,239.97	0.00	1,241.01	5.16	1,242.05	8.25	1,243.09	10.46
1,239.99	0.00	1,241.03	5.24	1,242.07	8.30	1,243.11	10.50
1,240.01	0.00	1,241.05	5.32	1,242.09	8.35	1,243.13	10.54
1,240.03	0.00	1,241.07	5.39	1,242.11	8.39	1,243.15	10.58
1,240.05	0.00	1,241.09	5.46	1,242.13	8.44	1,243.17	10.61
1,240.07	0.00	1,241.11	5.54	1,242.15	8.49	1,243.19	10.65
1,240.09	0.00	1,241.13	5.61	1,242.17	8.54	1,243.21	10.69
1,240.11	0.00	1,241.15	5.68	1,242.19	8.58	1,243.23	10.73
1,240.13	0.00	1,241.17	5.75	1,242.21	8.63	1,243.25	**10.76**
1,240.15	0.00	1,241.19	5.82	1,242.23	8.67		
1,240.17	0.00	1,241.21	5.88	1,242.25	8.72		
1,240.19	0.00	1,241.23	5.95	1,242.27	8.77		
1,240.21	0.00	1,241.25	6.02	1,242.29	8.81		
1,240.23	0.00	1,241.27	6.08	1,242.31	8.86		
1,240.25	0.00	1,241.29	6.15	1,242.33	8.90		
1,240.27	0.00	1,241.31	6.21	1,242.35	8.95		
1,240.29	0.00	1,241.33	6.28	1,242.37	8.99		
1,240.31	0.00	1,241.35	6.34	1,242.39	9.03		
1,240.33	0.00	1,241.37	6.40	1,242.41	9.08		
1,240.35	0.27	1,241.39	6.47	1,242.43	9.12		
1,240.37	0.50	1,241.41	6.53	1,242.45	9.16		
1,240.39	0.67	1,241.43	6.59	1,242.47	9.21		
1,240.41	0.83	1,241.45	6.65	1,242.49	9.25		
1,240.43	0.98	1,241.47	6.71	1,242.51	9.29		
1,240.45	1.13	1,241.49	6.77	1,242.53	9.34		
1,240.47	1.27	1,241.51	6.82	1,242.55	9.38		
1,240.49	1.42	1,241.53	6.88	1,242.57	9.42		
1,240.51	1.57	1,241.55	6.94	1,242.59	9.46		
1,240.53	1.72	1,241.57	7.00	1,242.61	9.51		
1,240.55	1.87	1,241.59	7.05	1,242.63	9.55		
1,240.57	2.02	1,241.61	7.11	1,242.65	9.59		
1,240.59	2.18	1,241.63	7.17	1,242.67	9.63		
1,240.61	2.33	1,241.65	7.22	1,242.69	9.67		
1,240.63	2.49	1,241.67	7.28	1,242.71	9.71		
1,240.65	2.65	1,241.69	7.33	1,242.73	9.75		
1,240.67	2.82	1,241.71	7.38	1,242.75	9.79		
1,240.69	2.98	1,241.73	7.44	1,242.77	9.84		
1,240.71	3.15	1,241.75	7.49	1,242.79	9.88		

Stage-Area-Storage for Pond 14P: (new Pond)

Elevation (feet)	Surface (sq-ft)	Storage (cubic-feet)
1,239.69	0	0
1,239.74	231	6
1,239.79	462	23
1,239.84	693	52
1,239.89	924	92
1,239.94	1,155	144
1,239.99	1,386	208
1,240.04	1,473	280
1,240.09	1,525	355
1,240.14	1,576	433
1,240.19	1,628	513
1,240.24	1,679	595
1,240.29	1,730	681
1,240.34	1,782	768
1,240.39	1,833	859
1,240.44	1,885	952
1,240.49	1,936	1,047
1,240.54	1,988	1,145
1,240.59	2,039	1,246
1,240.64	2,091	1,349
1,240.69	2,142	1,455
1,240.74	2,193	1,563
1,240.79	2,245	1,674
1,240.84	2,296	1,788
1,240.89	2,348	1,904
1,240.94	2,399	2,023
1,240.99	2,451	2,144
1,241.04	2,507	2,268
1,241.09	2,565	2,395
1,241.14	2,623	2,524
1,241.19	2,681	2,657
1,241.24	2,739	2,792
1,241.29	2,797	2,931
1,241.34	2,855	3,072
1,241.39	2,913	3,216
1,241.44	2,971	3,363
1,241.49	3,028	3,513
1,241.54	3,086	3,666
1,241.59	3,144	3,822
1,241.64	3,202	3,981
1,241.69	3,260	4,142
1,241.74	3,318	4,307
1,241.79	3,376	4,474
1,241.84	3,434	4,644
1,241.89	3,492	4,817
1,241.94	3,550	4,993
1,241.99	3,607	5,172
1,242.04	3,671	5,354
1,242.09	3,736	5,539
1,242.14	3,801	5,728
1,242.19	3,866	5,920
1,242.24	3,931	6,114
1,242.29	3,996	6,313
1,242.34	4,061	6,514
1,242.39	4,126	6,719
1,242.44	4,191	6,927
1,242.49	4,256	7,138
1,242.54	4,321	7,352
1,242.59	4,386	7,570
1,242.64	4,451	7,791
1,242.69	4,516	8,015
1,242.74	4,581	8,242
1,242.79	4,646	8,473
1,242.84	4,711	8,707
1,242.89	4,776	8,944
1,242.94	4,841	9,185
1,242.99	4,906	9,428
1,243.04	4,971	9,675
1,243.09	5,036	9,925
1,243.14	5,101	10,179
1,243.19	5,166	10,436
1,243.24	**5,231**	**10,695**

Summary for Link 15L: (new Link)

Inflow Area = 1.254 ac, 68.26% Impervious, Inflow Depth > 7.57" for 100 year event
Inflow = 9.49 cfs @ 12.00 hrs, Volume= 0.791 af
Primary = 9.49 cfs @ 12.00 hrs, Volume= 0.791 af, Atten= 0%, Lag= 0.0 min

Primary outflow = Inflow, Time Span= 5.00-20.00 hrs, dt= 0.02 hrs

Link 15L: (new Link)

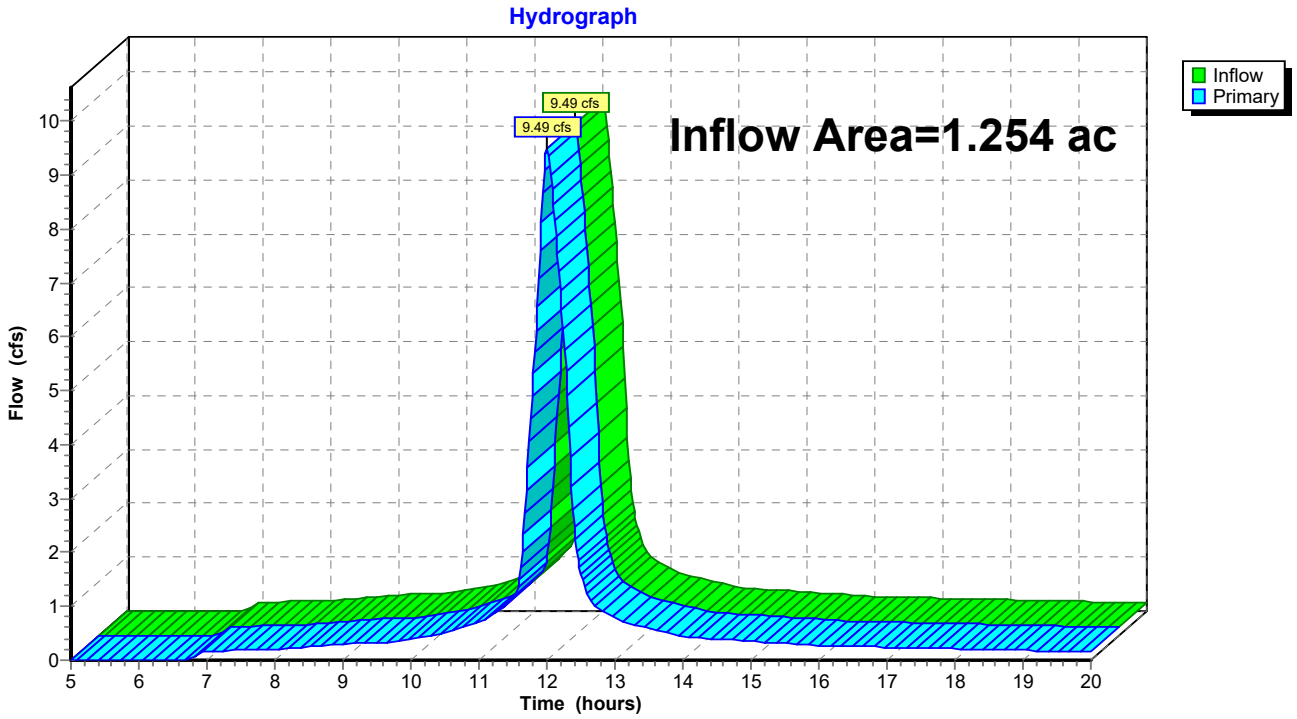

Hydrograph for Link 15L: (new Link)

Time (hours)	Inflow (cfs)	Elevation (feet)	Primary (cfs)
5.00	0.01	**0.00**	0.01
5.20	0.01	0.00	0.01
5.40	0.01	0.00	0.01
5.60	0.01	0.00	0.01
5.80	0.01	0.00	0.01
6.00	0.01	0.00	0.01
6.20	0.01	0.00	0.01
6.40	0.01	0.00	0.01
6.60	0.01	0.00	0.01
6.80	0.05	0.00	0.05
7.00	0.17	0.00	0.17
7.20	0.17	0.00	0.17
7.40	0.18	0.00	0.18
7.60	0.19	0.00	0.19
7.80	0.19	0.00	0.19
8.00	0.20	0.00	0.20
8.20	0.21	0.00	0.21
8.40	0.23	0.00	0.23
8.60	0.25	0.00	0.25
8.80	0.28	0.00	0.28
9.00	0.30	0.00	0.30
9.20	0.31	0.00	0.31
9.40	0.32	0.00	0.32
9.60	0.32	0.00	0.32
9.80	0.35	0.00	0.35
10.00	0.39	0.00	0.39
10.20	0.43	0.00	0.43
10.40	0.49	0.00	0.49
10.60	0.54	0.00	0.54
10.80	0.62	0.00	0.62
11.00	0.71	0.00	0.71
11.20	0.85	0.00	0.85
11.40	1.05	0.00	1.05
11.60	1.51	0.00	1.51
11.80	5.33	0.00	5.33
12.00	**9.49**	0.00	**9.49**
12.20	6.86	0.00	6.86
12.40	2.48	0.00	2.48
12.60	1.19	0.00	1.19
12.80	0.92	0.00	0.92
13.00	0.79	0.00	0.79
13.20	0.69	0.00	0.69
13.40	0.62	0.00	0.62
13.60	0.56	0.00	0.56
13.80	0.51	0.00	0.51
14.00	0.45	0.00	0.45
14.20	0.42	0.00	0.42
14.40	0.40	0.00	0.40
14.60	0.39	0.00	0.39
14.80	0.37	0.00	0.37
15.00	0.36	0.00	0.36
15.20	0.34	0.00	0.34
15.40	0.32	0.00	0.32
15.60	0.31	0.00	0.31
15.80	0.29	0.00	0.29
16.00	0.27	0.00	0.27
16.20	0.26	0.00	0.26
16.40	0.26	0.00	0.26
16.60	0.25	0.00	0.25
16.80	0.25	0.00	0.25
17.00	0.24	0.00	0.24
17.20	0.23	0.00	0.23
17.40	0.23	0.00	0.23
17.60	0.22	0.00	0.22
17.80	0.22	0.00	0.22
18.00	0.21	0.00	0.21
18.20	0.21	0.00	0.21
18.40	0.20	0.00	0.20
18.60	0.19	0.00	0.19
18.80	0.19	0.00	0.19
19.00	0.18	0.00	0.18
19.20	0.18	0.00	0.18
19.40	0.17	0.00	0.17
19.60	0.17	0.00	0.17
19.80	0.16	0.00	0.16
20.00	0.15	0.00	0.15

Hydrologic Soil Group and Surface Runoff

This table gives estimates of various soil water features. The estimates are used in land use planning that involves engineering considerations.

Hydrologic soil groups are based on estimates of runoff potential. Soils are assigned to one of four groups according to the rate of water infiltration when the soils are not protected by vegetation, are thoroughly wet, and receive precipitation from long-duration storms.

The four hydrologic soil groups are:

Group A. Soils having a high infiltration rate (low runoff potential) when thoroughly wet. These consist mainly of deep, well drained to excessively drained sands or gravelly sands. These soils have a high rate of water transmission.

Group B. Soils having a moderate infiltration rate when thoroughly wet. These consist chiefly of moderately deep or deep, moderately well drained or well drained soils that have moderately fine texture to moderately coarse texture. These soils have a moderate rate of water transmission.

Group C. Soils having a slow infiltration rate when thoroughly wet. These consist chiefly of soils having a layer that impedes the downward movement of water or soils of moderately fine texture or fine texture. These soils have a slow rate of water transmission.

Group D. Soils having a very slow infiltration rate (high runoff potential) when thoroughly wet. These consist chiefly of clays that have a high shrink-swell potential, soils that have a high water table, soils that have a claypan or clay layer at or near the surface, and soils that are shallow over nearly impervious material. These soils have a very slow rate of water transmission.

If a soil is assigned to a dual hydrologic group (A/D, B/D, or C/D), the first letter is for drained areas and the second is for undrained areas.

Surface runoff refers to the loss of water from an area by flow over the land surface. Surface runoff classes are based on slope, climate, and vegetative cover. The concept indicates relative runoff for very specific conditions. It is assumed that the surface of the soil is bare and that the retention of surface water resulting from irregularities in the ground surface is minimal. The classes are negligible, very low, low, medium, high, and very high.

Report—Hydrologic Soil Group and Surface Runoff

Absence of an entry indicates that the data were not estimated. The dash indicates no documented presence.

Hydrologic Soil Group and Surface Runoff–Cleveland County, Oklahoma			
Map symbol and soil name	**Pct. of map unit**	**Surface Runoff**	**Hydrologic Soil Group**

Hydrologic Soil Group and Surface Runoff–Cleveland County, Oklahoma			
Map symbol and soil name	**Pct. of map unit**	**Surface Runoff**	**Hydrologic Soil Group**
49—Kirkland-Urban land-Pawhuska complex, 0 to 3 percent slopes			
Kirkland	41	Very high	D
Urban land	39	Low	D
Pawhuska	15	Very high	D

Data Source Information

Soil Survey Area: Cleveland County, Oklahoma
Survey Area Data: Version 20, Sep 2, 2022

DETENTION POND PLANS

TO SERVE

HIGHLAND WEST JR HIGH CLASSROOM ADDITION

A PART OF THE NE/4 OF SEC. 16, T-10-N, R-3-W, I.M.
MOORE, CLEVELAND COUNTY, OKLAHOMA

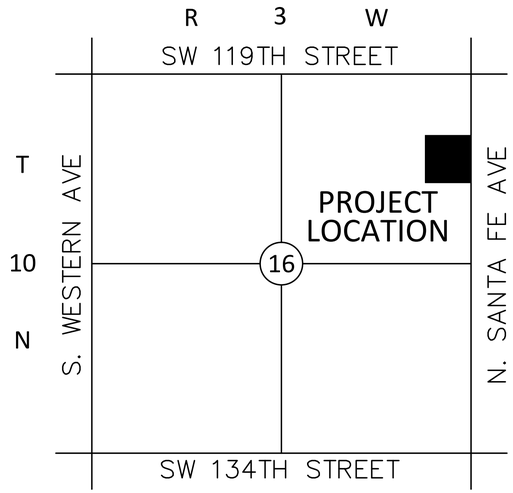

N NOT TO SCALE

SHEET INDEX

SHEET NUMBER	SHEET TITLE	DATE	REV/BID/CO/ADD
C0.00	DETENTION COVER SHEET	09.25.23	
C3.00	GRADING PLAN	09.25.23	
C3.01	DRAINAGE - HISTORIC	09.25.23	
C 3.02	DRAINAGE - DEVELOPED	09.25.23	
C 3.03	DETENTION POND PLAN	09.25.23	
C 5.00	EROSION CONTROL PLAN	09.25.23	
C 5.01	EROSION CONTROL NOTES	09.25.23	

BENCHMARK DATA

BENCHMARK #1
DESC: CONC. SIDEWALK
NORTHING: 732420.67
EASTING: 2113951.32
ELEVATION: 1246.12

BENCHMARK #2
DESC: CUT X
NORTHING: 732831.70
EASTING: 2113951.35
ELEVATION: 1248.00

VERTICAL DATUM: NAVD 88 OKC GPS
MONUMENT

GENERAL NOTES:

A. CONTRACTOR SHALL BE RESPONSIBLE FOR RAZING AND REMOVAL OF THE EXISTING STRUCTURES, RELATED UTILITIES, PAVING, UNDERGROUND STORAGE TANKS AND ANY OTHER EXISTING IMPROVEMENTS AS NOTED.

B. CONTRACTOR IS TO REMOVE AND DISPOSE OF ALL DEBRIS, RUBBISH AND OTHER MATERIALS RESULTING FROM PREVIOUS AND CURRENT DEMOLITION OPERATIONS. DISPOSAL WILL BE IN ACCORDANCE WITH ALL LOCAL, STATE AND/OR FEDERAL REGULATIONS GOVERNING SUCH OPERATIONS.

C. THE GENERAL CONTRACTOR WILL BE HELD SOLELY RESPONSIBLE FOR AND SHALL TAKE ALL PRECAUTIONS NECESSARY TO AVOID PROPERTY DAMAGE TO ADJACENT PROPERTIES DURING THE CONSTRUCTION PHASES OF THIS PROJECT.

D. WARRANTY/DISCLAIMER: THE DESIGNS REPRESENTED IN THESE PLANS ARE IN ACCORDANCE WITH ESTABLISHED PRACTICES OF CIVIL ENGINEERING FOR THE DESIGN FUNCTIONS AND USES INTENDED BY THE OWNER AT THIS TIME. HOWEVER, NEITHER THE ENGINEER NOR ITS PERSONNEL CAN OR DO WARRANT THESE DESIGNS OR PLANS AS CONSTRUCTED EXCEPT IN THE SPECIFIC CASES WHERE THE ENGINEER INSPECTS AND CONTROLS THE PHYSICAL CONSTRUCTION ON A CONTEMPORARY BASIS AT THE SITE.

E. SAFETY NOTICE TO CONTRACTOR: IN ACCORDANCE WITH GENERALLY ACCEPTED CONSTRUCTION PRACTICES, THE CONTRACTOR SHALL BE SOLELY AND COMPLETELY RESPONSIBLE FOR CONDITIONS OF THE JOB SITE, INCLUDING SAFETY OF ALL PERSONS AND PROPERTY DURING PERFORMANCE OF THE WORK. THIS REQUIREMENT WILL APPLY CONTINUOUSLY AND NOT BE LIMITED TO NORMAL WORKING HOURS. ANY CONSTRUCTION OBSERVATION BY THE ENGINEER OF THE CONTRACTOR'S PERFORMANCE IS NOT INTENDED TO INCLUDE REVIEW OF THE ADEQUACY OF THE CONTRACTOR'S SAFETY MEASURES, IN, ON OR NEAR THE CONSTRUCTION SITE.

F. ALL CONSTRUCTION WITHIN STATE HIGHWAY DEPARTMENT RIGHT-OF-WAY SHALL BE COORDINATED WITH THE HIGHWAY DEPARTMENT RESIDENT MAINTENANCE ENGINEER.

G. ALL CONSTRUCTION TO BE IN STRICT ACCORDANCE WITH CURRENT CITY OF MOORE STANDARDS AND SPECIFICATIONS

CEDAR CREEK
ENGINEERING • PLANNING • CONSULTING
P.O. Box 14534 Oklahoma City, OK 73113
405-778-3385
www.cedarcreekinc.com
OK CA 5864
EXP. 06/30/24

LOCATION MAP:

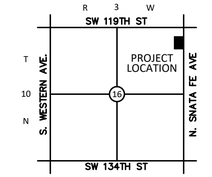

NOT TO SCALE

PROJECT:

HIGHLAND WEST JR. HIGH

901 N. SANTA FE
MOORE, OK

PROJECT NUMBER:	23069
DRAWING DATE:	09.25.23
ISSUE DATE:	09.25.23

SEAL:

SUBMITTAL:

PERMIT SET

REVISIONS:

MARK	DATE	DESCRIPTION

THESE PLANS AND DRAWINGS ARE NOT TO BE REPRODUCED, CHANGED OR COPIED IN ANY FORM OR MANNER WHATSOEVER WITHOUT FIRST OBTAINING THE WRITTEN PERMISSION AND CONSENT OF CEDAR CREEK CONSULTING INC. THIS SHEET IS NOT TO BE USED FOR CONSTRUCTION UNLESS THE ISSUE DATE IN THE TITLE BLOCK COINCIDES WITH OR POST DATES THE DRAWING DATE. ANY CHANGES MADE FROM THESE PLANS WITHOUT CONSENT OF CEDAR CREEK CONSULTING INC. ARE UNAUTHORIZED, AND SHALL RELIEVE CEDAR CREEK CONSULTING OF RESPONSIBILITY FOR ALL CONSEQUENCES ARRIVING OUT OF SUCH CHANGES.

DRAWING TITLE:

DETENTION COVER

SHEET:

C0.00

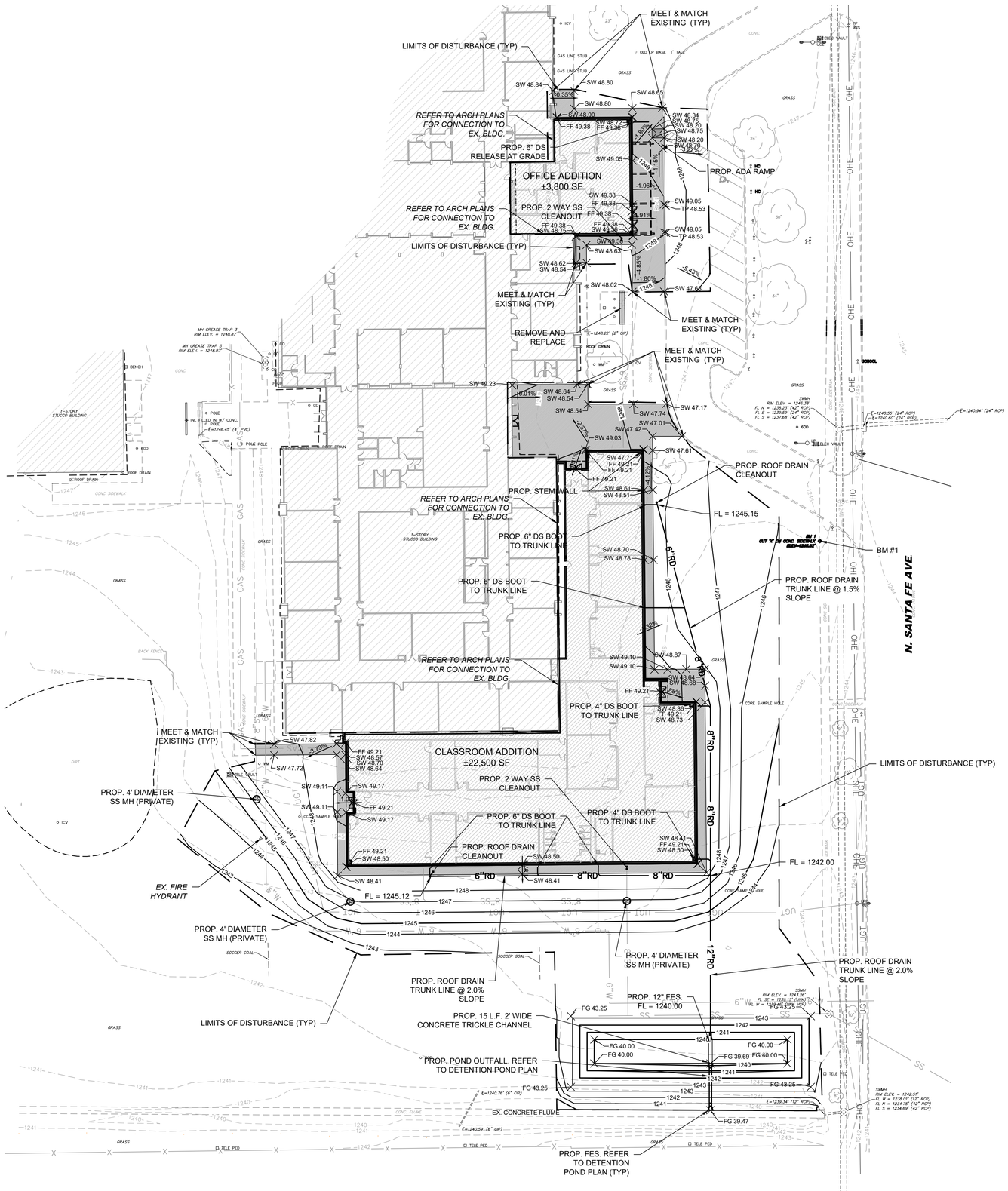

LEGEND

- BOUNDARY LINE
- RIGHT OF WAY LINE
- EASEMENT LINE
- EXISTING CONCRETE CURB AND GUTTER
- PROPOSED CONCRETE CURB AND GUTTER
- PROPOSED FIRE LANE STRIPING
- OHE — OVERHEAD ELECTRIC
- UGE — UNDERGROUND ELECTRIC
- GAS — GAS LINE
- UGT — UNDERGROUND TELEPHONE
- FO — UNDERGROUND FIBER OPTIC
- SS — SANITARY SEWER
- 8"W — WATERLINE
- BENCHMARK

- FIRE HYDRANT
- WATER VALVE
- EX. WATER METER PIT
- EX. WATER METER
- PROP. WATER METER
- EX. SPRINKLER VALVE
- EX. AUTO SPRINKLER
- EX. ELECT. PEDESTAL
- EX. ELECT. TRANSFORMER
- EX. ELECT. METER
- PROP. ELECT. METER
- EX. AIR CONDITIONER
- EX. SIGNAGE
- EX. LIGHT POLE
- PROP. LIGHT POLE
- EX. BOLLARD
- EX. POWER POLE
- PROP. POWER POLE
- EX. TELEPHONE PED.
- EX. TELEPHONE MANHOLE
- EX. TRAFFIC SIGNAL LIGHT
- EX. TRAFFIC CONTROL BOX
- EX. FLAG POLE
- EX. YARD LIGHT
- EX. GREASE TRAP
- EX. SS MANHOLE
- PROP. SS MANHOLE
- EX. GAS METER
- PROP. GAS METER
- EX. ELECT. MANHOLE
- EX. STORM MANHOLE
- PROP. INLETS (SEE GRADING PLAN FOR TYPE)
- VERTICAL SEPARATION REQUIREMENT

BENCHMARK DATA

BENCHMARK #1
DESC: CONC. SIDEWALK
NORTHING: 732420.67
EASTING: 2113951.32
ELEVATION: 1246.12

BENCHMARK #2
DESC: CUT X
NORTHING: 732831.70
EASTING: 2113951.35
ELEVATION: 1248.00

VERTICAL DATUM: NAVD 88 OKC GPS MONUMENT

GRADING NOTES

A. CONTRACTOR SHALL REFER TO THE SITE SPECIFIC GEOTECHNICAL REPORT FOR EXISTING SOIL CONDITIONS, CONSIDERATIONS, AND RECOMMENDATIONS.

B. CONTRACTOR SHALL REFER TO THE CONSTRUCTION DOCUMENTS INCLUDING BUT NOT LIMITED TO THE WRITTEN SPECIFICATIONS, CONSTRUCTION DRAWINGS, STORM WATER POLLUTION PLAN, AND GEOTECHNICAL REPORT.

C. CONTRACTOR IS RESPONSIBLE FOR THEIR OWN HORIZONTAL AND VERTICAL CONTROL, REFERENCE POINTS AND CONSTRUCTION STAKING AS INCIDENTAL TO THE PROJECT.

D. THE CONTRACTOR SHALL FIELD VERIFY EXISTING ELEVATIONS/PROPERTY LINES/UTILITIES/DRAINAGE PRIOR TO CONSTRUCTION START.

E. ALL SITE EXCAVATION SHALL BE CONSIDERED UNCLASSIFIED EXCAVATION.

F. GENERAL CONTRACTOR TO PROVIDE A UNIT PRICE FOR REMOVAL AND REPLACEMENT OF SOILS ON THIS SITE SHOULD REMOVAL BE REQUIRED.

G. ALL WORK NOT CLASSIFIED AS A CONTRACT PAY ITEM SHALL BE CONSIDERED AS INCIDENTAL AND THE COST THEREOF SHALL BE INCLUDED IN THE UNIT PRICE BID FOR ITEMS WHICH ARE CLASSIFIED FOR PAYMENT.

H. CONTRACTOR SHALL PROVIDE FINAL GRADES THAT DO NOT OBSTRUCT ANY UTILITY ACCESS AND PROVIDE A SMOOTH TRANSITION TO MEET AND MATCH EXISTING GRADES ON ALL SIDES.

I. ADA ROUTES ARE NOT TO EXCEED 1:20 RUNNING SLOPE AND 2% CROSS SLOPE. HANDICAP PARKING AND ACCESS AISLES SHALL NOT EXCEED 2% IN ANY DIRECTION.

J. ALL NATURAL GROUND SLOPES SHALL NOT EXCEED 3:1. PAVING SLOPES SHALL NOT EXCEED 8%.

K. CONTRACTOR SHALL ENSURE THAT ALL NECESSARY EARTH DISTURBING PERMITS HAVE BEEN ACQUIRED AND MEET THE CONDITIONS/REQUIREMENTS SET FORTH IN THE PERMITS PRIOR TO CONSTRUCTION.

L. CONTRACTOR IS REQUIRED TO CALL ONE CALL AS WELL AS THE APPROPRIATE UTILITY COMPANY AT LEAST 48 HOURS BEFORE ANY EXCAVATION/CONSTRUCTION ACTIVITIES TAKE PLACE. IT SHALL BE THE RESPONSIBILITY OF THE CONTRACTOR TO RELOCATE ALL EXISTING UTILITIES WHICH ARE IN CONFLICT WITH PROPOSED IMPROVEMENTS.

M. THE CONTRACTOR SHALL GRADE SITE TO ENSURE ALL SURFACE WATER DRAINAGE IS AWAY FROM THE BUILDING AND PROVIDES POSITIVE DRAINAGE SO THAT NO STANDING/PONDING WATER TAKES PLACE ON SITE OR ON ADJACENT PROPERTIES.

N. ALL CONSTRUCTION SHALL BE IN STRICT ACCORDANCE WITH THE OWNERS DESIGN GUIDELINES AND SPECIFICATIONS, AND WHERE APPLICABLE SHALL MEET THE REQUIREMENTS OF THE GOVERNING/PERMITTING AUTHORITY HAVING JURISDICTION.

O. THE BUILDING SUBGRADE SHALL BE CONSTRUCTED TO INCLUDE A MINIMUM OF 10 FEET BEYOND THE BUILDING LIMITS AS SHOWN ON THE PLANS, OR AS DIRECTED BY THE OWNER.

P. REFERENCE ARCHITECTURAL AND STRUCTURAL DRAWINGS FOR REQUIRED FLOOR SLAB THICKNESS.

Q. THE BUILDING PAD SUBGRADE SHALL BE PREPARED IN STRICT ACCORDANCE WITH THE GEOTECHNICAL ENGINEERING STUDY AND THE CIVIL SPECIFICATIONS.

R. ESTABLISH FINAL SUBGRADE ELEVATIONS TO ALLOW FOR PAVEMENT/SLAB SECTIONS AS INDICATED ON THE PLANS.

S. IF CONFLICTS EXIST BETWEEN THE GEOTECHNICAL REPORT AND THE CONSTRUCTION DRAWINGS AND SPECIFICATIONS, THE MORE STRINGENT REQUIREMENTS SHALL APPLY.

SPOT ELEVATION LEGEND

TC - TOP OF CURB	FF - FINISH FLOOR
G - GUTTER	FG - FINAL GRADE
TP - TOP OF PAVEMENT	TW - TOP OF WALL
HP - HIGH POINT	BW - BOTTOM OF WALL
LP - LOW POINT	NOTE: BW IS BOTTOM OF WALL AT GRADE, NOT FOOTING
SW - SIDEWALK	

VERTICAL SEPARATION REQUIREMENT

N

SCALE IN FEET
0 30' 45' 60'

BEFORE YOU DIG CALL OKIE 811

CEDAR CREEK
ENGINEERING • PLANNING • CONSULTING
P.O. Box 14534 Oklahoma City, OK 73113
405-778-3385
www.cedarcreekinc.com
OK CA 5864
EXP. 06/30/24

LOCATION MAP:

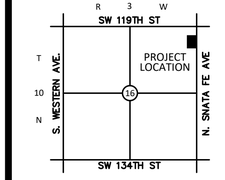

NOT TO SCALE

PROJECT:

HIGHLAND WEST JR. HIGH

901 N. SANTA FE
MOORE, OK

PROJECT NUMBER: 23069
DRAWING DATE: 09.25.23
ISSUE DATE: 09.25.23

SEAL:

LICENSED PROFESSIONAL ENGINEER
ANDREW WILSON
24073
OKLAHOMA
09.25.23

SUBMITTAL:

PERMIT SET

REVISIONS:

MARK	DATE	DESCRIPTION

THESE PLANS AND DRAWINGS ARE NOT TO BE REPRODUCED, CHANGED OR COPIED IN ANY FORM OR MANNER WHATSOEVER WITHOUT FIRST OBTAINING THE WRITTEN PERMISSION AND CONSENT OF CEDAR CREEK CONSULTING INC. THIS SHEET IS NOT TO BE USED FOR CONSTRUCTION UNLESS THE ISSUE DATE IN THE TITLE BLOCK COINCIDES WITH OR POST DATES THE DRAWING DATE. ANY CHANGES MADE FROM THESE PLANS WITHOUT CONSENT OF CEDAR CREEK CONSULTING INC. ARE UNAUTHORIZED, AND SHALL RELIEVE CEDAR CREEK CONSULTING OF RESPONSIBILITY FOR ALL CONSEQUENCES ARRIVING OUT OF SUCH CHANGES.

DRAWING TITLE:

GRADING PLAN

SHEET:

C3.00

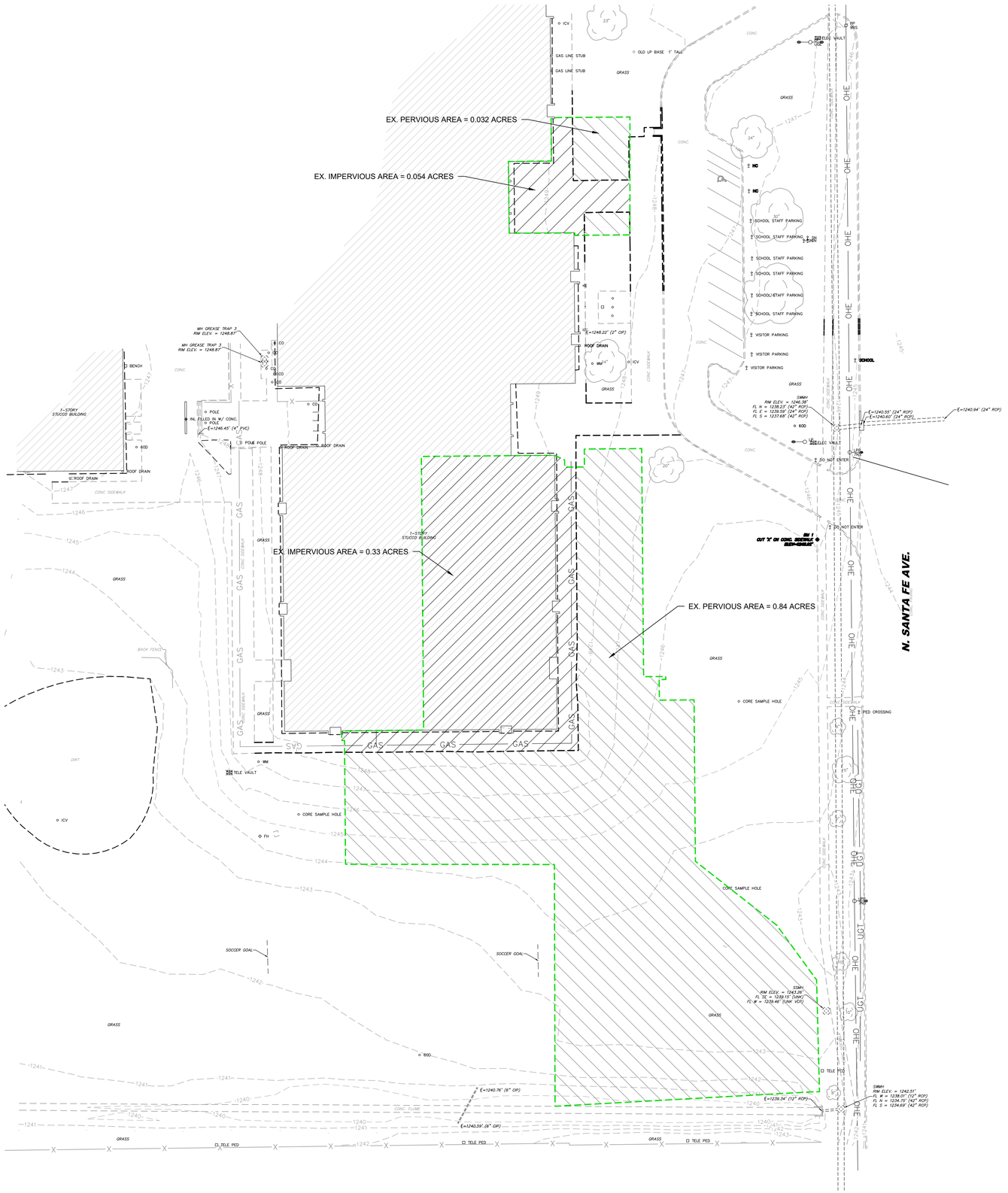

DRAINAGE LEGEND

- EXISTING PERVIOUS CN = 80
- EXISTING IMPERVIOUS CN = 98

N

SCALE IN FEET

0 30' 45' 60'

BEFORE YOU DIG 811 CALL OKIE

CEDAR CREEK
ENGINEERING • PLANNING • CONSULTING
P.O. Box 14534 Oklahoma City, OK 73113
405-778-3385
www.cedarcreekinc.com
OK CA 5864
EXP. 06/30/24

LOCATION MAP:

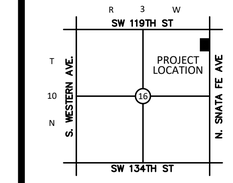

PROJECT:

HIGHLAND WEST JR. HIGH

901 N. SANTA FE
MOORE, OK

PROJECT NUMBER:	23069
DRAWING DATE:	09.25.23
ISSUE DATE:	09.25.23

SEAL:

LICENSED PROFESSIONAL ENGINEER
ANDREW WILSON
24073
OKLAHOMA
09.25.23

SUBMITTAL:

PERMIT SET

REVISIONS:

MARK	DATE	DESCRIPTION

THESE PLANS AND DRAWINGS ARE NOT TO BE REPRODUCED, CHANGED OR COPIED IN ANY FORM OR MANNER WHATSOEVER WITHOUT FIRST OBTAINING THE WRITTEN PERMISSION AND CONSENT OF CEDAR CREEK CONSULTING INC. THIS SHEET IS NOT TO BE USED FOR CONSTRUCTION UNLESS THE ISSUE DATE IN THE TITLE BLOCK COINCIDES WITH OR POST DATES THE DRAWING DATE. ANY CHANGES MADE FROM THESE PLANS WITHOUT CONSENT OF CEDAR CREEK CONSULTING INC. ARE UNAUTHORIZED, AND SHALL RELIEVE CEDAR CREEK CONSULTING OF RESPONSIBILITY FOR ALL CONSEQUENCES ARRIVING OUT OF SUCH CHANGES.

DRAWING TITLE:

DRAINAGE - HISTORIC

SHEET:

C3.01

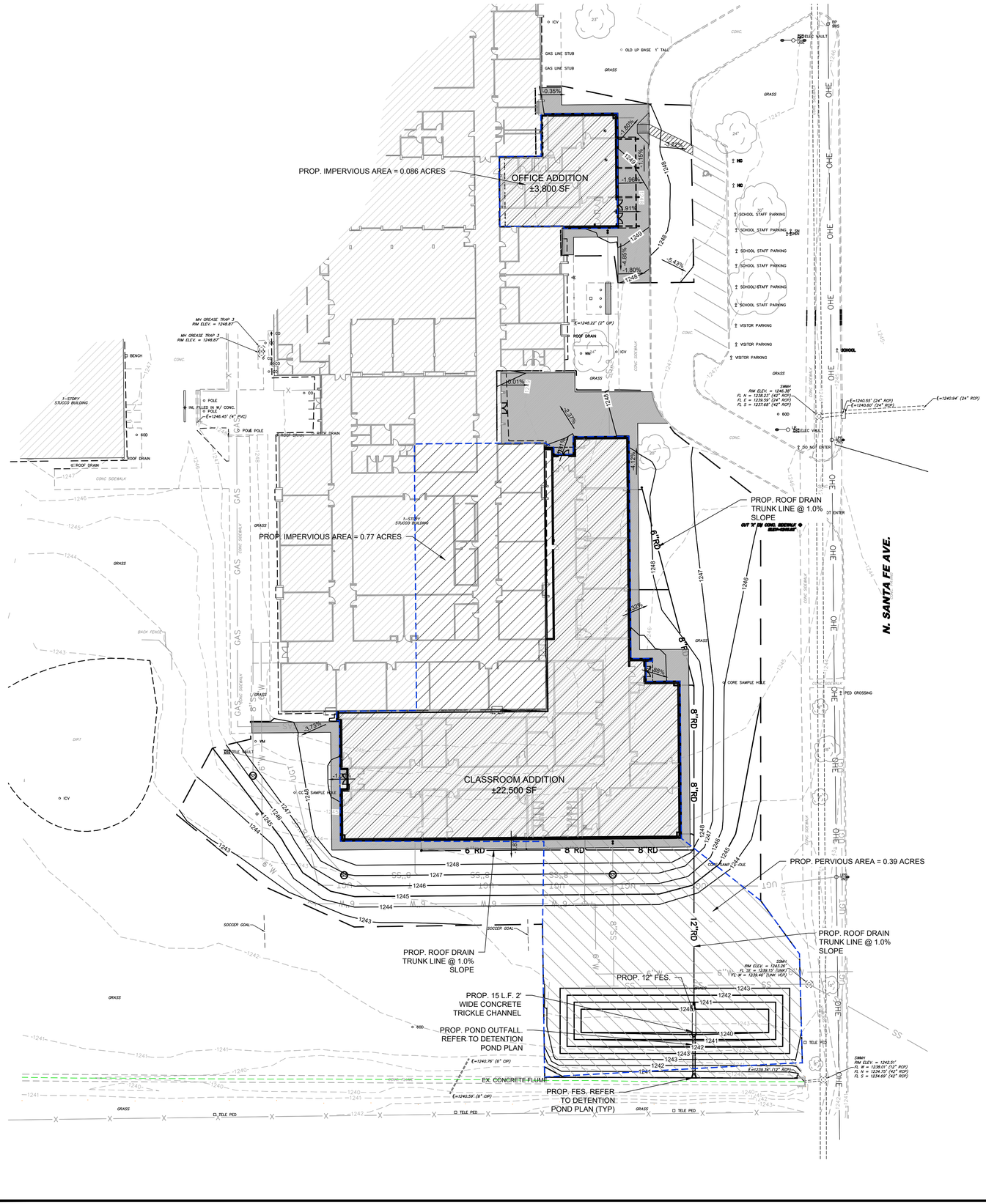

CEDAR CREEK
ENGINEERING • PLANNING • CONSULTING
P.O. Box 14534 Oklahoma City, OK 73113
405-778-3385
www.cedarcreekinc.com
OK CA 5864
EXP. 06/30/24

LOCATION MAP:

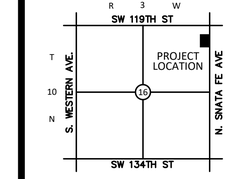

NOT TO SCALE

PROJECT:

HIGHLAND WEST JR. HIGH

901 N. SANTA FE
MOORE, OK

PROJECT NUMBER:	23069
DRAWING DATE:	09.25.23
ISSUE DATE:	09.25.23

SEAL:

SUBMITTAL:

PERMIT SET

REVISIONS:

MARK	DATE	DESCRIPTION

THESE PLANS AND DRAWINGS ARE NOT TO BE REPRODUCED, CHANGED OR COPIED IN ANY FORM OR MANNER WHATSOEVER WITHOUT FIRST OBTAINING THE WRITTEN PERMISSION AND CONSENT OF CEDAR CREEK CONSULTING INC. THIS SHEET IS NOT TO BE USED FOR CONSTRUCTION UNLESS THE ISSUE DATE IN THE TITLE BLOCK COINCIDES WITH OR POST DATES THE DRAWING DATE. ANY CHANGES MADE FROM THESE PLANS WITHOUT CONSENT OF CEDAR CREEK CONSULTING INC. ARE UNAUTHORIZED, AND SHALL RELIEVE CEDAR CREEK CONSULTING OF RESPONSIBILITY FOR ALL CONSEQUENCES ARRIVING OUT OF SUCH CHANGES

DRAWING TITLE:

DRAINAGE - DEVELOPED

SHEET:

C3.02

BEFORE YOU DIG CALL OKIE

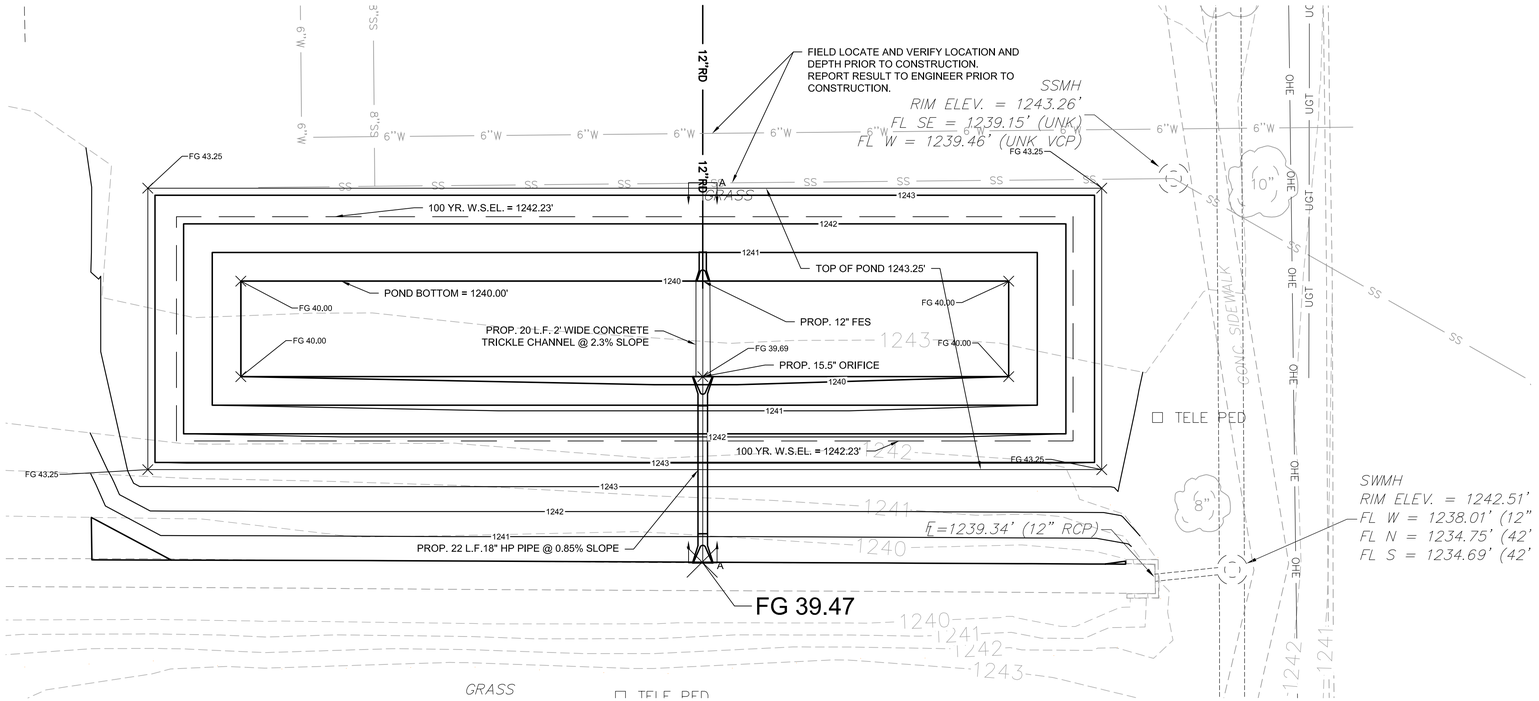

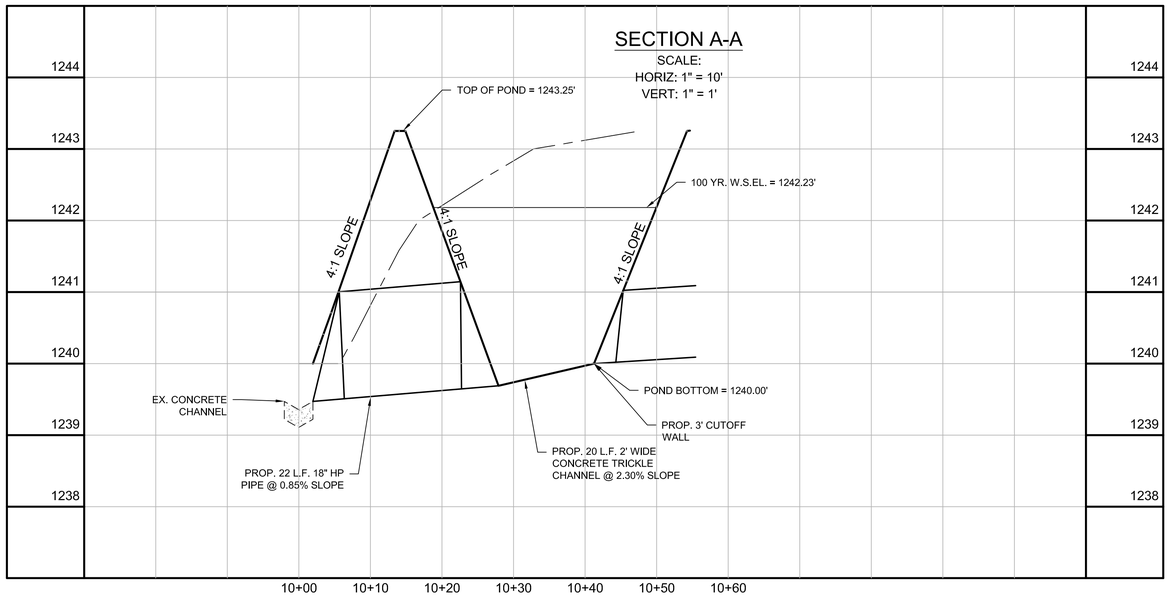

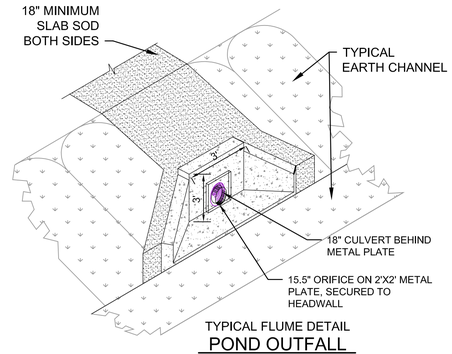

TYPICAL FLUME DETAIL

POND OUTFALL

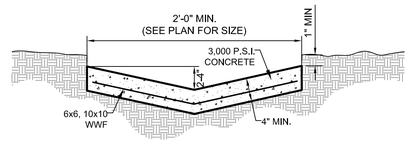

TRICKLE CHANNEL DETAIL

NOT TO SCALE

N

SCALE IN FEET
0 10' 15' 20'

BEFORE YOU DIG 811 CALL OKIE

CEDAR CREEK
ENGINEERING • PLANNING • CONSULTING
P.O. Box 14534 Oklahoma City, OK 73113
405-778-3385
www.cedarcreekinc.com
OK CA 5864
EXP. 06/30/24

LOCATION MAP:

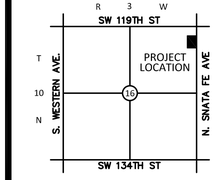

NOT TO SCALE

PROJECT:

HIGHLAND WEST JR. HIGH

901 N. SANTA FE
MOORE, OK

PROJECT NUMBER: 23069
DRAWING DATE: 09.25.23
ISSUE DATE: 09.25.23

SEAL:

LICENSED PROFESSIONAL ENGINEER
ANDREW WILSON 24273
OKLAHOMA
9.25.23

SUBMITTAL:

PERMIT SET

REVISIONS:

MARK	DATE	DESCRIPTION

THESE PLANS AND DRAWINGS ARE NOT TO BE REPRODUCED, CHANGED OR COPIED IN ANY FORM OR MANNER WHATSOEVER WITHOUT FIRST OBTAINING THE WRITTEN PERMISSION AND CONSENT OF CEDAR CREEK CONSULTING INC. THIS SHEET IS NOT TO BE USED FOR CONSTRUCTION UNLESS THE ISSUE DATE IN THE TITLE BLOCK COINCIDES WITH OR POST DATES THE DRAWING DATE. ANY CHANGES MADE FROM THESE PLANS WITHOUT CONSENT OF CEDAR CREEK CONSULTING INC. ARE UNAUTHORIZED, AND SHALL RELIEVE CEDAR CREEK CONSULTING OF RESPONSIBILITY FOR ALL CONSEQUENCES ARRIVING OUT OF SUCH CHANGES.

DRAWING TITLE:

DETENTION POND PLAN

SHEET:

C3.03

BEFORE YOU DIG 811 1-800-522-0OKIE CALL OKIE

N

SCALE IN FEET
0 30' 45' 60'

SITE DATA

TOTAL AREA OF CONSTRUCTION SITE : 1.80 ACRES
TOTAL AREA TO BE DISBURDED: 1.80 ACRES
CURRENT (EXISTING) IMPERVIOUS AREA: 0.38
POST-CONSTRUCTION IMPERVIOUS AREA: 0.85
POST CONSTRUCTION RUNOFF COEFFICIENT: C = 0.68

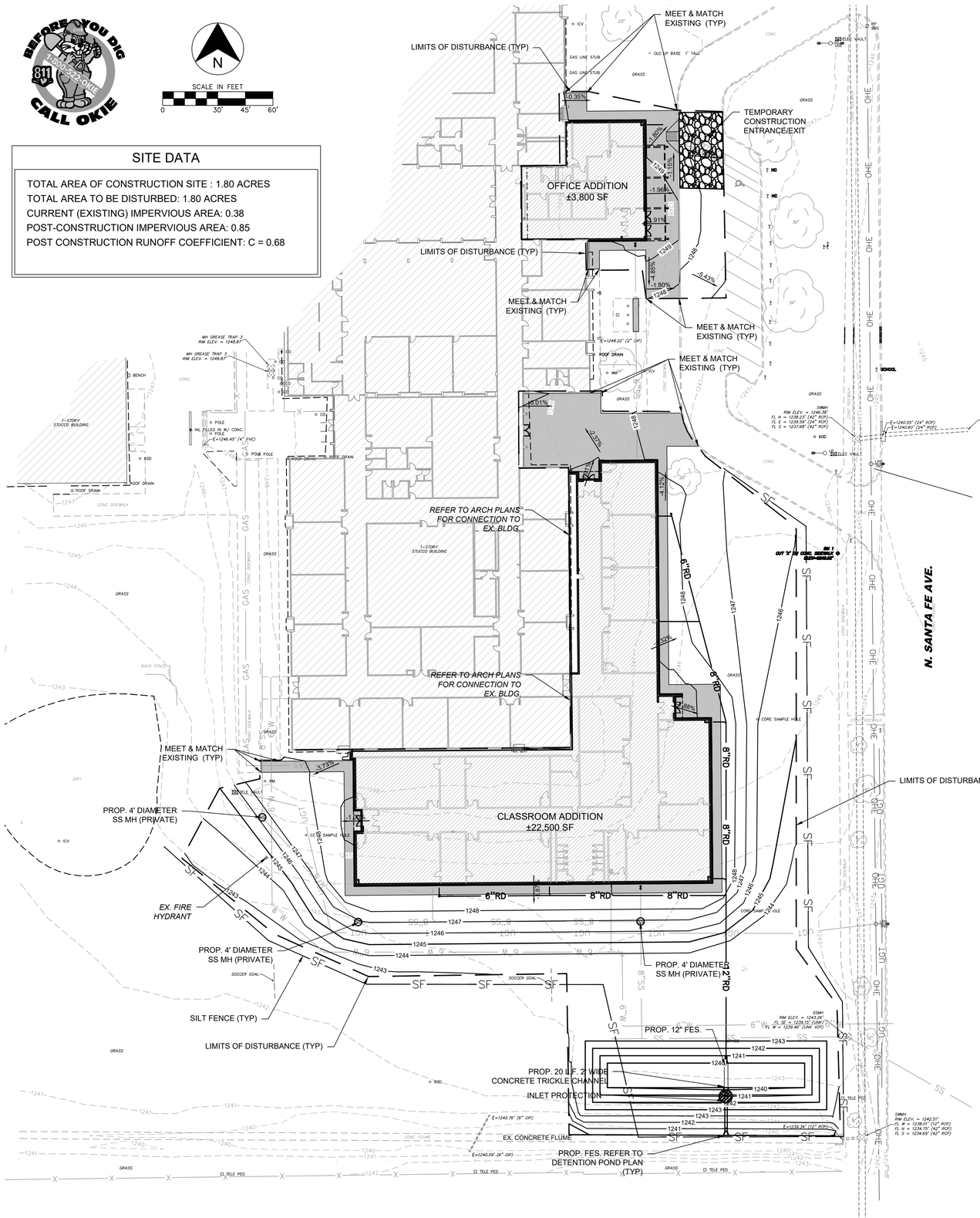

EROSION CONTROL NOTES

A. SEDIMENT BASINS ARE ATTRACTIVE TO CHILDREN AND CAN BE VERY DANGEROUS. IN ALL CASES, LOCAL ORDINANCES AND REGULATIONS REGARDING HEALTH AND SAFETY MUST BE ADHERED TO.

B. ALL CONTRACTORS AND SUBCONTRACTORS INVOLVED WITH STORM WATER POLLUTION PREVENTION SHALL OBTAIN A COPY OF THE STORM WATER POLLUTION PREVENTION PLAN AND THE STATE OF OKLAHOMA NATIONAL POLLUTANT DISCHARGE ELIMINATION SYSTEM GENERAL PERMIT (NPDES PERMIT) AND BECOME FAMILIAR WITH THEIR CONTENTS.

C. ALL TEMPORARY EROSION AND SEDIMENT CONTROL MEASURES SHALL BE DISPOSED OF WITHIN 30 DAYS AFTER FINAL STABILIZATION. FINAL STABILIZATION HAS OCCURRED WHEN ALL SOIL DISTURBING ACTIVITIES ARE COMPLETED AND A UNIFORM PERENNIAL VEGETATIVE COVER WITH A DENSITY OF 70% OF THE COVER FOR UNPAVED AREAS AND AREAS NOT COVERED BY PERMANENT STRUCTURES HAS BEEN EMPLOYED.

D. BEST MANAGEMENT PRACTICES (BMP'S) AND CONTROLS SHALL CONFORM TO FEDERAL, STATE, OR LOCAL REQUIREMENTS OR MANUAL OF PRACTICE, AS APPLICABLE CONTRACTOR SHALL IMPLEMENT ADDITIONAL CONTROLS AS DIRECTED BY PERMITTING AGENCY OR OWNER.

E. CONTRACTOR SHALL MINIMIZE CLEARING TO THE MAXIMUM EXTENT PRACTICAL OR AS REQUIRED BY THE GENERAL PERMIT.

F. GENERAL CONTRACTOR SHALL DENOTE ON PLAN THE TEMPORARY PARKING AND STORAGE AREA WHICH SHALL ALSO BE USED AS THE EQUIPMENT MAINTENANCE AND CLEANING AREA, EMPLOYEE PARKING AREA, AND AREA FOR LOCATING PORTABLE FACILITIES, OFFICE TRAILERS, AND TOILET FACILITIES.

G. ALL WASH WATER (CONCRETE TRUCKS, VEHICLE CLEANING, EQUIPMENT CLEANING, ETC.) SHALL BE DETAINED AND PROPERLY TREATED OR DISPOSED.

H. SUFFICIENT OIL AND GREASE ABSORBING MATERIALS AND FLOTATION BOOMS SHALL BE MAINTAINED ON SITE OR READILY AVAILABLE TO CONTAIN AND CLEAN-UP FUEL OR CHEMICAL SPILLS AND LEAKS.

I. DUST ON THE SITE SHALL BE CONTROLLED. THE USE OF MOTOR OILS AND OTHER PETROLEUM BASED OR TOXIC LIQUIDS FOR DUST SUPPRESSION OPERATIONS IS PROHIBITED.

J. RUBBISH, TRASH, GARBAGE, LITTER, OR OTHER SUCH MATERIALS SHALL BE DEPOSITED INTO SEALED CONTAINERS. MATERIALS SHALL BE PREVENTED FROM LEAVING THE PREMISES THROUGH THE ACTION OF WIND OR STORMWATER DISCHARGE INTO DRAINAGE DITCHES OR WATERS OF THE STATE.

K. ALL STORM WATER POLLUTION PREVENTION MEASURES PRESENTED ON THIS PLAN, AND IN THE STORM WATER POLLUTION PREVENTION PLAN, SHALL BE INITIATED AS SOON AS PRACTICABLE.

L. DISTURBED PORTIONS OF THE SITE WHERE CONSTRUCTION ACTIVITY HAS STOPPED FOR AT LEAST 14 DAYS, SHALL BE TEMPORARILY SEEDED. THESE AREAS SHALL BE SEEDED NO LATER THAN 14 DAYS FROM THE LAST CONSTRUCTION ACTIVITY OCCURRING IN THESE AREAS.

M. DISTURBED PORTIONS OF THE SITE WHERE CONSTRUCTION ACTIVITY HAS PERMANENTLY STOPPED SHALL BE PERMANENTLY SEEDED. THESE AREAS SHALL BE SEEDED NO LATER THAN 14 DAYS AFTER THE LAST CONSTRUCTION ACTIVITY OCCURRING IN THESE AREAS. REFER TO THE GRADING PLAN AND/OR LANDSCAPE PLAN.

N. IF THE ACTION OF VEHICLES TRAVELING OVER THE GRAVEL CONSTRUCTION ENTRANCES IS NOT SUFFICIENT TO REMOVE THE MAJORITY OF DIRT OR MUD, THEN THE TIRES MUST BE WASHED BEFORE THE VEHICLES ENTER A PUBLIC ROAD. IF WASHING IS USED, PROVISIONS MUST BE MADE TO INTERCEPT THE WASH WATER AND TRAP THE SEDIMENT BEFORE IT IS CARRIED OFF THE SITE.

O. ALL MATERIALS SPILLED, DROPPED, WASHED, OR TRACKED FROM VEHICLES ONTO ROADWAYS OR INTO STORM DRAINS MUST BE REMOVED IMMEDIATELY.

P. CONTRACTORS OR SUBCONTRACTORS WILL BE RESPONSIBLE FOR REMOVING SEDIMENT IN THE DETENTION POND AND ANY SEDIMENT THAT MAY HAVE COLLECTED IN THE STORM SEWER DRAINAGE SYSTEMS IN CONJUNCTION WITH THE STABILIZATION OF THE SITE.

Q. ON-SITE & OFFSITE SOIL STOCKPILE AND BORROW AREAS SHALL BE PROTECTED FROM EROSION AND SEDIMENTATION THROUGH IMPLEMENTATION OF BEST MANAGEMENT PRACTICES. STOCKPILE AND BORROW AREA LOCATIONS SHALL BE NOTED ON THE SITE PLAN AND PERMITTED IN ACCORDANCE WITH GENERAL PERMIT REQUIREMENTS.

R. SLOPES SHALL BE LEFT IN A ROUGHENED CONDITION DURING THE GRADING PHASE TO REDUCE RUNOFF VELOCITIES AND EROSION.

S. DUE TO THE GRADE CHANGES DURING THE DEVELOPMENT OF THE PROJECT, THE CONTRACTOR SHALL BE RESPONSIBLE FOR ADJUSTING THE EROSION CONTROL MEASURES (SILT FENCES, STRAW BALES, ETC.) TO PREVENT EROSION.

T. ALL CONSTRUCTION SHALL BE STABILIZED AT THE END OF EACH WORKING DAY, THIS INCLUDES BACKFILLING OF TRENCHES FOR UTILITY CONSTRUCTION AND PLACEMENT OF GRAVEL OR BITUMINOUS PAVING FOR ROAD CONSTRUCTION.

U. A 3' STRIP OF SOD SHALL BE PLACED ALONG THE EDGE OF ALL PAVING TO ACT AS A SEDIMENT BUFFER AND AID IN THE ESTABLISHMENT OF VEGETATION.

LEGEND

- BOUNDARY LINE
- RIGHT OF WAY LINE
- EASEMENT LINE
- EXISTING CONCRETE CURB AND GUTTER
- PROPOSED CONCRETE CURB AND GUTTER
- PROPOSED FIRE LANE STRIPING
- OHE — OVERHEAD ELECTRIC
- UGE — UNDERGROUND ELECTRIC
- GAS — GAS LINE
- UGT — UNDERGROUND TELEPHONE
- FO — UNDERGROUND FIBER OPTIC
- SS — SANITARY SEWER
- 8"W — WATERLINE
- BENCHMARK
- FIRE HYDRANT
- WATER VALVE
- EX. WATER METER PIT
- EX. WATER METER
- PROP. WATER METER
- EX. SPRINKLER VALVE
- EX. AUTO SPRINKLER
- EX. ELECT. PEDESTAL
- EX. ELECT. TRANSFORMER
- EX. ELECT. METER
- PROP. ELECT. METER
- EX. AIR CONDITIONER
- EX. SIGNAGE
- EX. LIGHT POLE
- PROP. LIGHT POLE
- EX. BOLLARD
- EX. POWER POLE
- PROP. POWER POLE
- EX. TELEPHONE PED.
- EX. TELEPHONE MANHOLE
- EX. TRAFFIC SIGNAL LIGHT
- EX. TRAFFIC CONTROL BOX
- EX. FLAG POLE
- EX. YARD LIGHT
- EX. GREASE TRAP
- EX. SS MANHOLE
- PROP. SS MANHOLE
- EX. GAS METER
- PROP. GAS METER
- EX. ELECT. MANHOLE
- EX. STORM MANHOLE
- PROP. INLETS (SEE GRADING PLAN FOR TYPE)
- LIMITS OF DISTURBANCE
- SF — SILT FENCE
- TD — TEMPORARY DIVERSION DIKE
- SODDING
- INLET PROTECTION
- CW — CONCRETE WASHOUT AREA

SEQUENCE OF CONSTRUCTION

PHASE 1

1. A PRE-CONSTRUCTION MEETING SHALL BE HELD BY THE GENERAL CONTRACTOR'S MANAGER, AND THE OPERATOR'S ENGINEER PRIOR TO LAND DISTURBING ACTIVITIES.
2. PREPARE AND PULL ALL NECESSARY PERMITS.
3. CONSTRUCT TEMPORARY CONSTRUCTION EXITS AT LOCATIONS SHOWN ON THE SWPPP PLANS AND PREPARE TEMPORARY PARKING AND STORAGE AREA. UPON IMPLEMENTATION AND INSTALLATION OF THE FOLLOWING AREAS: TRAILER, PARKING, LAY DOWN, PORTA-POTTY, WELL WASH, CONCRETE WASHOUT, MASONS AREA, FUEL AND MATERIAL STORAGE CONTAINERS, SOLID WASTE CONTAINERS, ETC., DENOTE THEM ON THE SITE MAPS IMMEDIATELY AND NOTE ANY CHANGE IN THE LOCATIONS AS THEY OCCUR THROUGHOUT THE CONSTRUCTION PROCESS.
4. CONSTRUCT THE SILT FENCES ON THE SITE. HALT ALL ACTIVITIES AND CONTACT THE CIVIL ENGINEERING CONSULTANT TO PERFORM INSPECTION AND CERTIFICATION OF BMP'S. GENERAL CONTRACTOR SHALL SCHEDULE AND CONDUCT STORMWATER PRE-CONSTRUCTION MEETING WITH ENGINEER AND ALL GROUND-DISTURBING CONTRACTORS BEFORE PROCEEDING WITH CONSTRUCTION.
5. INSTALL PUBLIC WATER, SEWER AND BOX CULVERT
6. DEMO, CLEAR AND GRUB THE SITE.
7. BEGIN GRADING THE SITE.
8. START CONSTRUCTION OF BUILDING PAD AND STRUCTURES.
9. DISTURBED AREAS OF THE SITE WHERE CONSTRUCTION ACTIVITY HAS CEASED FOR MORE THAN 14 DAYS SHALL BE TEMPORARILY SEEDED AND WATERED.

PHASE 2

1. INSTALL UTILITIES, UNDER DRAINS, STORM SEWERS, CURB AND GUTTERS.
2. INSTALL INLET PROTECTION DEVICES.
3. INSTALL RIP RAP AROUND OUTLET STRUCTURES.
4. FINALIZE PAVEMENT SUBGRADE PREPARATION.
5. INSTALL BASE MATERIAL AS REQUIRED FOR PAVEMENT.
6. PAVE LOT.
7. REMOVE TEMPORARY CONSTRUCTION EXITS ONLY PRIOR TO PAVEMENT CONSTRUCTION IN THESE AREAS. (THESE AREAS TO BE PAVED LAST)
8. DISTURBED AREAS OF THE SITE WHERE CONSTRUCTION ACTIVITY HAS CEASED FOR MORE THAN 14 DAYS SHALL BE TEMPORARILY SEEDED AND WATERED.
9. FINE GRADE AND INSTALL PERMANENT SEEDING AND PLANTINGS.
10. REMOVE ALL TEMPORARY EROSION AND SEDIMENT CONTROLS DEVISED. (ONLY IF SITE IS STABILIZED)
11. REMOVE INLET PROTECTIONS AROUND INLETS AND MANHOLES NO MORE THAN 48 HOURS PRIOR TO PLACING STABILIZED BASE COURSE.

CEDAR CREEK
ENGINEERING • PLANNING • CONSULTING
P.O. Box 14534 Oklahoma City, OK 73113
405-778-3385
www.cedarcreekinc.com
OK CA 5864
EXP. 06/30/24

LOCATION MAP:

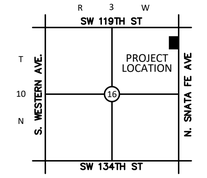

NOT TO SCALE

PROJECT:

HIGHLAND WEST JR. HIGH

901 N. SANTA FE
MOORE, OK

PROJECT NUMBER: 23069
DRAWING DATE: 09.25.23
ISSUE DATE: 09.25.23

SEAL:

LICENSED PROFESSIONAL ENGINEER
ANDREW WILSON
24273
OKLAHOMA
09.25.23

SUBMITTAL:

PERMIT SET

REVISIONS:

MARK	DATE	DESCRIPTION

THESE PLANS AND DRAWINGS ARE NOT TO BE REPRODUCED, CHANGED OR COPIED IN ANY FORM OR MANNER WHATSOEVER WITHOUT FIRST OBTAINING THE WRITTEN PERMISSION AND CONSENT OF CEDAR CREEK CONSULTING INC. THIS SHEET IS NOT TO BE USED FOR CONSTRUCTION UNLESS THE ISSUE DATE IN THE TITLE BLOCK COINCIDES WITH OR POST DATES THE DRAWING DATE. ANY CHANGES MADE FROM THESE PLANS WITHOUT CONSENT OF CEDAR CREEK CONSULTING INC. ARE UNAUTHORIZED, AND SHALL RELIEVE CEDAR CREEK CONSULTING OF RESPONSIBILITY FOR ALL CONSEQUENCES ARRIVING OUT OF SUCH CHANGES.

DRAWING TITLE:

EROSION CONTROL PLAN

SHEET:

C5.00

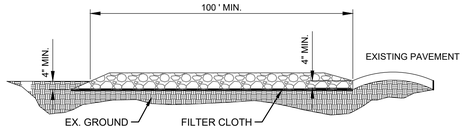

SIDE ELEVATION

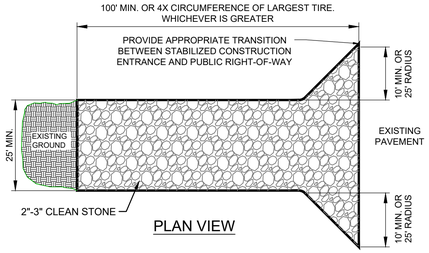

PLAN VIEW

NOTES:

1. STONE - USE COARSE AGGREGATE (2 - 3 INCH STONE)
2. LENGTH - AS EFFECTIVE, BUT NOT LESS THAN 100 FEET.
3. THICKNESS - NOT LESS THAN EIGHT (8) INCHES.
4. WIDTH - NOT LESS THAN FULL WIDTH OF ALL POINTS OF INGRESS OR EGRESS.
5. WASHING - WHEN NECESSARY, WHEELS SHALL BE CLEANED TO REMOVE SEDIMENT PRIOR TO ENTRANCE ONTO PUBLIC RIGHT-OF-WAY. WHEN WASHING IS REQUIRED, IT SHALL BE DONE ON AN AREA STABILIZED WITH CRUSHED STONE WHICH DRAINS INTO AN APPROVED SEDIMENT TRAP OR SEDIMENT BASIN. ALL SEDIMENT SHALL BE PREVENTED FROM ENTERING ANY STORM DRAIN, DITCH, OR WATERCOURSE THROUGH USE OF SAND BAGS, GRAVEL, BOARDS OR OTHER APPROVED METHODS.
6. MAINTENANCE - THE ENTRANCE SHALL BE MAINTAINED IN A CONDITION WHICH WILL PREVENT TRACKING OR FLOWING OF SEDIMENT ONTO PUBLIC RIGHT-OF-WAY. THIS MAY REQUIRE PERIODIC TOP DRESSING WITH ADDITIONAL STONE AS CONDITIONS DEMAND AND REPAIR AND/OR CLEANOUT OF ANY MEASURES USED TO TRAP SEDIMENT. ALL SEDIMENT SPILLED, DROPPED, WASHED OR TRACKED ONTO PUBLIC RIGHTS-OF-WAY MUST BE REMOVED IMMEDIATELY.
7. 12' X 24' METAL GRATE MAY BE USED. GRATE SHALL BE 25' AWAY FROM PAVEMENT AND APPROPRIATE SEDIMENT CONTROL TRAPPING DEVICE SHALL BE USED AT GRATE OUTLET POINT.

STABILIZED CONSTRUCTION ENTRANCE

NOT TO SCALE

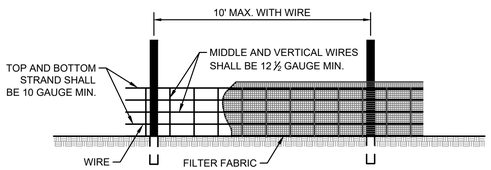

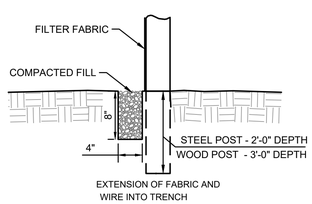

NOTES:

1. WIRE SHALL BE A MINIMUM OF 32" IN WIDTH AND SHALL HAVE A MINIMUM OF 6 LINE WIRES WITH 12" STAY SPACING.
2. FILTER FABRIC SHALL BE A MINIMUM OF 36" IN WIDTH AND SHALL BE FASTENED ADEQUATELY TO THE WIRE.
3. STEEL POST SHALL BE 5'-0" IN HEIGHT AND BE OF THE SELF-FASTENER ANGLE STEEL TYPE.
4. WOOD POST SHALL BE 6'-0" IN HEIGHT AND 3" IN DIAMETER.

SILT FENCE DETAIL

NOT TO SCALE

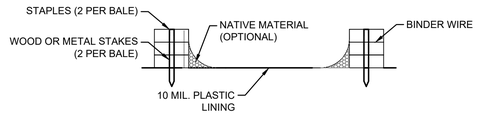

SECTION B-B

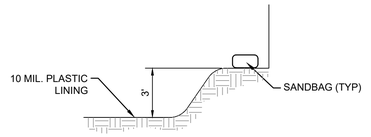

SECTION A-A

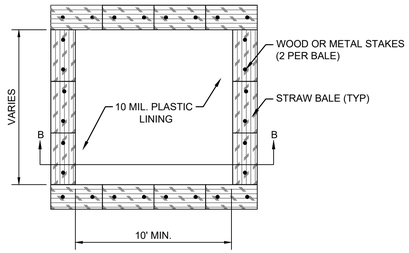

TYPE 'ABOVE GRADE' WITH STRAW BALES

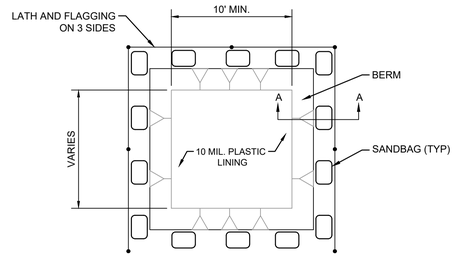

TYPE 'BELOW GRADE'

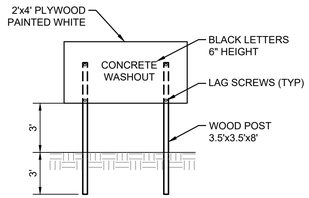

CONCRETE WASHOUT SIGN DETAIL

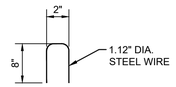

STAPLE DETAIL

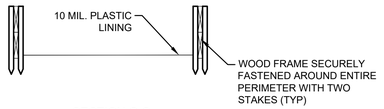

SECTION C-C

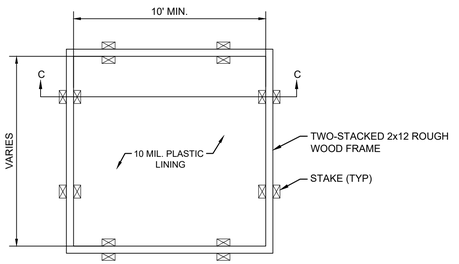

TYPE 'ABOVE GRADE' WITH WOOD PLANKS

NOTES:

1. ACTUAL LAYOUT TO BE DETERMINED IN THE FIELD.
2. A CONCRETE WASHOUT SIGN SHALL BE INSTALLED WITHIN 30' OF THE TEMPORARY CONCRETE WASHOUT FACILITY
3. MATERIALS USED TO CONSTRUCT TEMPORARY CONCRETE WASHOUT FACILITIES SHALL BE REMOVED FROM THE SITE OF THE WORK AND DISPOSED OF OR RECYCLED.
4. HOLES, DEPRESSIONS OR OTHER GROUND DISTURBANCE CAUSE BY THE REMOVAL OF THE TEMPORARY CONCRETE WASHOUT FACILITIES SHALL BE BACKFILLED, REPAIRED AND STABILIZED TO PREVENT EROSION.

CONCRETE WASHOUT DETAIL

NOT TO SCALE

CEDAR CREEK
ENGINEERING • PLANNING • CONSULTING
P.O. Box 14534 Oklahoma City, OK 73113
405-778-3385
www.cedarcreekinc.com
OK CA 5864
EXP. 06/30/24

LOCATION MAP:

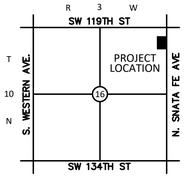

NOT TO SCALE

PROJECT:

HIGHLAND WEST JR. HIGH

901 N. SANTA FE
MOORE, OK

PROJECT NUMBER:	23069
DRAWING DATE:	09.25.23
ISSUE DATE:	09.25.23

SEAL:

SUBMITTAL:

PERMIT SET

REVISIONS:

MARK	DATE	DESCRIPTION

THESE PLANS AND DRAWINGS ARE NOT TO BE REPRODUCED, CHANGED OR COPIED IN ANY FORM OR MANNER WHATSOEVER WITHOUT FIRST OBTAINING THE WRITTEN PERMISSION AND CONSENT OF CEDAR CREEK CONSULTING INC. THIS SHEET IS NOT TO BE USED FOR CONSTRUCTION UNLESS THE ISSUE DATE IN THE TITLE BLOCK COINCIDES WITH OR POST DATES THE DRAWING DATE. ANY CHANGES MADE FROM THESE PLANS WITHOUT CONSENT OF CEDAR CREEK CONSULTING INC. ARE UNAUTHORIZED, AND SHALL RELIEVE CEDAR CREEK CONSULTING OF RESPONSIBILITY FOR ALL CONSEQUENCES ARRIVING OUT OF SUCH CHANGES.

DRAWING TITLE:

EROSION CONTROL DETAILS

SHEET:

C5.01

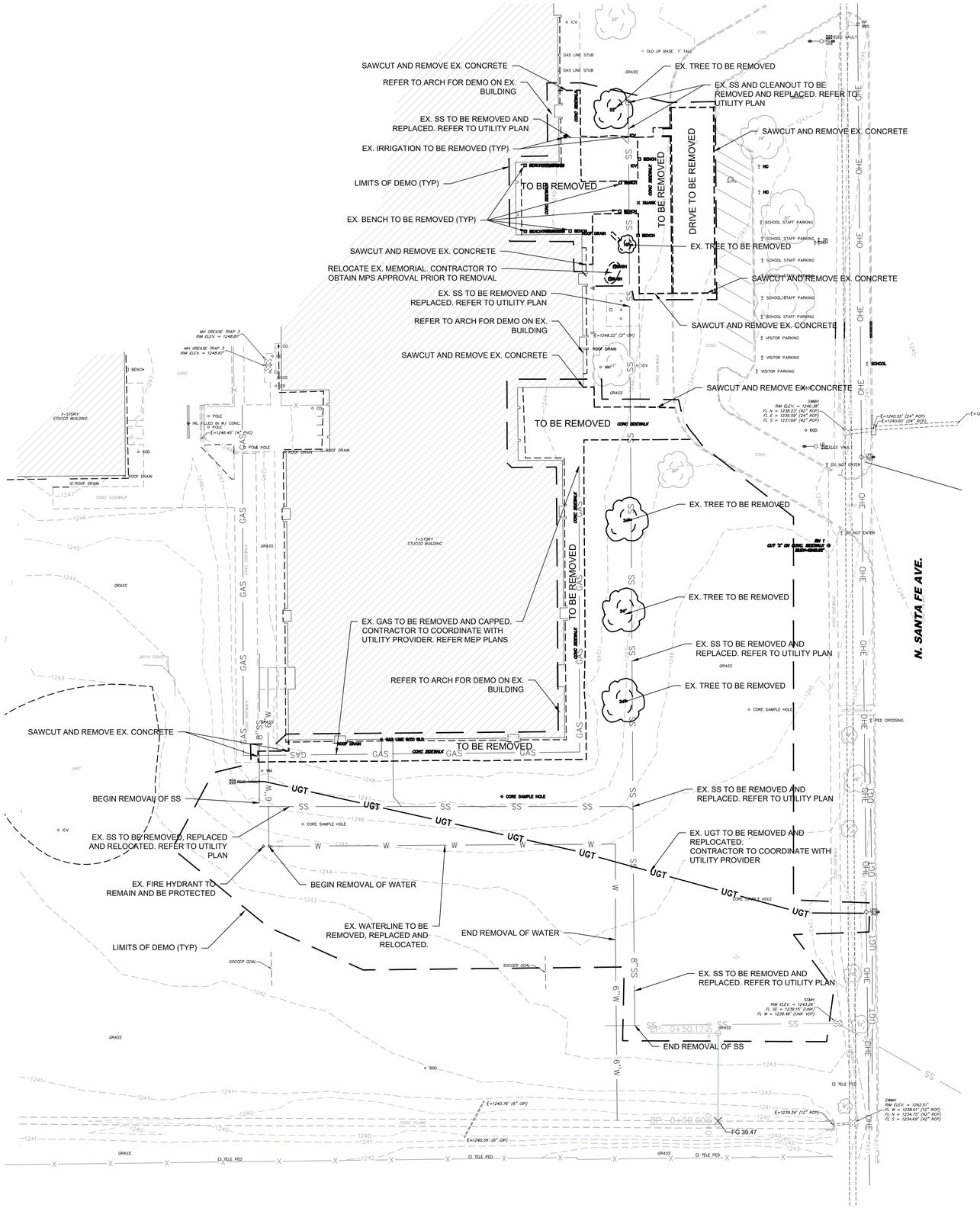

LEGEND

- BOUNDARY LINE
- RIGHT OF WAY LINE
- EASEMENT LINE
- EXISTING CONCRETE CURB AND GUTTER
- PROPOSED CONCRETE CURB AND GUTTER
- PROPOSED FIRE LANE STRIPING
- OHE — OVERHEAD ELECTRIC
- UGE — UNDERGROUND ELECTRIC
- GAS — GAS LINE
- UGT — UNDERGROUND TELEPHONE
- FO — UNDERGROUND FIBER OPTIC
- SS — SANITARY SEWER
- 8"W — WATERLINE
- BENCHMARK

- FIRE HYDRANT
- WATER VALVE
- EX. WATER METER PIT
- EX. WATER METER
- PROP. WATER METER
- EX. SPRINKLER VALVE
- EX. AUTO SPRINKLER
- EX. ELECT. PEDESTAL
- EX. ELECT. TRANSFORMER
- EX. ELECT. METER
- PROP. ELECT. METER
- EX. AIR CONDITIONER
- EX. SIGNAGE
- EX. LIGHT POLE
- PROP. LIGHT POLE
- EX. BOLLARD
- EX. POWER POLE
- PROP. POWER POLE
- EX. TELEPHONE PED.
- EX. TELEPHONE MANHOLE
- EX. TRAFFIC SIGNAL LIGHT
- EX. TRAFFIC CONTROL BOX
- EX. FLAG POLE
- EX. YARD LIGHT
- EX. GREASE TRAP
- EX. SS MANHOLE
- PROP. SS MANHOLE
- EX. GAS METER
- PROP. GAS METER
- EX. ELECT. MANHOLE
- EX. STORM MANHOLE

NOTE:CONTRACTOR SHALL ENSURE THAT PEDESTRIAN AND FIRE ACCESS TO THE EXISTING BUILDING IS PROVIDED AT ALL TIMES DURING DEMOLITION AND CONSTRUCTION.

NOTE: CONTRACTOR SHALL BE RESPONSIBLE TO REPAIR ANY DAMAGE TO EXISTING PAVEMENT DUE TO CONSTRUCTION.

NOTE: CONTRACTOR SHALL BE RESPONSIBLE FOR MAINTAINING SAFE EGRESS AND INGRESS TO AND FROM SITE ALL ALL TIMES, AS WELL AS ALONG PUBLIC STREETS.

DEMOLITION NOTES

1. THE CONTRACTOR SHALL ABIDE BY ALL FEDERAL, STATE AND LOCAL CODES FOR THE DEMOLITION AND DISPOSAL OF ALL MATERIALS.
2. CEDAR CREEK CONSULTING, INC. SHALL NOT BE LIABLE FOR ANY DEMOLITION PROCEDURES, SCHEDULING, AND DISPOSING OF ANY MATERIALS.
3. IT SHALL BE THE RESPONSIBILITY OF THE CONTRACTOR TO MAKE SURE THAT THE PROPERTY IS NOT DAMAGED AND IS ACCESSIBLE AT ALL TIMES, AND THAT CONSTRUCTION DOES NOT CREATE ANY HARDSHIP TO LAND OWNERS.
4. THE CONTRACTOR IS RESPONSIBLE FOR THE DEMOLITION, REMOVAL, AND DISPOSING IN A LOCATION APPROVED BY ALL GOVERNING AUTHORITIES, OF ALL STRUCTURES, PADS, WALLS, FLUMES, FOUNDATIONS, PARKING, DRIVES, DRAINAGE, UTILITIES, ETC., SUCH THAT THE IMPROVEMENTS SHOWN ON THE REMAINING PLANS CAN BE CONSTRUCTED. ALL FACILITIES TO BE REMOVED SHALL BE UNDERCUT TO SUITABLE MATERIAL AND BROUGHT TO GRADE WITH SUITABLE COMPACTED FILL MATERIAL PER THE SPECIFICATIONS.
5. THE CONTRACTOR SHALL COORDINATE WITH RESPECTIVE UTILITY COMPANIES PRIOR TO THE DISCONNECTION, REMOVAL AND RELOCATION OF ALL UTILITIES. THE CONTRACTOR SHALL COORDINATE WITH THE UTILITY COMPANY CONCERNING PORTIONS OF WORK WHICH MAY BE PERFORMED BY THE UTILITY COMPANY'S FORCES AND ANY FEES WHICH ARE TO BE PAID TO THE UTILITY COMPANY FOR SERVICES. THE CONTRACT IS RESPONSIBLE FOR PAYING ALL FEES AND CHARGES.
6. THE CONTRACTOR IS RESPONSIBLE FOR REMOVING EXISTING IRRIGATION SYSTEM IN THE AREAS OF PROPOSED IMPROVEMENTS. THE CONTRACTOR SHALL CAP THE EXISTING IRRIGATION SYSTEM TO REMAIN SUCH THAT THE REMAINING SYSTEM SHALL CONTINUE TO FUNCTION PROPERLY.
7. THE LOCATIONS OF ALL EXISTING UTILITIES SHOWN ON THIS PLAN HAVE BEEN DETERMINED FROM THE BEST INFORMATION AVAILABLE AND ARE GIVEN FOR THE CONVENIENCE OF THE CONTRACTOR. THE ENGINEER ASSUMES NO RESPONSIBILITY FOR THEIR ACCURACY. PRIOR TO THE START OF ANY DEMOLITION ACTIVITY, THE CONTRACTOR SHALL NOTIFY THE UTILITY COMPANIES FOR ONSITE LOCATIONS OF EXISTING UTILITIES.
8. ALL EXISTING SEWERS, PIPING AND UTILITIES SHOWN ARE NOT TO BE INTERPRETED AS THE EXACT LOCATION, OR AS THE ONLY OBSTACLES THAT MAY OCCUR ON THE SITE. VERIFY EXISTING CONDITIONS AND PROCEED WITH CAUTION AROUND ANY ANTICIPATED FEATURES. GIVE NOTICE TO ALL UTILITY COMPANIES REGARDING DESTRUCTION AND REMOVAL OF ALL SERVICE LINES AND CAP ALL LINES BEFORE PROCEEDING WITH WORK. UTILITIES DETERMINED TO BE ABANDONED AND LEFT IN PLACE SHALL BE GROUTED IF UNDER BUILDINGS.
9. ELECTRICAL, TELEPHONE, CABLE, WATER, FIBER OPTIC CABLE AND/OR GAS LINES NEEDING TO BE REMOVED OR RELOCATED SHALL BE COORDINATED WITH THE AFFECTED UTILITY COMPANY. ADEQUATE TIME SHALL BE PROVIDED FOR RELOCATION AND CLOSE COORDINATION WITH THE UTILITY COMPANY IS NECESSARY TO PROVIDE A SMOOTH TRANSITION IN UTILITY SERVICE.
10. THE CONTRACTOR MUST PROTECT THE PUBLIC AT ALL TIMES WITH FENCING, BARRICADES, ENCLOSURES, ETC.
11. ALL EROSION CONTROL DEVICES ARE TO BE INSTALLED PRIOR TO DEMOLITION.
12. THE CONTRACTOR MAY LIMIT SAW-CUT AND PAVEMENT REMOVAL TO ONLY THOSE AREAS WHERE IT IS REQUIRED AS SHOWN ON THE CONSTRUCTION PLANS BUT IF ANY DAMAGE IS INCURRED ON ANY OF THE SURROUNDING PAVEMENT, ETC., THE CONTRACTOR SHALL BE RESPONSIBLE FOR ITS REMOVAL AND REPAIR.
13. THE CONTRACTOR SHALL MAINTAIN ALL EXISTING PARKING, SIDEWALKS, DRIVES, ETC. CLEAR AND FREE FROM ANY CONSTRUCTION ACTIVITY INCLUDING FENCING AND CONSTRUCTION TRAILER AND/OR MATERIAL TO ENSURE EASY AND SAFE PEDESTRIAN AND VEHICULAR TRAFFIC TO AND FROM THE SITE.
14. THE CONTRACTOR SHALL COORDINATE WATERMAIN WORK WITH THE FIRE DEPARTMENT, THE CITY UTILITY DEPARTMENT TO PLAN PROPOSED IMPROVEMENTS AND TO ENSURE ADEQUATE FIRE PROTECTION IS CONSTANTLY AVAILABLE TO THE SITE THROUGHOUT THIS SPECIFIC WORK AND THROUGH ALL PHASES OF CONSTRUCTION. CONTRACTOR WILL BE RESPONSIBLE FOR ARRANGING/PROVIDING ANY REQUIRED WATERMAIN SHUT-OFFS WITH THE CITY/COUNTY DURING CONSTRUCTION. ANY COSTS ASSOCIATED WITH WATERMAIN SHUT-OFFS WILL BE THE RESPONSIBILITY OF THE CONTRACTOR AND NO EXTRA COMPENSATION WILL BE PROVIDED.
15. DAMAGE TO ALL EXISTING CONDITIONS TO REMAIN WILL BE REPLACED AT CONTRACTOR'S EXPENSE. REPAIRS SHALL RESTORE DAMAGED ITEMS TO EQUAL OR BETTER THAN EXISTING CONDITIONS. CONTRACTOR IS RESPONSIBLE FOR DOCUMENTING ALL EXISTING DAMAGE AND NOTIFYING THE CONSTRUCTION MANAGER PRIOR TO CONSTRUCTION START.
16. ALL TRENCHES AND/OR EXCAVATED AREAS SHALL BE FILLED /TESTED IN ACCORDANCE WITH THE GEOTECHNICAL ENGINEERING REPORT.
17. IF SEPTIC TANKS ARE FOUND PRESENT WITHIN THE LIMITS OF DISTURBANCE, THEY SHALL BE DISPOSED OF IN ACCORDANCE WITH LOCAL, STATE AND FEDERAL LAWS.
18. IF THE CONTRACTOR FINDS ANY UNDERGROUND TANKS ON SITE, THEY SHALL CONTACT THE ENGINEER IMMEDIATELY.
19. ALL WELLS SHALL BE CAPPED AND CLOSED IN ACCORDANCE WITH APPLICABLE STATE AND FEDERAL LAWS.
20. ALL ITEMS WITHIN LIMITS OF DEMOLITION SHALL BE REMOVED UNLESS OTHERWISE NOTED.
21. CONTRACTOR SHALL BEGIN CONSTRUCTION OF ANY LIGHT POLE BASES FOR RELOCATED LIGHT FIXTURES AND RELOCATION OF ELECTRICAL SYSTEM AS SOON AS DEMOLITION BEGINS. CONTRACTOR SHALL BE AWARE THAT INTERRUPTION OF POWER TO ANY LIGHT POLES OR SIGNS SHALL NOT EXCEED 24 HOURS.
22. CONTRACTOR IS TO VERIFY LOCATION OF EXISTING IRRIGATION SYSTEM, VALVE BOXES, CONTROL BOXES, BACKFLOW PREVENTION DEVICES AND LIGHTING CONDUIT. IF DAMAGED THEY MUST BE REPAIRED AT CONTRACTOR'S EXPENSE.

N

SCALE IN FEET
0 30' 45' 60'

BEFORE YOU DIG 1-800-522-6543 811 CALL OKIE

CEDAR CREEK
ENGINEERING • PLANNING • CONSULTING
P.O. Box 14534 Oklahoma City, OK 73113
405-778-3385
www.cedarcreekinc.com
OK CA 5864
EXP. 06/30/24

LOCATION MAP:

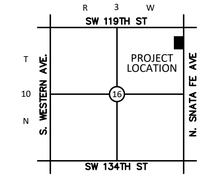

NOT TO SCALE

PROJECT:

HIGHLAND WEST JR. HIGH

MOORE, OK

PROJECT NUMBER: 23069
DRAWING DATE: 07.31.23
ISSUE DATE: 07.31.23

SEAL:

LICENSED PROFESSIONAL ENGINEER ANDREW WILSON 24273 OKLAHOMA 07.31.23

SUBMITTAL:

PERMIT SET

REVISIONS:

MARK	DATE	DESCRIPTION

THESE PLANS AND DRAWINGS ARE NOT TO BE REPRODUCED, CHANGED OR COPIED IN ANY FORM OR MANNER WHATSOEVER WITHOUT FIRST OBTAINING THE WRITTEN PERMISSION AND CONSENT OF CEDAR CREEK CONSULTING INC. THIS SHEET IS NOT TO BE USED FOR CONSTRUCTION UNLESS THE ISSUE DATE IN THE TITLE BLOCK COINCIDES WITH OR POST DATES THE DRAWING DATE. ANY CHANGES MADE FROM THESE PLANS WITHOUT CONSENT OF CEDAR CREEK CONSULTING INC. ARE UNAUTHORIZED, AND SHALL RELIEVE CEDAR CREEK CONSULTING OF RESPONSIBILITY FOR ALL CONSEQUENCES ARRIVING OUT OF SUCH CHANGES.

DRAWING TITLE:

DEMOLITION PLAN

SHEET:

C1.00

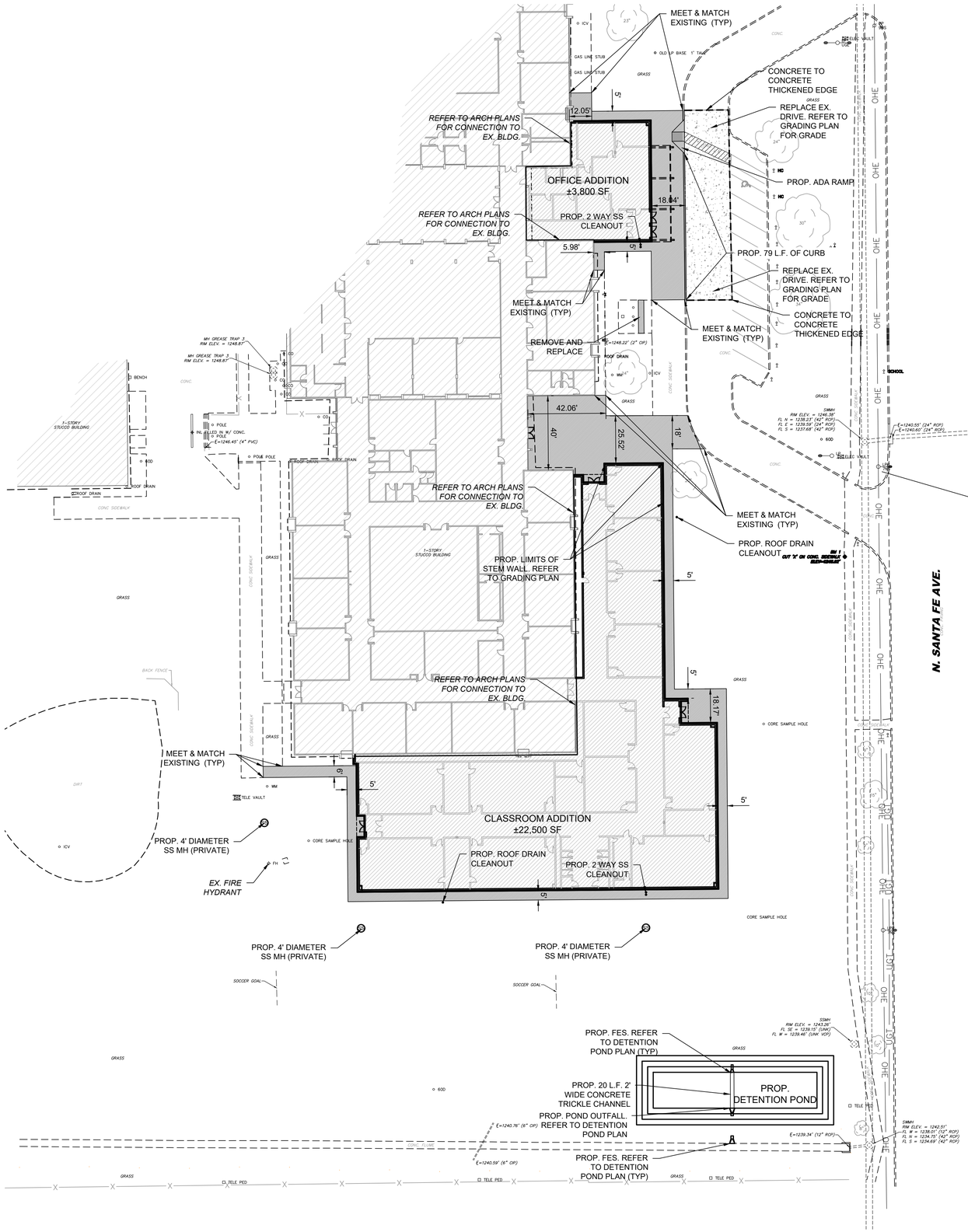

LEGEND

- BOUNDARY LINE
- RIGHT OF WAY LINE
- EASEMENT LINE
- EXISTING CONCRETE CURB AND GUTTER
- PROPOSED CONCRETE CURB AND GUTTER
- PROPOSED FIRE LANE STRIPING
- OHE — OVERHEAD ELECTRIC
- UGE — UNDERGROUND ELECTRIC
- GAS — GAS LINE
- UGT — UNDERGROUND TELEPHONE
- FO — UNDERGROUND FIBER OPTIC
- SS — SANITARY SEWER
- 8"W — WATERLINE
- BENCHMARK

- FIRE HYDRANT
- WATER VALVE
- EX. WATER METER PIT
- EX. WATER METER
- PROP. WATER METER
- EX. SPRINKLER VALVE
- EX. AUTO SPRINKLER
- EX. ELECT. PEDESTAL
- EX. ELECT. TRANSFORMER
- EX. ELECT. METER
- PROP. ELECT. METER
- EX. AIR CONDITIONER
- EX. SIGNAGE
- EX. LIGHT POLE
- PROP. LIGHT POLE
- EX. BOLLARD
- EX. POWER POLE
- PROP. POWER POLE
- EX. TELEPHONE PED.
- EX. TELEPHONE MANHOLE
- EX. TRAFFIC SIGNAL LIGHT
- EX. TRAFFIC CONTROL BOX
- EX. FLAG POLE
- EX. YARD LIGHT
- EX. GREASE TRAP
- EX. SS MANHOLE
- PROP. SS MANHOLE
- EX. GAS METER
- PROP. GAS METER
- EX. ELECT. MANHOLE
- EX. STORM MANHOLE
- PROP. INLETS (SEE GRADING PLAN FOR TYPE)
- VERTICAL SEPARATION REQUIREMENT

NOTE: CONTRACTOR IS RESPONSIBLE FOR ENSURING THAT ALL PROPOSED WORK MEETS ADA REQUIREMENTS. REFER TO www.access-board.gov/ada-aba/ada-standards-doj.cfm

NOTE: CONTRACTOR SHALL CONSTRUCT AND INSTALL WHEEL STOPS, SIGNS, AND ADA RAMPS AT ALL HANDICAP SPACES.

SITE NOTES

A. CONTRACTOR SHALL REFER TO THE CONSTRUCTION DOCUMENTS INCLUDING BUT NOT LIMITED TO THE WRITTEN SPECIFICATIONS, CONSTRUCTION DRAWINGS, STORM WATER POLLUTION PLAN, AND GEOTECHNICAL REPORT.

B. ALL CONSTRUCTION SHALL BE IN STRICT ACCORDANCE WITH THE OWNERS DESIGN GUIDELINES AND SPECIFICATIONS, AND WHERE APPLICABLE SHALL MEET THE REQUIREMENTS OF THE GOVERNING/PERMITTING AUTHORITY HAVING JURISDICTION.

C. CONTRACTOR IS RESPONSIBLE FOR THEIR OWN HORIZONTAL AND VERTICAL CONTROL, REFERENCE POINTS AND CONSTRUCTION STAKING AS INCIDENTAL TO THE PROJECT.

D. THE CONTRACTOR SHALL FIELD VERIFY EXISTING ELEVATIONS/PROPERTY LINES/UTILITIES/DRAINAGE PRIOR TO CONSTRUCTION START.

E. ALL WORK NOT CLASSIFIED AS A CONTRACT PAY ITEM SHALL BE CONSIDERED AS INCIDENTAL AND THE COST THEREOF SHALL BE INCLUDED IN THE UNIT PRICE BID FOR ITEMS WHICH ARE CLASSIFIED FOR PAYMENT.

F. CONTRACTOR SHALL REFER TO THE ARCHITECTURAL AND MEP PLANS AND SPECIFICATIONS BEING A PART OF THE CONSTRUCTION DOCUMENTS FOR THE EXACT LOCATIONS AND DIMENSIONS OF ENTRY, EXIT PORCHES, PRECISE BUILDING DIMENSIONS, EXACT BUILDING UTILITY ENTRANCE, AND DOWNSPOUT LOCATIONS/SPECIFICATIONS/DETAILS.

G. ALL DIMENSIONS SHOWN ARE TO THE FACE OF CURB (FC) UNLESS OTHERWISE NOTED.

H. PARKING LOT STRIPING SHALL BE 4" WIDE AND WHITE IN COLOR. HANDICAP PARKING STALLS STRIPING AND SIGNAGE SHALL BE IN STRICT ACCORDANCE WITH FEDERAL, STATE, AND LOCAL REQUIREMENTS.

I. UNLESS OTHERWISE NOTED ALL RADII SHALL BE 3'.

J. BUILDING DIMENSIONS ARE TO OUTSIDE OF MASONRY, UNLESS OTHERWISE SHOWN.

K. CONTRACTOR SHALL REFER TO THE ARCHITECTURAL PLANS AND SPECIFICATIONS FOR ACTUAL LOCATION AND DETAILS OF ALL UTILITY ENTRANCES. CONTRACTOR SHALL COORDINATE INSTALLATION OF UTILITIES IN SUCH A MANNER AS TO AVOID CONFLICTS AND ASSURE PROPER DEPTHS ARE ACHIEVED, AS WELL AS COORDINATED WITH ANY UTILITY COMPANIES FOR APPROVED LOCATIONS AND SCHEDULING OF TIE-INS/CONNECTIONS TO THEIR FACILITIES.

L. REFER TO ARCHITECTURE PLANS FOR SITE LIGHTING AND ELECTRICAL CONDUIT PLANS. POLE LOCATIONS ARE SHOWN ON THIS SHEET FOR REFERENCE ONLY. IT IS THE CONTRACTOR'S RESPONSIBILITY TO IDENTIFY AND ADJUST ANY CONSTRUCTED CONFLICTS WITH UNDERGROUND UTILITIES, SIDEWALKS, ETC.

M. CHECK ARCHITECTURAL PLANS FOR EXACT DOWNSPOUT LOCATIONS.

N. CONTRACTOR SHALL REFER TO LANDSCAPE AND IRRIGATION PLAN FOR LOCATION AND CONSTRUCTION DETAILS OF LANDSCAPING AND IRRIGATION.

CEDAR CREEK
ENGINEERING • PLANNING • CONSULTING
P.O. Box 14534 Oklahoma City, OK 73113
405-778-3385
www.cedarcreekinc.com
OK CA 5864
EXP. 06/30/24

LOCATION MAP:

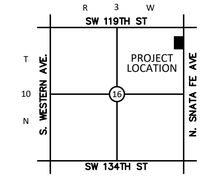

NOT TO SCALE

PROJECT:

HIGHLAND WEST JR. HIGH

MOORE, OK

PROJECT NUMBER: 23069
DRAWING DATE: 07.31.23
ISSUE DATE: 07.31.23

SEAL:

LICENSED PROFESSIONAL ENGINEER
ANDREW WILSON
24273
OKLAHOMA
7-31-23

SUBMITTAL:

PERMIT SET

REVISIONS:

MARK	DATE	DESCRIPTION

THESE PLANS AND DRAWINGS ARE NOT TO BE REPRODUCED, CHANGED OR COPIED IN ANY FORM OR MANNER WHATSOEVER WITHOUT FIRST OBTAINING THE WRITTEN PERMISSION AND CONSENT OF CEDAR CREEK CONSULTING INC. THIS SHEET IS NOT TO BE USED FOR CONSTRUCTION UNLESS THE ISSUE DATE IN THE TITLE BLOCK COINCIDES WITH OR POST DATES THE DRAWING DATE. ANY CHANGES MADE FROM THESE PLANS WITHOUT CONSENT OF CEDAR CREEK CONSULTING INC. ARE UNAUTHORIZED, AND SHALL RELIEVE CEDAR CREEK CONSULTING OF RESPONSIBILITY FOR ALL CONSEQUENCES ARRIVING OUT OF SUCH CHANGES.

DRAWING TITLE:

SITE PLAN

SHEET:

C2.00

BEFORE YOU DIG 811 CALL OKIE

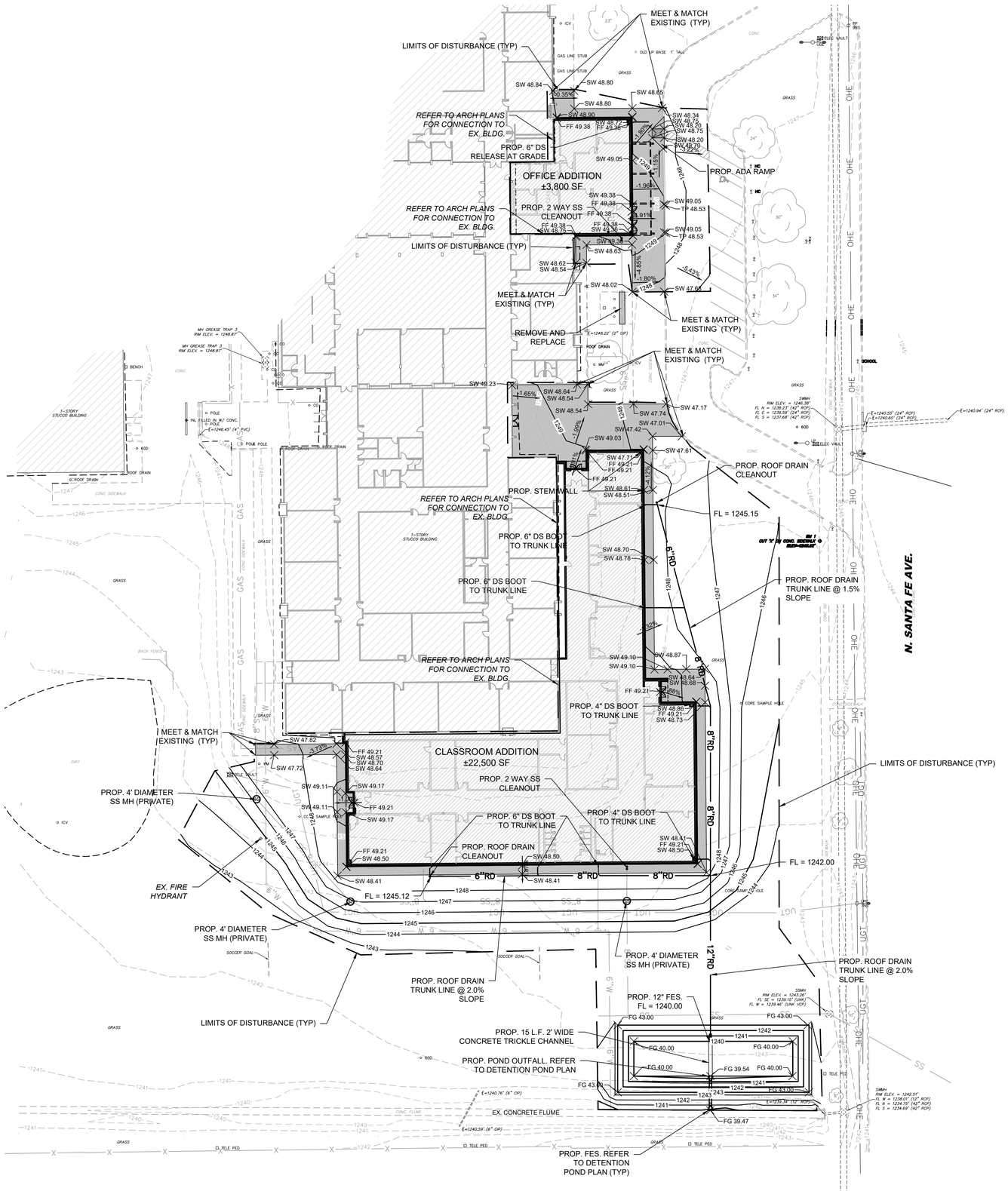

LEGEND

- BOUNDARY LINE
- RIGHT OF WAY LINE
- EASEMENT LINE
- EXISTING CONCRETE CURB AND GUTTER
- PROPOSED CONCRETE CURB AND GUTTER
- PROPOSED FIRE LANE STRIPING
- OHE — OVERHEAD ELECTRIC
- UGE — UNDERGROUND ELECTRIC
- GAS — GAS LINE
- UGT — UNDERGROUND TELEPHONE
- FO — UNDERGROUND FIBER OPTIC
- SS — SANITARY SEWER
- 8"W — WATERLINE
- BENCHMARK

- FIRE HYDRANT
- WATER VALVE
- EX. WATER METER PIT
- EX. WATER METER
- PROP. WATER METER
- EX. SPRINKLER VALVE
- EX. AUTO SPRINKLER
- EX. ELECT. PEDESTAL
- EX. ELECT. TRANSFORMER
- EX. ELECT. METER
- PROP. ELECT. METER
- EX. AIR CONDITIONER
- EX. SIGNAGE
- EX. LIGHT POLE
- PROP. LIGHT POLE
- EX. BOLLARD
- EX. POWER POLE
- PROP. POWER POLE
- EX. TELEPHONE PED.
- EX. TELEPHONE MANHOLE
- EX. TRAFFIC SIGNAL LIGHT
- EX. TRAFFIC CONTROL BOX
- EX. FLAG POLE
- EX. YARD LIGHT
- EX. GREASE TRAP
- EX. SS MANHOLE
- PROP. SS MANHOLE
- EX. GAS METER
- PROP. GAS METER
- EX. ELECT. MANHOLE
- EX. STORM MANHOLE

PROP. INLETS (SEE GRADING PLAN FOR TYPE)

VS — VERTICAL SEPARATION REQUIREMENT

GRADING NOTES

A. CONTRACTOR SHALL REFER TO THE SITE SPECIFIC GEOTECHNICAL REPORT FOR EXISTING SOIL CONDITIONS, CONSIDERATIONS, AND RECOMMENDATIONS.

B. CONTRACTOR SHALL REFER TO THE CONSTRUCTION DOCUMENTS INCLUDING BUT NOT LIMITED TO THE WRITTEN SPECIFICATIONS, CONSTRUCTION DRAWINGS, STORM WATER POLLUTION PLAN, AND GEOTECHNICAL REPORT.

C. CONTRACTOR IS RESPONSIBLE FOR THEIR OWN HORIZONTAL AND VERTICAL CONTROL, REFERENCE POINTS AND CONSTRUCTION STAKING AS INCIDENTAL TO THE PROJECT.

D. THE CONTRACTOR SHALL FIELD VERIFY EXISTING ELEVATIONS/PROPERTY LINES/UTILITIES/DRAINAGE PRIOR TO CONSTRUCTION START.

E. ALL SITE EXCAVATION SHALL BE CONSIDERED UNCLASSIFIED EXCAVATION.

F. GENERAL CONTRACTOR TO PROVIDE A UNIT PRICE FOR REMOVAL AND REPLACEMENT OF SOILS ON THIS SITE SHOULD REMOVAL BE REQUIRED.

G. ALL WORK NOT CLASSIFIED AS A CONTRACT PAY ITEM SHALL BE CONSIDERED AS INCIDENTAL AND THE COST THEREOF SHALL BE INCLUDED IN THE UNIT PRICE BID FOR ITEMS WHICH ARE CLASSIFIED FOR PAYMENT.

H. CONTRACTOR SHALL PROVIDE FINAL GRADES THAT DO NOT OBSTRUCT ANY UTILITY ACCESS AND PROVIDE A SMOOTH TRANSITION TO MEET AND MATCH EXISTING GRADES ON ALL SIDES.

I. ADA ROUTES ARE NOT TO EXCEED 1:20 RUNNING SLOPE AND 2% CROSS SLOPE. HANDICAP PARKING AND ACCESS AISLES SHALL NOT EXCEED 2% IN ANY DIRECTION.

J. ALL NATURAL GROUND SLOPES SHALL NOT EXCEED 3:1. PAVING SLOPES SHALL NOT EXCEED 8%.

K. CONTRACTOR SHALL ENSURE THAT ALL NECESSARY EARTH DISTURBING PERMITS HAVE BEEN ACQUIRED AND MEET THE CONDITIONS/REQUIREMENTS SET FORTH IN THE PERMITS PRIOR TO CONSTRUCTION.

L. CONTRACTOR IS REQUIRED TO CALL ONE CALL AS WELL AS THE APPROPRIATE UTILITY COMPANY AT LEAST 48 HOURS BEFORE ANY EXCAVATION/CONSTRUCTION ACTIVITIES TAKE PLACE. IT SHALL BE THE RESPONSIBILITY OF THE CONTRACTOR TO RELOCATE ALL EXISTING UTILITIES WHICH ARE IN CONFLICT WITH PROPOSED IMPROVEMENTS.

M. THE CONTRACTOR SHALL GRADE SITE TO ENSURE ALL SURFACE WATER DRAINAGE IS AWAY FROM THE BUILDING AND PROVIDES POSITIVE DRAINAGE SO THAT NO STANDING/PONDING WATER TAKES PLACE ON SITE OR ON ADJACENT PROPERTIES.

N. ALL CONSTRUCTION SHALL BE IN STRICT ACCORDANCE WITH THE OWNERS DESIGN GUIDELINES AND SPECIFICATIONS, AND WHERE APPLICABLE SHALL MEET THE REQUIREMENTS OF THE GOVERNING/PERMITTING AUTHORITY HAVING JURISDICTION.

O. THE BUILDING SUBGRADE SHALL BE CONSTRUCTED TO INCLUDE A MINIMUM OF 10 FEET BEYOND THE BUILDING LIMITS AS SHOWN ON THE PLANS, OR AS DIRECTED BY THE OWNER.

P. REFERENCE ARCHITECTURAL AND STRUCTURAL DRAWINGS FOR REQUIRED FLOOR SLAB THICKNESS.

Q. THE BUILDING PAD SUBGRADE SHALL BE PREPARED IN STRICT ACCORDANCE WITH THE GEOTECHNICAL ENGINEERING STUDY AND THE CIVIL SPECIFICATIONS.

R. ESTABLISH FINAL SUBGRADE ELEVATIONS TO ALLOW FOR PAVEMENT/SLAB SECTIONS AS INDICATED ON THE PLANS.

S. IF CONFLICTS EXIST BETWEEN THE GEOTECHNICAL REPORT AND THE CONSTRUCTION DRAWINGS AND SPECIFICATIONS, THE MORE STRINGENT REQUIREMENTS SHALL APPLY.

SPOT ELEVATION LEGEND

- TC - TOP OF CURB
- G - GUTTER
- TP - TOP OF PAVEMENT
- HP - HIGH POINT
- LP - LOW POINT
- SW - SIDEWALK
- FF - FINISH FLOOR
- FG - FINAL GRADE
- TW - TOP OF WALL
- BW - BOTTOM OF WALL
- NOTE: BW IS BOTTOM OF WALL AT GRADE, NOT FOOTING

VS — VERTICAL SEPARATION REQUIREMENT

N

SCALE IN FEET
0 30' 45' 60'

BEFORE YOU DIG CALL OKIE 811

CEDAR CREEK
ENGINEERING • PLANNING • CONSULTING
P.O. Box 14534 Oklahoma City, OK 73113
405-778-3385
www.cedarcreekinc.com
OK CA 5864
EXP. 06/30/24

LOCATION MAP:

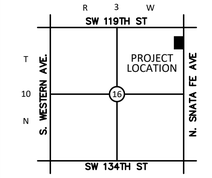

NOT TO SCALE

PROJECT:

HIGHLAND WEST JR. HIGH

MOORE, OK

PROJECT NUMBER: 23069
DRAWING DATE: 07.31.23
ISSUE DATE: 07.31.23

SEAL:

LICENSED PROFESSIONAL ENGINEER
ANDREW WILSON
24273
OKLAHOMA
7-31-23

SUBMITTAL:

PERMIT SET

REVISIONS:

MARK	DATE	DESCRIPTION

THESE PLANS AND DRAWINGS ARE NOT TO BE REPRODUCED, CHANGED OR COPIED IN ANY FORM OR MANNER WHATSOEVER WITHOUT FIRST OBTAINING THE WRITTEN PERMISSION AND CONSENT OF CEDAR CREEK CONSULTING INC. THIS SHEET IS NOT TO BE USED FOR CONSTRUCTION UNLESS THE ISSUE DATE IN THE TITLE BLOCK COINCIDES WITH OR POST DATES THE DRAWING DATE. ANY CHANGES MADE FROM THESE PLANS WITHOUT CONSENT OF CEDAR CREEK CONSULTING INC. ARE UNAUTHORIZED, AND SHALL RELIEVE CEDAR CREEK CONSULTING OF RESPONSIBILITY FOR ALL CONSEQUENCES ARRIVING OUT OF SUCH CHANGES.

DRAWING TITLE:

GRADING PLAN

SHEET:

C3.00

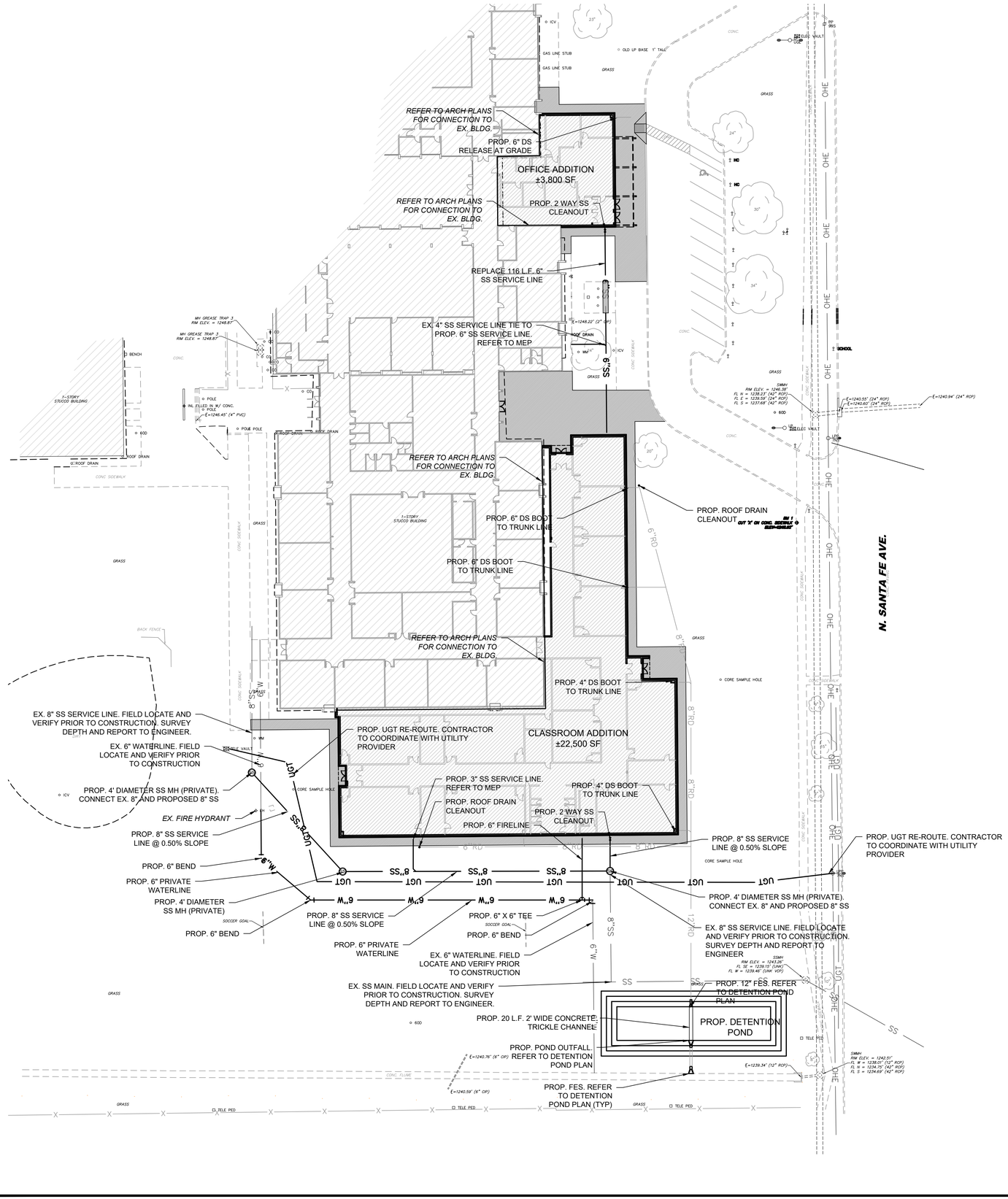

LEGEND

- BOUNDARY LINE
- RIGHT OF WAY LINE
- EASEMENT LINE
- EXISTING CONCRETE CURB AND GUTTER
- PROPOSED CONCRETE CURB AND GUTTER
- PROPOSED FIRE LANE STRIPING
- OHE — OVERHEAD ELECTRIC
- UGE — UNDERGROUND ELECTRIC
- GAS — GAS LINE
- UGT — UNDERGROUND TELEPHONE
- FO — UNDERGROUND FIBER OPTIC
- SS — SANITARY SEWER
- 8"W — WATERLINE
- BENCHMARK

- FIRE HYDRANT
- WATER VALVE
- EX. WATER METER PIT
- EX. WATER METER
- PROP. WATER METER
- EX. SPRINKLER VALVE
- EX. AUTO SPRINKLER
- EX. ELECT. PEDESTAL
- EX. ELECT. TRANSFORMER
- EX. ELECT. METER
- PROP. ELECT. METER
- EX. AIR CONDITIONER
- EX. SIGNAGE
- EX. LIGHT POLE
- PROP. LIGHT POLE
- EX. BOLLARD
- EX. POWER POLE
- PROP. POWER POLE
- EX. TELEPHONE PED.
- EX. TELEPHONE MANHOLE
- EX. TRAFFIC SIGNAL LIGHT
- EX. TRAFFIC CONTROL BOX
- EX. FLAG POLE
- EX. YARD LIGHT
- EX. GREASE TRAP
- EX. SS MANHOLE
- PROP. SS MANHOLE
- EX. GAS METER
- PROP. GAS METER
- EX. ELECT. MANHOLE
- EX. STORM MANHOLE

PROP. INLETS (SEE GRADING PLAN FOR TYPE)

VERTICAL SEPARATION REQUIREMENT

UTILITY NOTES

A. CONTRACTOR SHALL REFER TO THE CONSTRUCTION DOCUMENTS INCLUDING BUT NOT LIMITED TO THE WRITTEN SPECIFICATIONS, CONSTRUCTION DRAWINGS, STORM WATER POLLUTION PLAN, AND GEOTECHNICAL REPORT.

B. ALL CONSTRUCTION SHALL BE IN STRICT ACCORDANCE WITH THE OWNERS DESIGN GUIDELINES AND SPECIFICATIONS, AND WHERE APPLICABLE SHALL MEET THE REQUIREMENTS OF THE GOVERNING/PERMITTING AUTHORITY HAVING JURISDICTION.

C. CONTRACTOR IS RESPONSIBLE FOR THEIR OWN HORIZONTAL AND VERTICAL CONTROL, REFERENCE POINTS AND CONSTRUCTION STAKING AS INCIDENTAL TO THE PROJECT.

D. THE CONTRACTOR SHALL FIELD VERIFY EXISTING ELEVATIONS/PROPERTY LINES/UTILITIES/DRAINAGE PRIOR TO CONSTRUCTION START.

E. ALL WORK NOT CLASSIFIED AS A CONTRACT PAY ITEM SHALL BE CONSIDERED AS INCIDENTAL AND THE COST THEREOF SHALL BE INCLUDED IN THE UNIT PRICE BID FOR ITEMS WHICH ARE CLASSIFIED FOR PAYMENT.

F. CONTRACTOR SHALL REFER TO THE ARCHITECTURAL AND MEP PLANS AND SPECIFICATIONS BEING A PART OF THE CONSTRUCTION DOCUMENTS FOR THE EXACT LOCATIONS AND DIMENSIONS OF ENTRY, EXIT PORCHES, PRECISE BUILDING DIMENSIONS, EXACT BUILDING UTILITY ENTRANCE, AND DOWNSPOUT LOCATIONS/SPECIFICATIONS/DETAILS.

G. REFER TO ARCHITECTURE PLANS FOR SITE LIGHTING/LIGHT POLE BASES AND ELECTRICAL CONDUIT PLACEMENT AND SPECIFICATIONS. POLE LOCATIONS ARE SHOWN ON THIS SHEET FOR REFERENCE ONLY. IT IS THE CONTRACTOR'S RESPONSIBILITY TO IDENTIFY AND ADJUST ANY CONSTRUCTED CONFLICTS WITH UNDERGROUND UTILITIES, SIDEWALKS, ETC.

H. CONTRACTOR IS REQUIRED TO CALL ONE CALL AS WELL AS THE APPROPRIATE UTILITY COMPANY AT LEAST 48 HOURS BEFORE ANY EXCAVATION/CONSTRUCTION ACTIVITIES TAKE PLACE. IT SHALL BE THE RESPONSIBILITY OF THE CONTRACTOR TO RELOCATE ALL EXISTING UTILITIES WHICH ARE IN CONFLICT WITH PROPOSED IMPROVEMENTS.

I. CONTRACTOR SHALL ENSURE ALL CONSTRUCTED UTILITIES MEET THE MINIMUM SEPARATION AND COVER REQUIREMENTS SET FORTH BY THE PROVIDER, FEDERAL/STATE/LOCAL REGULATIONS, OR SPECIFICATIONS. IN THE EVENT THERE IS A CONFLICT THE MOST STRINGENT SHALL APPLY.

J. GENERAL CONTRACTOR TO PROVIDE 2'X2'X6" THICK CONCRETE APRON AT ALL CLEANOUTS, VALVES AND METERS OUTSIDE OF BUILDING.

K. GENERAL CONTRACTOR SHALL BE RESPONSIBLE FOR ALL TAP AND TIE ON FEES REQUIRED, AS WELL AS COST OF UNDERGROUND SERVICE CONNECTIONS TO THE BUILDINGS.

L. THRUST BLOCKING SHALL BE PROVIDED AT ALL BENDS, TEES, AND FIRE HYDRANTS.

M. DIMENSIONS SHOWN ARE TO CENTERLINE OF PIPE OR FITTING.

N. ALL WATER AND SANITARY SEWER LEADS TO BUILDING SHALL END 5' OUTSIDE THE BUILDING LIMITS AS SHOWN ON PLAN AND SHALL BE PROVIDED WITH A TEMPORARY PLUG AT END.

O. ALL FIRE HYDRANTS SHALL BE PROVIDED WITH AN APPROVED GATE VALVE A MAXIMUM OF 5'(UNLESS OTHERWISE SPECIFIED BY CITY OFFICIAL) FROM HYDRANT.

P. CONTRACTOR SHALL COMPLY COMPLETELY WITH THE LATEST STANDARDS OF OSHA DIRECTIVES OR ANY OTHER AGENCY HAVING JURISDICTION FOR EXCAVATION AND TRENCHING PROCEDURES. THE CONTRACTOR SHALL USE SUPPORT SYSTEMS, SLOPING, BENCHING AND OTHER MEANS OF PROTECTION. THIS IS TO INCLUDE, BUT NOT LIMITED FOR ACCESS AND EGRESS FROM ALL EXCAVATION AND TRENCHING. CONTRACTOR IS RESPONSIBLE FOR COMPLYING WITH PERFORMANCE CRITERIA AS REQUIRED BY OSHA.

Q. REFER TO FIRE PROTECTION SHEETS FOR LOCATION AND DETAIL OF FIRE LINE LEAD IN. FIRE LINE SHALL BE STUBBED UP 1' ABOVE FFE IN SPRINKLER ROOM.

R. REFER TO PLUMBING SHEETS FOR LOCATION AND DETAILS OF SEWER, DOMESTIC, AND IRRIGATION CONNECTIONS.

S. CONTRACTOR SHALL REFER TO IRRIGATION PLANS FOR ACTUAL LOCATION, SIZE, LENGTH AND DEPTH. TEMPORARILY PLUG BOTH ENDS. IRRIGATION CONTRACTOR WILL REMOVE TEMPORARY PLUGS, INSTALL LINES AND PROPERLY SEAL BOTH ENDS.

T. THE FIRE DEPARTMENT CONNECTION (FDC) SHALL BE LOCATED ON THE STREET SIDE OF ANY STRUCTURE. THE FDC SHALL BE LOCATED AND ARRANGED SO THAT THE HOSE LINES CAN BE READILY ATTACHED TO THE INLETS WITHOUT INTERFERENCE FROM OBJECTS.

U. IT IS THE CONTRACTOR'S RESPONSIBILITY TO COORDINATE THE EXTENSIONS OF ALL UTILITY SERVICE LINES TO THE MAIN UTILITY LINES.

V. ALL CONDUIT SHALL BE SCHEDULE 40 PVC, UNLESS OTHERWISE NOTED.

W. CONTRACTOR SHALL REFER TO LANDSCAPE AND IRRIGATION PLAN FOR LOCATION AND CONSTRUCTION DETAILS OF LANDSCAPING AND IRRIGATION.

N

SCALE IN FEET
0 30' 45' 60'

BEFORE YOU DIG 811 OKIE 1-800-522-6543 CALL OKIE

CEDAR CREEK
ENGINEERING • PLANNING • CONSULTING
P.O. Box 14534 Oklahoma City, OK 73113
405-778-3385
www.cedarcreekinc.com
OK CA 5864
EXP. 06/30/24

LOCATION MAP:

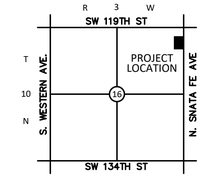

NOT TO SCALE

PROJECT:

HIGHLAND WEST JR. HIGH

MOORE, OK

PROJECT NUMBER: 23069
DRAWING DATE: 07.31.23
ISSUE DATE: 07.31.23

SEAL:

SUBMITTAL:

PERMIT SET

REVISIONS:

MARK	DATE	DESCRIPTION

THESE PLANS AND DRAWINGS ARE NOT TO BE REPRODUCED, CHANGED OR COPIED IN ANY FORM OR MANNER WHATSOEVER WITHOUT FIRST OBTAINING THE WRITTEN PERMISSION AND CONSENT OF CEDAR CREEK CONSULTING INC. THIS SHEET IS NOT TO BE USED FOR CONSTRUCTION UNLESS THE ISSUE DATE IN THE TITLE BLOCK COINCIDES WITH OR POST DATES THE DRAWING DATE. ANY CHANGES MADE FROM THESE PLANS WITHOUT CONSENT OF CEDAR CREEK CONSULTING INC. ARE UNAUTHORIZED, AND SHALL RELIEVE CEDAR CREEK CONSULTING OF RESPONSIBILITY FOR ALL CONSEQUENCES ARRIVING OUT OF SUCH CHANGES.

DRAWING TITLE:

UTILITY PLAN

SHEET:

C4.00

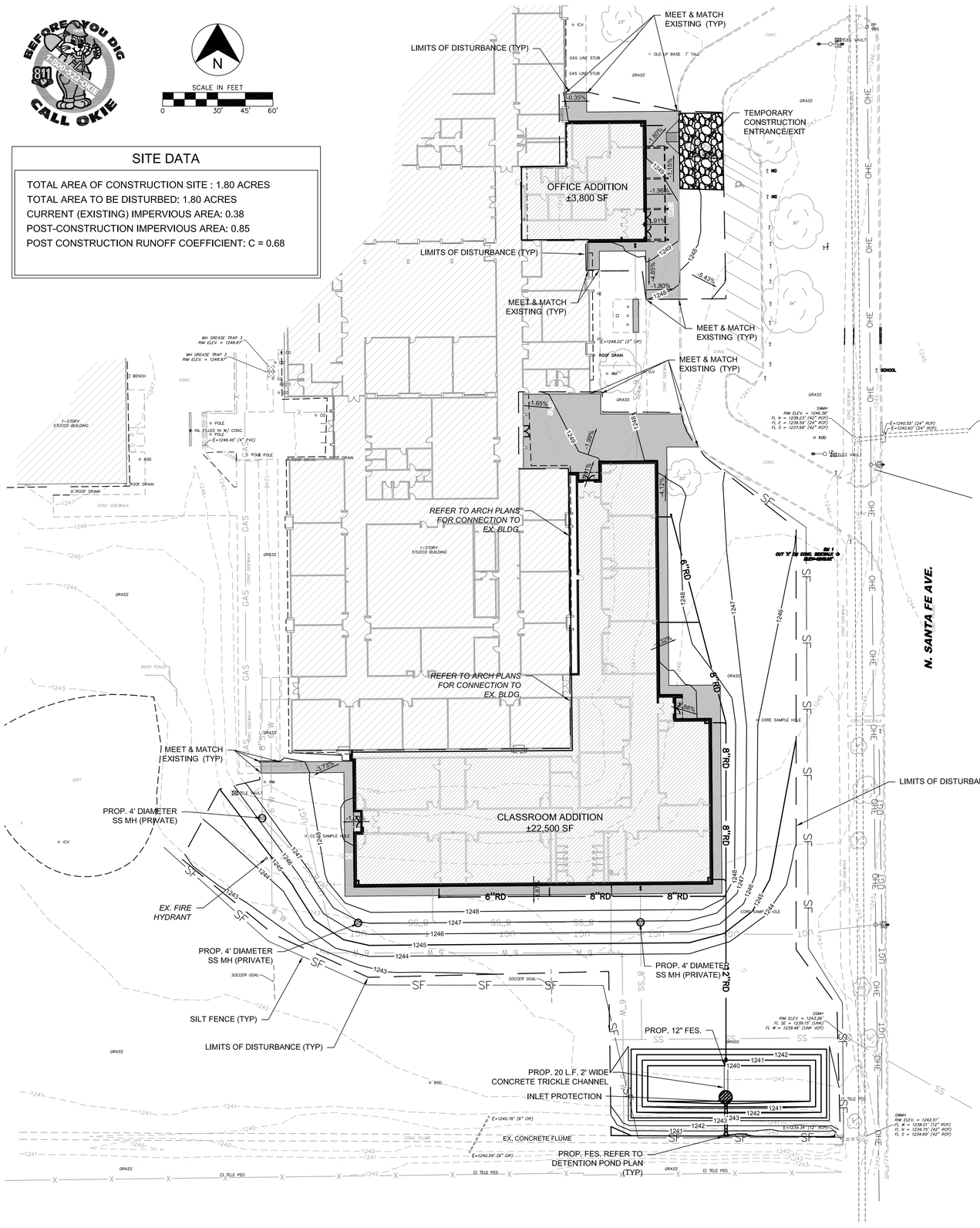

SITE DATA

TOTAL AREA OF CONSTRUCTION SITE : 1.80 ACRES
TOTAL AREA TO BE DISTURBED: 1.80 ACRES
CURRENT (EXISTING) IMPERVIOUS AREA: 0.38
POST-CONSTRUCTION IMPERVIOUS AREA: 0.85
POST CONSTRUCTION RUNOFF COEFFICIENT: C = 0.68

EROSION CONTROL NOTES

A. SEDIMENT BASINS ARE ATTRACTIVE TO CHILDREN AND CAN BE VERY DANGEROUS. IN ALL CASES, LOCAL ORDINANCES AND REGULATIONS REGARDING HEALTH AND SAFETY MUST BE ADHERED TO.

B. ALL CONTRACTORS AND SUBCONTRACTORS INVOLVED WITH STORM WATER POLLUTION PREVENTION SHALL OBTAIN A COPY OF THE STORM WATER POLLUTION PREVENTION PLAN AND THE STATE OF OKLAHOMA NATIONAL POLLUTANT DISCHARGE ELIMINATION SYSTEM GENERAL PERMIT (NPDES PERMIT) AND BECOME FAMILIAR WITH THEIR CONTENTS.

C. ALL TEMPORARY EROSION AND SEDIMENT CONTROL MEASURES SHALL BE DISPOSED OF WITHIN 30 DAYS AFTER FINAL STABILIZATION. FINAL STABILIZATION HAS OCCURRED WHEN ALL SOIL DISTURBING ACTIVITIES ARE COMPLETED AND A UNIFORM PERENNIAL VEGETATIVE COVER WITH A DENSITY OF 70% OF THE COVER FOR UNPAVED AREAS AND AREAS NOT COVERED BY PERMANENT STRUCTURES HAS BEEN EMPLOYED.

D. BEST MANAGEMENT PRACTICES (BMP'S) AND CONTROLS SHALL CONFORM TO FEDERAL, STATE, OR LOCAL REQUIREMENTS OR MANUAL OF PRACTICE, AS APPLICABLE CONTRACTOR SHALL IMPLEMENT ADDITIONAL CONTROLS AS DIRECTED BY PERMITTING AGENCY OR OWNER.

E. CONTRACTOR SHALL MINIMIZE CLEARING TO THE MAXIMUM EXTENT PRACTICAL OR AS REQUIRED BY THE GENERAL PERMIT.

F. GENERAL CONTRACTOR SHALL DENOTE ON PLAN THE TEMPORARY PARKING AND STORAGE AREA WHICH SHALL ALSO BE USED AS THE EQUIPMENT MAINTENANCE AND CLEANING AREA, EMPLOYEE PARKING AREA, AND AREA FOR LOCATING PORTABLE FACILITIES, OFFICE TRAILERS, AND TOILET FACILITIES.

G. ALL WASH WATER (CONCRETE TRUCKS, VEHICLE CLEANING, EQUIPMENT CLEANING, ETC.) SHALL BE DETAINED AND PROPERLY TREATED OR DISPOSED.

H. SUFFICIENT OIL AND GREASE ABSORBING MATERIALS AND FLOTATION BOOMS SHALL BE MAINTAINED ON SITE OR READILY AVAILABLE TO CONTAIN AND CLEAN-UP FUEL OR CHEMICAL SPILLS AND LEAKS.

I. DUST ON THE SITE SHALL BE CONTROLLED. THE USE OF MOTOR OILS AND OTHER PETROLEUM BASED OR TOXIC LIQUIDS FOR DUST SUPPRESSION OPERATIONS IS PROHIBITED.

J. RUBBISH, TRASH, GARBAGE, LITTER, OR OTHER SUCH MATERIALS SHALL BE DEPOSITED INTO SEALED CONTAINERS. MATERIALS SHALL BE PREVENTED FROM LEAVING THE PREMISES THROUGH THE ACTION OF WIND OR STORMWATER DISCHARGE INTO DRAINAGE DITCHES OR WATERS OF THE STATE.

K. ALL STORM WATER POLLUTION PREVENTION MEASURES PRESENTED ON THIS PLAN, AND IN THE STORM WATER POLLUTION PREVENTION PLAN, SHALL BE INITIATED AS SOON AS PRACTICABLE.

L. DISTURBED PORTIONS OF THE SITE WHERE CONSTRUCTION ACTIVITY HAS STOPPED FOR AT LEAST 14 DAYS, SHALL BE TEMPORARILY SEEDED. THESE AREAS SHALL BE SEEDED NO LATER THAN 14 DAYS FROM THE LAST CONSTRUCTION ACTIVITY OCCURRING IN THESE AREAS.

M. DISTURBED PORTIONS OF THE SITE WHERE CONSTRUCTION ACTIVITY HAS PERMANENTLY STOPPED SHALL BE PERMANENTLY SEEDED. THESE AREAS SHALL BE SEEDED NO LATER THAN 14 DAYS AFTER THE LAST CONSTRUCTION ACTIVITY OCCURRING IN THESE AREAS. REFER TO THE GRADING PLAN AND/OR LANDSCAPE PLAN.

N. IF THE ACTION OF VEHICLES TRAVELING OVER THE GRAVEL CONSTRUCTION ENTRANCES IS NOT SUFFICIENT TO REMOVE THE MAJORITY OF DIRT OR MUD, THEN THE TIRES MUST BE WASHED BEFORE THE VEHICLES ENTER A PUBLIC ROAD. IF WASHING IS USED, PROVISIONS MUST BE MADE TO INTERCEPT THE WASH WATER AND TRAP THE SEDIMENT BEFORE IT IS CARRIED OFF THE SITE.

O. ALL MATERIALS SPILLED, DROPPED, WASHED, OR TRACKED FROM VEHICLES ONTO ROADWAYS OR INTO STORM DRAINS MUST BE REMOVED IMMEDIATELY.

P. CONTRACTORS OR SUBCONTRACTORS WILL BE RESPONSIBLE FOR REMOVING SEDIMENT IN THE DETENTION POND AND ANY SEDIMENT THAT MAY HAVE COLLECTED IN THE STORM SEWER DRAINAGE SYSTEMS IN CONJUNCTION WITH THE STABILIZATION OF THE SITE.

Q. ON-SITE & OFFSITE SOIL STOCKPILE AND BORROW AREAS SHALL BE PROTECTED FROM EROSION AND SEDIMENTATION THROUGH IMPLEMENTATION OF BEST MANAGEMENT PRACTICES. STOCKPILE AND BORROW AREA LOCATIONS SHALL BE NOTED ON THE SITE PLAN AND PERMITTED IN ACCORDANCE WITH GENERAL PERMIT REQUIREMENTS.

R. SLOPES SHALL BE LEFT IN A ROUGHENED CONDITION DURING THE GRADING PHASE TO REDUCE RUNOFF VELOCITIES AND EROSION.

S. DUE TO THE GRADE CHANGES DURING THE DEVELOPMENT OF THE PROJECT, THE CONTRACTOR SHALL BE RESPONSIBLE FOR ADJUSTING THE EROSION CONTROL MEASURES (SILT FENCES, STRAW BALES, ETC.) TO PREVENT EROSION.

T. ALL CONSTRUCTION SHALL BE STABILIZED AT THE END OF EACH WORKING DAY, THIS INCLUDES BACKFILLING OF TRENCHES FOR UTILITY CONSTRUCTION AND PLACEMENT OF GRAVEL OR BITUMINOUS PAVING FOR ROAD CONSTRUCTION.

U. A 3' STRIP OF SOD SHALL BE PLACED ALONG THE EDGE OF ALL PAVING TO ACT AS A SEDIMENT BUFFER AND AID IN THE ESTABLISHMENT OF VEGETATION.

LEGEND

- BOUNDARY LINE
- RIGHT OF WAY LINE
- EASEMENT LINE
- EXISTING CONCRETE CURB AND GUTTER
- PROPOSED CONCRETE CURB AND GUTTER
- PROPOSED FIRE LANE STRIPING
- OHE — OVERHEAD ELECTRIC
- UGE — UNDERGROUND ELECTRIC
- GAS — GAS LINE
- UGT — UNDERGROUND TELEPHONE
- FO — UNDERGROUND FIBER OPTIC
- SS — SANITARY SEWER
- 8"W — WATERLINE
- BENCHMARK
- FIRE HYDRANT
- WATER VALVE
- EX. WATER METER PIT
- EX. WATER METER
- PROP. WATER METER
- EX. SPRINKLER VALVE
- EX. AUTO SPRINKLER
- EX. ELECT. PEDESTAL
- EX. ELECT. TRANSFORMER
- EX. ELECT. METER
- PROP. ELECT. METER
- EX. AIR CONDITIONER
- EX. SIGNAGE
- EX. LIGHT POLE
- PROP. LIGHT POLE
- EX. BOLLARD
- EX. POWER POLE
- PROP. POWER POLE
- EX. TELEPHONE PED.
- EX. TELEPHONE MANHOLE
- EX. TRAFFIC SIGNAL LIGHT
- EX. TRAFFIC CONTROL BOX
- EX. FLAG POLE
- EX. YARD LIGHT
- EX. GREASE TRAP
- EX. SS MANHOLE
- PROP. SS MANHOLE
- EX. GAS METER
- PROP. GAS METER
- EX. ELECT. MANHOLE
- EX. STORM MANHOLE
- PROP. INLETS (SEE GRADING PLAN FOR TYPE)
- LIMITS OF DISTURBANCE
- SF — SILT FENCE
- TD— —>> — TEMPORARY DIVERSION DIKE
- SODDING
- INLET PROTECTION
- CW — CONCRETE WASHOUT AREA

SEQUENCE OF CONSTRUCTION

PHASE 1

1. A PRE-CONSTRUCTION MEETING SHALL BE HELD BY THE GENERAL CONTRACTOR'S MANAGER, AND THE OPERATOR'S ENGINEER PRIOR TO LAND DISTURBING ACTIVITIES.
2. PREPARE AND PULL ALL NECESSARY PERMITS.
3. CONSTRUCT TEMPORARY CONSTRUCTION EXITS AT LOCATIONS SHOWN ON THE SWPPP PLANS AND PREPARE TEMPORARY PARKING AND STORAGE AREA. UPON IMPLEMENTATION AND INSTALLATION OF THE FOLLOWING AREAS: TRAILER, PARKING, LAY DOWN, PORTA-POTTY, WELL WASH, CONCRETE WASHOUT, MASONS AREA, FUEL AND MATERIAL STORAGE CONTAINERS, SOLID WASTE CONTAINERS, ETC., DENOTE THEM ON THE SITE MAPS IMMEDIATELY AND NOTE ANY CHANGE IN THE LOCATIONS AS THEY OCCUR THROUGHOUT THE CONSTRUCTION PROCESS.
4. CONSTRUCT THE SILT FENCES ON THE SITE. HALT ALL ACTIVITIES AND CONTACT THE CIVIL ENGINEERING CONSULTANT TO PERFORM INSPECTION AND CERTIFICATION OF BMP'S. GENERAL CONTRACTOR SHALL SCHEDULE AND CONDUCT STORMWATER PRE-CONSTRUCTION MEETING WITH ENGINEER AND ALL GROUND-DISTURBING CONTRACTORS BEFORE PROCEEDING WITH CONSTRUCTION.
5. INSTALL PUBLIC WATER, SEWER AND BOX CULVERT
6. DEMO, CLEAR AND GRUB THE SITE.
7. BEGIN GRADING THE SITE.
8. START CONSTRUCTION OF BUILDING PAD AND STRUCTURES.
9. DISTURBED AREAS OF THE SITE WHERE CONSTRUCTION ACTIVITY HAS CEASED FOR MORE THAN 14 DAYS SHALL BE TEMPORARILY SEEDED AND WATERED.

PHASE 2

1. INSTALL UTILITIES, UNDER DRAINS, STORM SEWERS, CURB AND GUTTERS.
2. INSTALL INLET PROTECTION DEVICES.
3. INSTALL RIP RAP AROUND OUTLET STRUCTURES.
4. FINALIZE PAVEMENT SUBGRADE PREPARATION.
5. INSTALL BASE MATERIAL AS REQUIRED FOR PAVEMENT.
6. PAVE LOT.
7. REMOVE TEMPORARY CONSTRUCTION EXITS ONLY PRIOR TO PAVEMENT CONSTRUCTION IN THESE AREAS. (THESE AREAS TO BE PAVED LAST)
8. DISTURBED AREAS OF THE SITE WHERE CONSTRUCTION ACTIVITY HAS CEASED FOR MORE THAN 14 DAYS SHALL BE TEMPORARILY SEEDED AND WATERED.
9. FINE GRADE AND INSTALL PERMANENT SEEDING AND PLANTINGS.
10. REMOVE ALL TEMPORARY EROSION AND SEDIMENT CONTROLS DEVISED. (ONLY IF SITE IS STABILIZED)
11. REMOVE INLET PROTECTIONS AROUND INLETS AND MANHOLES NO MORE THAN 48 HOURS PRIOR TO PLACING STABILIZED BASE COURSE.

CEDAR CREEK
ENGINEERING • PLANNING • CONSULTING
P.O. Box 14534 Oklahoma City, OK 73113
405-778-3385
www.cedarcreekinc.com
OK CA 5864
EXP. 06/30/24

LOCATION MAP:

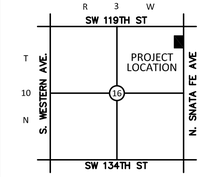

NOT TO SCALE

PROJECT:

HIGHLAND WEST JR. HIGH

MOORE, OK

PROJECT NUMBER: 23069
DRAWING DATE: 07.31.23
ISSUE DATE: 07.31.23

SEAL:

LICENSED PROFESSIONAL ENGINEER
ANDREW WILSON
24273
OKLAHOMA
7.31.23

SUBMITTAL:

PERMIT SET

REVISIONS:

MARK	DATE	DESCRIPTION

THESE PLANS AND DRAWINGS ARE NOT TO BE REPRODUCED, CHANGED OR COPIED IN ANY FORM OR MANNER WHATSOEVER WITHOUT FIRST OBTAINING THE WRITTEN PERMISSION AND CONSENT OF CEDAR CREEK CONSULTING INC. THIS SHEET IS NOT TO BE USED FOR CONSTRUCTION UNLESS THE ISSUE DATE IN THE TITLE BLOCK COINCIDES WITH OR POST DATES THE DRAWING DATE. ANY CHANGES MADE FROM THESE PLANS WITHOUT CONSENT OF CEDAR CREEK CONSULTING INC. ARE UNAUTHORIZED, AND SHALL RELIEVE CEDAR CREEK CONSULTING OF RESPONSIBILITY FOR ALL CONSEQUENCES ARRIVING OUT OF SUCH CHANGES.

DRAWING TITLE:

EROSION CONTROL PLAN

SHEET:

C5.00

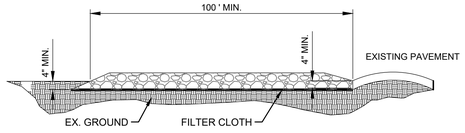

SIDE ELEVATION

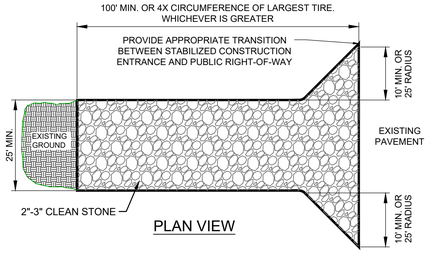

PLAN VIEW

NOTES:

1. STONE - USE COARSE AGGREGATE (2 - 3 INCH STONE)
2. LENGTH - AS EFFECTIVE, BUT NOT LESS THAN 100 FEET.
3. THICKNESS - NOT LESS THAN EIGHT (8) INCHES.
4. WIDTH - NOT LESS THAN FULL WIDTH OF ALL POINTS OF INGRESS OR EGRESS.
5. WASHING - WHEN NECESSARY, WHEELS SHALL BE CLEANED TO REMOVE SEDIMENT PRIOR TO ENTRANCE ONTO PUBLIC RIGHT-OF-WAY. WHEN WASHING IS REQUIRED, IT SHALL BE DONE ON AN AREA STABILIZED WITH CRUSHED STONE WHICH DRAINS INTO AN APPROVED SEDIMENT TRAP OR SEDIMENT BASIN. ALL SEDIMENT SHALL BE PREVENTED FROM ENTERING ANY STORM DRAIN, DITCH, OR WATERCOURSE THROUGH USE OF SAND BAGS, GRAVEL, BOARDS OR OTHER APPROVED METHODS.
6. MAINTENANCE - THE ENTRANCE SHALL BE MAINTAINED IN A CONDITION WHICH WILL PREVENT TRACKING OR FLOWING OF SEDIMENT ONTO PUBLIC RIGHT-OF-WAY. THIS MAY REQUIRE PERIODIC TOP DRESSING WITH ADDITIONAL STONE AS CONDITIONS DEMAND AND REPAIR AND/OR CLEANOUT OF ANY MEASURES USED TO TRAP SEDIMENT. ALL SEDIMENT SPILLED, DROPPED, WASHED OR TRACKED ONTO PUBLIC RIGHTS-OF-WAY MUST BE REMOVED IMMEDIATELY.
7. 12' X 24' METAL GRATE MAY BE USED. GRATE SHALL BE 25' AWAY FROM PAVEMENT AND APPROPRIATE SEDIMENT CONTROL TRAPPING DEVICE SHALL BE USED AT GRATE OUTLET POINT.

STABILIZED CONSTRUCTION ENTRANCE

NOT TO SCALE

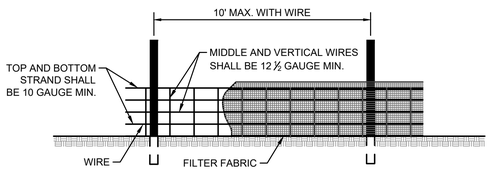

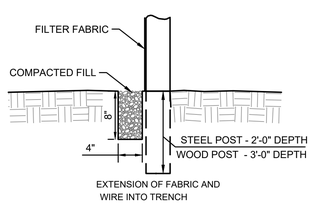

NOTES:

1. WIRE SHALL BE A MINIMUM OF 32" IN WIDTH AND SHALL HAVE A MINIMUM OF 6 LINE WIRES WITH 12" STAY SPACING.
2. FILTER FABRIC SHALL BE A MINIMUM OF 36" IN WIDTH AND SHALL BE FASTENED ADEQUATELY TO THE WIRE.
3. STEEL POST SHALL BE 5'-0" IN HEIGHT AND BE OF THE SELF-FASTENER ANGLE STEEL TYPE.
4. WOOD POST SHALL BE 6'-0" IN HEIGHT AND 3" IN DIAMETER.

SILT FENCE DETAIL

NOT TO SCALE

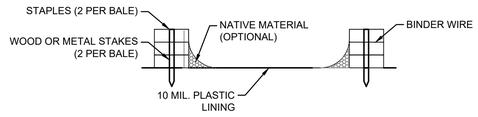

SECTION B-B

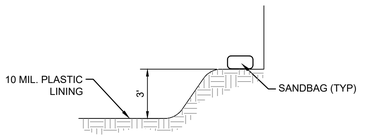

SECTION A-A

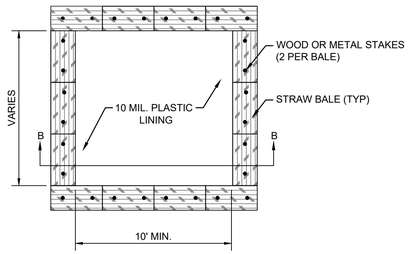

TYPE 'ABOVE GRADE' WITH STRAW BALES

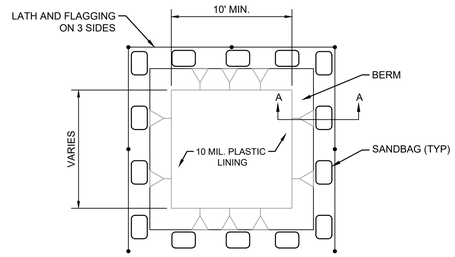

TYPE 'BELOW GRADE'

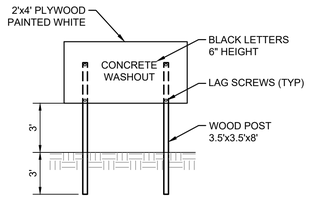

CONCRETE WASHOUT SIGN DETAIL

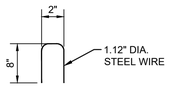

STAPLE DETAIL

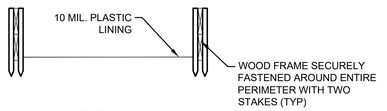

SECTION C-C

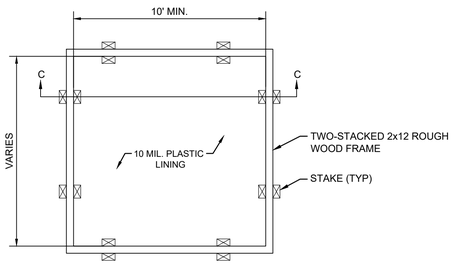

TYPE 'ABOVE GRADE' WITH WOOD PLANKS

NOTES:

1. ACTUAL LAYOUT TO BE DETERMINED IN THE FIELD.
2. A CONCRETE WASHOUT SIGN SHALL BE INSTALLED WITHIN 30' OF THE TEMPORARY CONCRETE WASHOUT FACILITY
3. MATERIALS USED TO CONSTRUCT TEMPORARY CONCRETE WASHOUT FACILITIES SHALL BE REMOVED FROM THE SITE OF THE WORK AND DISPOSED OF OR RECYCLED.
4. HOLES, DEPRESSIONS OR OTHER GROUND DISTURBANCE CAUSE BY THE REMOVAL OF THE TEMPORARY CONCRETE WASHOUT FACILITIES SHALL BE BACKFILLED, REPAIRED AND STABILIZED TO PREVENT EROSION.

CONCRETE WASHOUT DETAIL

NOT TO SCALE

CEDAR CREEK
ENGINEERING • PLANNING • CONSULTING
P.O. Box 14534 Oklahoma City, OK 73113
405-778-3385
www.cedarcreekinc.com
OK CA 5864
EXP. 06/30/24

LOCATION MAP:

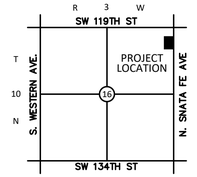

NOT TO SCALE

PROJECT:

HIGHLAND WEST JR. HIGH

MOORE, OK

PROJECT NUMBER:	23069
DRAWING DATE:	07.31.23
ISSUE DATE:	07.31.23

SEAL:

LICENSED PROFESSIONAL ENGINEER
ANDREW WILSON
24213
OKLAHOMA
07.31.23

SUBMITTAL:

PERMIT SET

REVISIONS:

MARK	DATE	DESCRIPTION

THESE PLANS AND DRAWINGS ARE NOT TO BE REPRODUCED, CHANGED OR COPIED IN ANY FORM OR MANNER WHATSOEVER WITHOUT FIRST OBTAINING THE WRITTEN PERMISSION AND CONSENT OF CEDAR CREEK CONSULTING INC. THIS SHEET IS NOT TO BE USED FOR CONSTRUCTION UNLESS THE ISSUE DATE IN THE TITLE BLOCK COINCIDES WITH OR POST DATES THE DRAWING DATE. ANY CHANGES MADE FROM THESE PLANS WITHOUT CONSENT OF CEDAR CREEK CONSULTING INC. ARE UNAUTHORIZED, AND SHALL RELIEVE CEDAR CREEK CONSULTING OF RESPONSIBILITY FOR ALL CONSEQUENCES ARRIVING OUT OF SUCH CHANGES.

DRAWING TITLE:

EROSION CONTROL DETAILS

SHEET:

C5.01

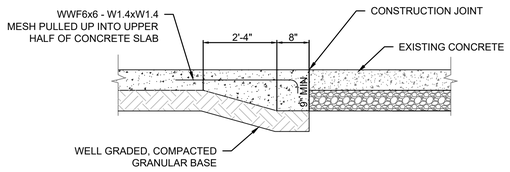

CONCRETE TO CONCRETE THICKENED EDGE

NOT TO SCALE

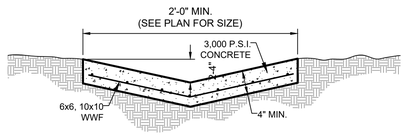

TRICKLE CHANNEL DETAIL

NOT TO SCALE

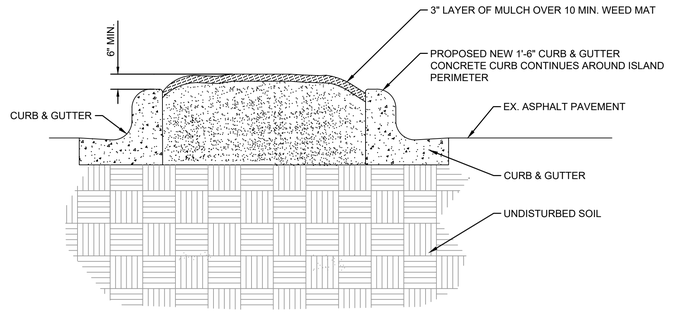

ISLAND DETAIL

NOT TO SCALE

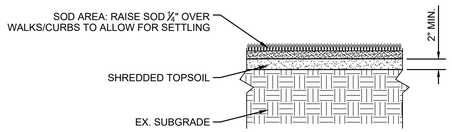

NOTE:
REMOVE WEEDS AND DEBRIS, RAKE ALL SURFACE AREAS SMOOTH PRIOR TO LAYING SOD OR SEEDING. SLOPE TO DRAIN AWAY FROM BUILDINGS. ADHERE TO THE FOLLOWING SUPPLEMENTAL WATERING SCHEDULE (ADJUST AS NEEDED FOR UNSEASONAL RAINFALL CONDITIONS):

APPROXIMATE SUPPLEMENTAL WATER FOR AN AVERAGE TRADITIONAL LAWN (INCHES PER WEEK)						
APRIL	MAY	JUNE	JULY	AUGUST	SEPTEMBER	OCTOBER
0.25"	0.75"	1.25"	1.25"	1.0"	0.75"	0.5"

SOD PLANTING DETAIL

NOT TO SCALE

ALL ADA ACCESSIBLE ROUTES, INCLUDING RAMPS, CURB RAMPS AND SIDEWALKS SALL NOT EXCEED 1:48 (1/4"/ft) (2.083% SLOPE AT ANY POINT. CROSS SLOPE IS THE SLOPE PERPENDICULAR TO THE DIRECTION OF TRAVEL.

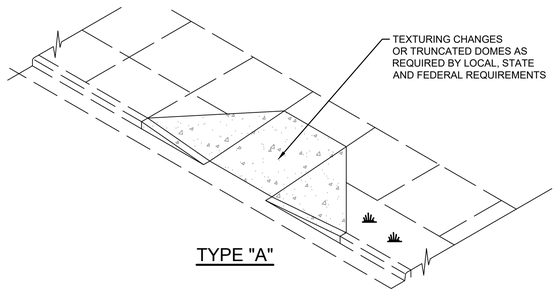

TYPE "A"

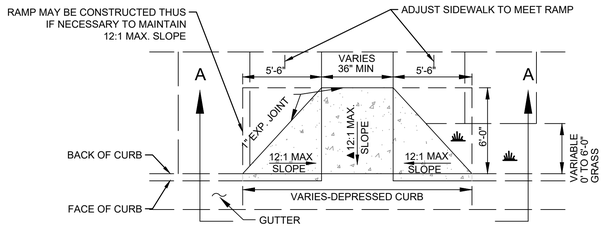

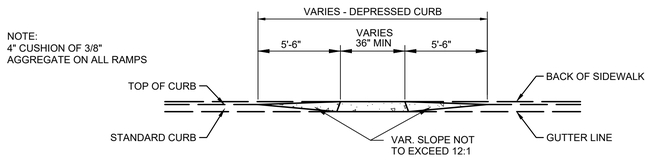

SECTION A-A

ADA RAMP DETAIL

NOT TO SCALE

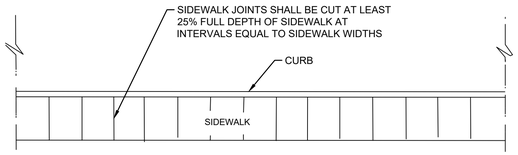

PLAN

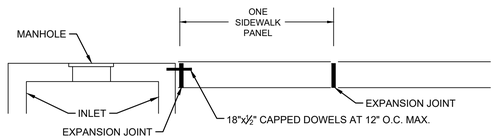

SIDEWALK AT INLETS

NOTE:
- 1/2" EXPANSION JOINT SPACING AT 60' OR ADJACENT TO STRUCTURES AND DRIVES.
- SIDEWALK EXPANSION MATERIAL IS REQUIRED BETWEEN SIDEWALK AND CURB (REQUIRES PRIOR APPROVAL FOR ADJACENT TO CURB LOCATIONS).
- DOWEL BARS WITH EXPANSION JOINT MATERIAL REQUIRED AT INLETS.

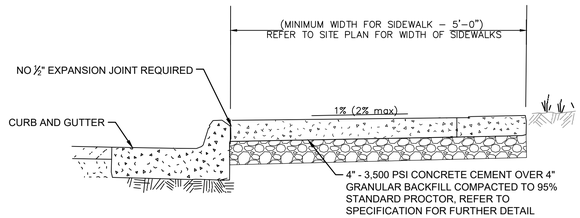

SECTION

EXPANSION JOINT SHALL BE INSTALLED BETWEEN PUBLIC SIDEWALKS AND PRIVATE SIDEWALKS, BUILDINGS OR DRIVEWAYS

SIDEWALK DETAIL

NOT TO SCALE

CEDAR CREEK
ENGINEERING • PLANNING • CONSULTING
P.O. Box 14534 Oklahoma City, OK 73113
405-778-3385
www.cedarcreekinc.com
OK CA 5864
EXP. 06/30/24

LOCATION MAP:

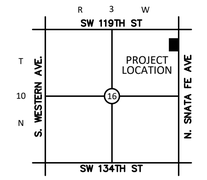

NOT TO SCALE

PROJECT:

HIGHLAND WEST JR. HIGH

MOORE, OK

PROJECT NUMBER: 23069
DRAWING DATE: 07.31.23
ISSUE DATE: 07.31.23

SEAL:

SUBMITTAL:

PERMIT SET

REVISIONS:

MARK	DATE	DESCRIPTION

THESE PLANS AND DRAWINGS ARE NOT TO BE REPRODUCED, CHANGED OR COPIED IN ANY FORM OR MANNER WHATSOEVER WITHOUT FIRST OBTAINING THE WRITTEN PERMISSION AND CONSENT OF CEDAR CREEK CONSULTING INC. THIS SHEET IS NOT TO BE USED FOR CONSTRUCTION UNLESS THE ISSUE DATE IN THE TITLE BLOCK COINCIDES WITH OR POST DATES THE DRAWING DATE. ANY CHANGES MADE FROM THESE PLANS WITHOUT CONSENT OF CEDAR CREEK CONSULTING INC. ARE UNAUTHORIZED, AND SHALL RELIEVE CEDAR CREEK CONSULTING OF RESPONSIBILITY FOR ALL CONSEQUENCES ARRIVING OUT OF SUCH CHANGES.

DRAWING TITLE:

STANDARD DETAILS

SHEET:

C6.00

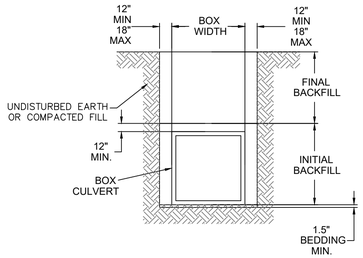

CONCRETE BOX CULVERT

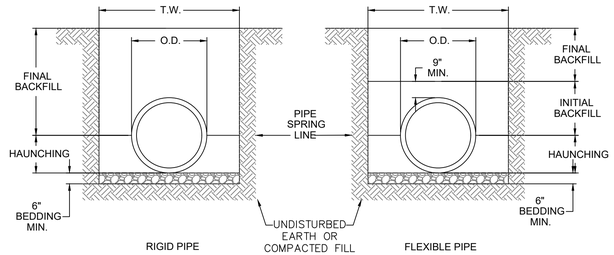

(RCP) OR (CMP & SPIRAL RIB ≤48"Ø) (HDPE) OR (PVC) OR (CMP > 48"Ø)

1. BEDDING SHALL BE DUMPED CLASS I-A WORKED BY HAND, OR CLASS I-B COMPACTED TO 85% STANDARD PROCTOR. LOCAL CODE PERMITTING WITH GEOTECHNICAL ENGINEER AND OWNER APPROVAL, NATIVE SOIL MAY BE USED FOR BEDDING PROVIDED IT MEETS THE EMBEDMENT AND BACKFILL MATERIALS IN TABLE 1 EXCLUDING CLASS IV-A.
2. HAUNCHING SHALL BE WORKED AROUND THE PIPE BY HAND TO ELIMINATE VOIDS AND SHALL BE CLASS I-A, OR CLASS I-B OR CLASS II COMPACTED TO 95% STANDARD PROCTOR. PEA GRAVEL SHALL NOT BE USED AS A HAUNCHING MATERIAL. CLASS III MATERIAL SHALL BE ALLOWED FOR RIGID PIPE COMPACTED AT 95% STANDARD PROCTOR.
3. INITIAL BACKFILL SHALL BE CLASS I-A WORKED BY HAND, OR CLASS I-B OR CLASS II COMPACTED TO 90% STANDARD PROCTOR, OR CLASS III COMPACTED 95% STANDARD PROCTOR. CLASS I & II MATERIAL SHALL BE USED FOR FLEXIBLE PIPE WHEN FILL HEIGHTS EXCEED 8'.
4. FINAL BACKFILL SHALL BE CLASS I-A WORKED BY HAND, OR CLASS I-B OR CLASS II COMPACTED TO 90% STANDARD PROCTOR, OR CLASS III COMPACTED TO 95% STANDARD PROCTOR.
5. FINAL BACKFILL NOT UNDER PAVED AREAS CAN BE CLASS IV-A COMPACTED TO 95% STANDARD PROCTOR.
6. ALL MATERIALS ARE CLASSIFIED IN ACCORDANCE WITH ASTM D 2321. (SEE TABLE 1)
7. ALL MATERIALS SHALL BE INSTALLED IN MAXIMUM 8" LOOSE LIFTS IN ACCORDANCE WITH ASTM D 698. CLASS III AND IV-A MATERIALS SHALL BE COMPACTED NEAR OPTIMUM MOISTURE CONTENT.
8. FILL SALVAGED FROM EXCAVATION SHALL BE FREE OF DEBRIS, ORGANICS AND ROCKS LARGER THAN 3".
9. ALL TRENCH EXCAVATIONS SHALL BE SLOPED, SHORED, SHEETED, BRACED, OR OTHERWISE SUPPORTED IN COMPLIANCE WITH OSHA REGULATIONS AND LOCAL ORDINANCES.
10. DESIGN ENGINEER SHALL DESIGNATE ON THE PLANS WHERE WATERTIGHT JOINTS ARE TO BE REQUIRED.
11. REPLACE WET OR UNSUITABLE SOIL AS NECESSARY TO PROVIDE A SUITABLE BASE, AS DIRECTED BY GEOTECHNICAL ENGINEER OR OWNER.
12. WHERE GROUND WATER IS PRESENT CLASS I-A MATERIAL SHALL BE WRAPPED WITH A NON-WOVEN GEO-TEXTILE, EXCLUDING BEDDING MATERIAL BETWEEN 4" & 6" THICK.
13. CONTRACTOR SHALL REFER TO GEOTECHNICAL REPORT FOR SOIL TYPE AND CLASSIFICATIONS FOR THIS PROJECT.
14. CONTRACTOR SHALL REFER TO THE LATEST VERSION OF ASTM STANDARDS PRIOR TO CONSTRUCTION.

TABLE 1: CLASSES OF EMBEDMENT AND BACKFILL MATERIALS

ASTM D 2321 MATERIAL CLASS	ASTM D 2487 USCS SOIL GROUP	MATERIAL TYPE	% PASSING			ATTERBERG LIMITS	
			1 1/2 IN.	NO. 4	NO. 200	LL	PI
IA	NONE	MANUFACTURED OPEN GRADED AGGREGATES	100%	≤10%	<5%	NON PLASTIC	
IB	NONE	MANUFACTURED DENSE GRADED AGGREGATES	100%	≤50%	<5%	NON PLASTIC	
II	GW	COARSE-GRAINED SOILS, CLEAN	100%	<50% OF "COARSE FRACTION"	<5%	NON PLASTIC	
	GP						
	SW			>50% OF "COARSE FRACTION"			
	SP						
III	GM	COARSE-GRAINED SOILS W/ FINES	100%	<50% OF "COARSE FRACTION"	12% TO 50%		<4 OR <"A" LINE
	GC						<7 OR >"A" LINE
	SM			>50% OF "COARSE FRACTION"			>4 OR <"A" LINE
	SC						>7 OR >"A" LINE
IV-A	ML	FINE-GRAINED SOILS	100%	100%	>50%	<50	<4 OR <"A" LINE
	CL						>7 OR >"A" LINE

TRENCH AND BEDDING DETAILS

NOT TO SCALE

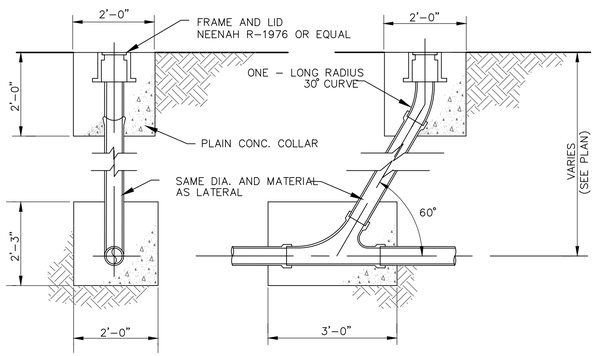

TYPICAL CLEANOUT DETAIL

NOT TO SCALE

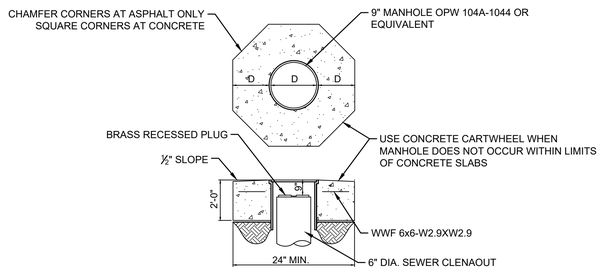

TYPICAL CLEANOUT MANHOLE DETAIL

NOT TO SCALE

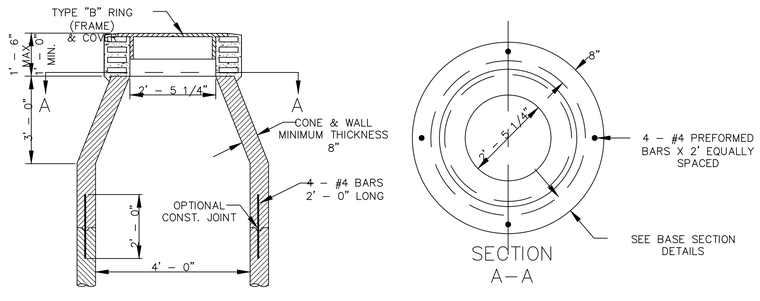

CAST-IN-PLACE NON-REINFORCED MANHOLE-PIPE CONNECTION

NOTE:

1. ALL PIPE SHALL BE STAINLESS STEEL
2. NEOPRENE--EPDM BLENDED COMPOUND BOOT SHALL MEET ASTM C-923

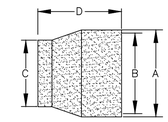

SUGGESTED PIPE O.D. RANGE (IN.)	HOLE & BOOT DIAMETER DIMENSIONS			
	A	B	C	D
3 1/2" - 4 1/2"	7"	6 1/8"	4 1/4"	6"
5 3/8" - 7"	12"	10 7/8"	6 1/2"	8"
7" - 8 1/2"	12"	10 7/8"	8"	8"
8 3/16" - 9 3/4"	12"	10 7/8"	9 1/4"	8"
9 1/4" - 11"	16"	14 7/8"	10 1/2"	8"
10 1/4" - 11"	16"	14 7/8"	12"	8"
12" - 13 3/4"	16"	14 7/8"	13 1/4"	8"
14 1/2" - 16 1/4"	20"	18 7/8"	15 3/4"	8"
15 3/4" - 17 1/2"	20"	18 7/8"	17"	8"
19 1/2" - 21 1/4"	24"	22 7/8"	20 3/4"	8"

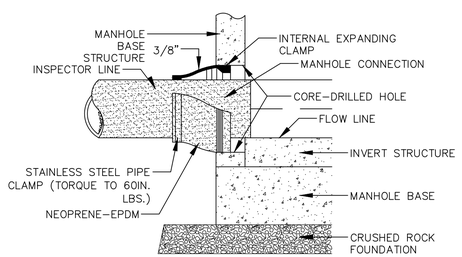

CONCENTRIC MANHOLE DETAIL

NOT TO SCALE

CEDAR CREEK
ENGINEERING • PLANNING • CONSULTING
P.O. Box 14534 Oklahoma City, OK 73113
405-778-3385
www.cedarcreekinc.com
OK CA 5864
EXP. 06/30/24

LOCATION MAP:

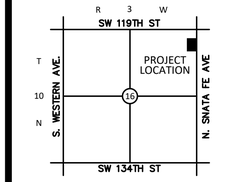

NOT TO SCALE

PROJECT:

HIGHLAND WEST JR. HIGH

MOORE, OK

PROJECT NUMBER: 23069
DRAWING DATE: 07.31.23
ISSUE DATE: 07.31.23

SEAL:

SUBMITTAL:

PERMIT SET

REVISIONS:

MARK	DATE	DESCRIPTION

THESE PLANS AND DRAWINGS ARE NOT TO BE REPRODUCED, CHANGED OR COPIED IN ANY FORM OR MANNER WHATSOEVER WITHOUT FIRST OBTAINING THE WRITTEN PERMISSION AND CONSENT OF CEDAR CREEK CONSULTING INC. THIS SHEET IS NOT TO BE USED FOR CONSTRUCTION UNLESS THE ISSUE DATE IN THE TITLE BLOCK COINCIDES WITH OR POST DATES THE DRAWING DATE. ANY CHANGES MADE FROM THESE PLANS WITHOUT CONSENT OF CEDAR CREEK CONSULTING INC. ARE UNAUTHORIZED, AND SHALL RELIEVE CEDAR CREEK CONSULTING OF RESPONSIBILITY FOR ALL CONSEQUENCES ARRIVING OUT OF SUCH CHANGES.

DRAWING TITLE:

STANDARD DETAILS

SHEET:

C6.01

SCALE: 1"=30'

0 30 60

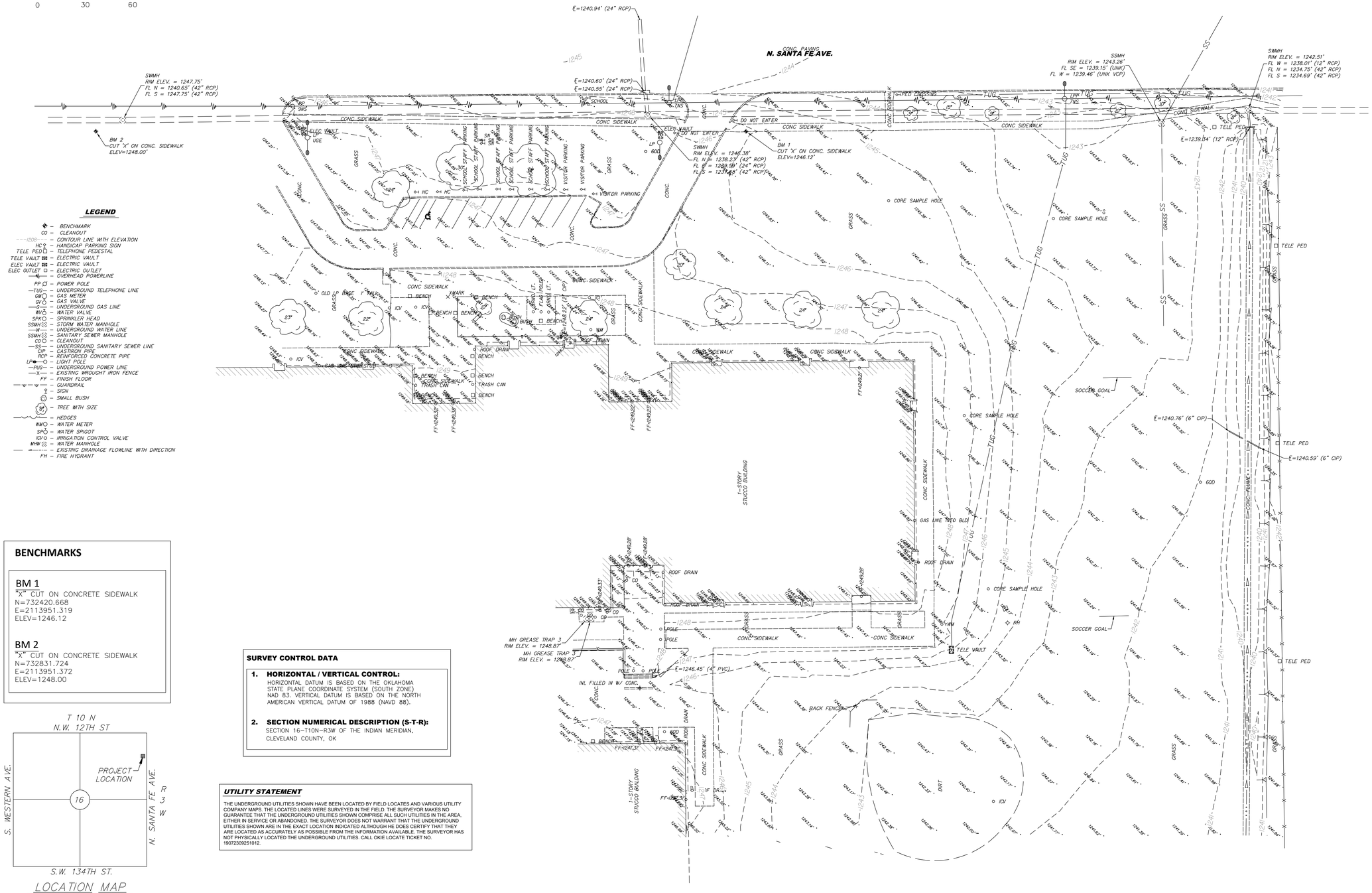

LEGEND

- BENCHMARK
- CO – CLEANOUT
- 1208 – CONTOUR LINE WITH ELEVATION
- HC – HANDICAP PARKING SIGN
- TELE PED – TELEPHONE PEDESTAL
- TELE VAULT – ELECTRIC VAULT
- ELEC VAULT – ELECTRIC VAULT
- ELEC OUTLET – ELECTRIC OUTLET
- OHP – OVERHEAD POWERLINE
- PP – POWER POLE
- TUG – UNDERGROUND TELEPHONE LINE
- GM – GAS METER
- GV – GAS VALVE
- UGG – UNDERGROUND GAS LINE
- WV – WATER VALVE
- SPK – SPRINKLER HEAD
- SSMH – STORM WATER MANHOLE
- UW – UNDERGROUND WATER LINE
- SSMH – SANITARY SEWER MANHOLE
- CO – CLEANOUT
- SS – UNDERGROUND SANITARY SEWER LINE
- CIP – CASTIRON PIPE
- RCP – REINFORCED CONCRETE PIPE
- LP – LIGHT POLE
- PUG – UNDERGROUND POWER LINE
- X – EXISTING WROUGHT IRON FENCE
- FF – FINISH FLOOR
- GUARDRAIL
- SIGN
- SMALL BUSH
- TREE WITH SIZE
- HEDGES
- WM – WATER METER
- SP – WATER SPIGOT
- ICV – IRRIGATION CONTROL VALVE
- MH – WATER MANHOLE
- EXISTING DRAINAGE FLOWLINE WITH DIRECTION
- FH – FIRE HYDRANT

BENCHMARKS

BM 1
"X" CUT ON CONCRETE SIDEWALK
N=732420.668
E=2113951.319
ELEV=1246.12

BM 2
"X" CUT ON CONCRETE SIDEWALK
N=732831.724
E=2113951.372
ELEV=1248.00

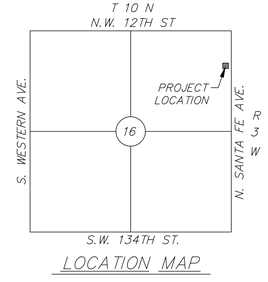

LOCATION MAP

SURVEY CONTROL DATA

1. **HORIZONTAL / VERTICAL CONTROL:**
   HORIZONTAL DATUM IS BASED ON THE OKLAHOMA STATE PLANE COORDINATE SYSTEM (SOUTH ZONE) NAD 83. VERTICAL DATUM IS BASED ON THE NORTH AMERICAN VERTICAL DATUM OF 1988 (NAVD 88).

2. **SECTION NUMERICAL DESCRIPTION (S-T-R):**
   SECTION 16–T10N–R3W OF THE INDIAN MERIDIAN, CLEVELAND COUNTY, OK

UTILITY STATEMENT

THE UNDERGROUND UTILITIES SHOWN HAVE BEEN LOCATED BY FIELD LOCATES AND VARIOUS UTILITY COMPANY MAPS. THE LOCATED LINES WERE SURVEYED IN THE FIELD. THE SURVEYOR MAKES NO GUARANTEE THAT THE UNDERGROUND UTILITIES SHOWN COMPRISE ALL SUCH UTILITIES IN THE AREA, EITHER IN SERVICE OR ABANDONED. THE SURVEYOR DOES NOT WARRANT THAT THE UNDERGROUND UTILITIES SHOWN ARE IN THE EXACT LOCATION INDICATED ALTHOUGH HE DOES CERTIFY THAT THEY ARE LOCATED AS ACCURATELY AS POSSIBLE FROM THE INFORMATION AVAILABLE. THE SURVEYOR HAS NOT PHYSICALLY LOCATED THE UNDERGROUND UTILITIES. CALL OKIE LOCATE TICKET NO. 190723092510 12.

COWAN GROUP ENGINEERING
7100 N CLASSEN, SUITE 500
OKLAHOMA CITY, OK 73116
405-463-3369 O 405-463-3381 F
WWW.COWANGROUP.CO
CA# 6414 EXPIRES 6/30/2022

MOORE PUBLIC SCHOOL

HIGHLAND WEST JUNIOR HIGH SCHOOL
901 N. SANTA FE AVE, MOORE, OK 73160

TOPOGRAPHIC SURVEY

SURVEYED BY	JRS
DRAWN BY	LC
REVIEWED BY	JWS
PROJECT NUMBER	19-790
DATE	05/17/2021

REVISIONS

SHEET NUMBER 1 OF 1

PLOTTED: May 18, 2021

S:\SURVEY\RAW FILES\19-790 AGR ON-DEMAND SURVEY\HIGHLAND WEST\CAD\AGR-HIGHLAND WEST-051821.DWG